BLU-JET

AT7000™

33R30
37R30
49R20

Assembly and Operators Manual

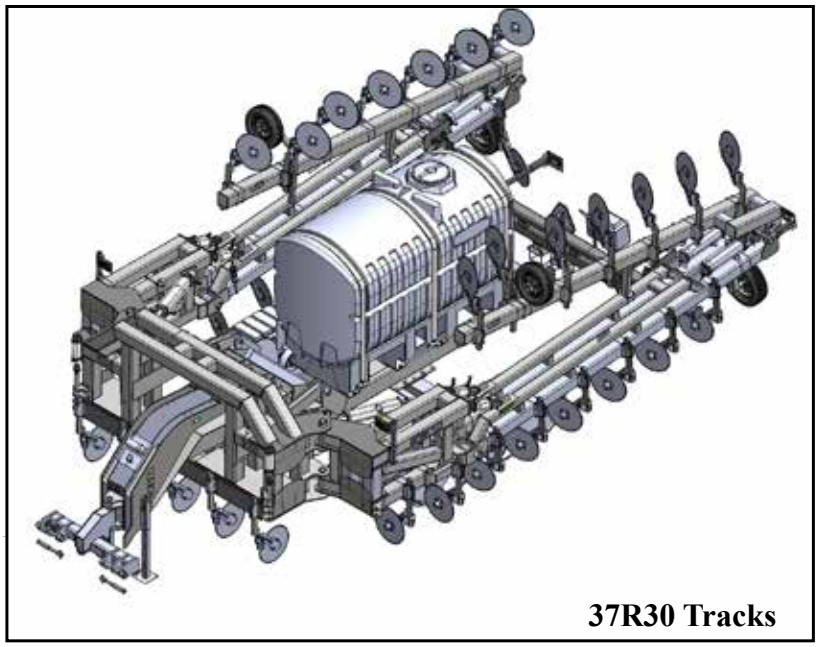

37R30 Tracks

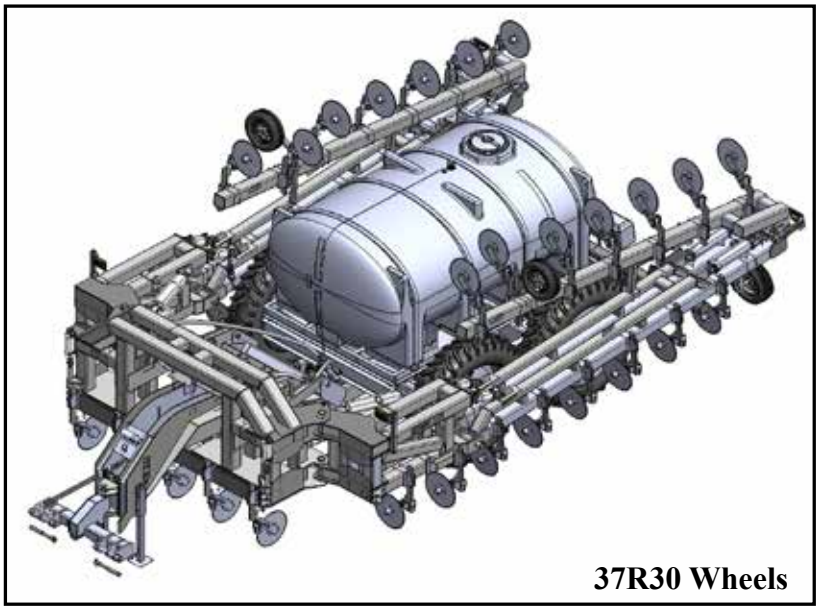

37R30 Wheels

Manual Number
0607090
12-14-15

All Terrain Liquid Fertilizer Injection Toolbar

$20.00 Net.

Thurston™
Manufacturing Company

Thurston Manufacturing Company *• 1708 H Ave • Box 218 • Thurston, Nebraska, 68062-0218*
Phone: *402-385-3041 •* ***Fax:*** *402-385-3043 •* ***E-mail:*** *box218@thurstonmfgco.com*

Design specifications and features as described are subject to change without notice. BLU-JET is a registered trademark of Thurston Manufacturing Company, Thurston NE.

/BLU-JET **@BLU-JET01** **/SIronWorks** **@SIronWorks**

AT7000 Table of Contents

Manual Number 0607090
12-14-15

► **Introduction** **2**
► **Delivery** **4**
► **To The Owner** **5**
► **Warranty** **6**
► **Safety** **7**
► **Operating Instruction** **11**
Hook-up 11
Folding 13
Depth Collars 15
Coulter Adjustment 16
Gauge Wheel Adjustment 16
Lubrication 17
High Pressure Injection System Calculations 20
30 Inch Spacing Rate Chart 22
HyPro Centrifugal Pumps Manual 23
Bottom Fill 51
Emergency Tank 53
Row Spacing (37R30), (33R30), (49R20) 54
► **Parts**
AT7000 Cart Frame (77000103) 60
Track Assembly (77000107) 63
Rocker Wheel Assembly (77000108) 64
881 Hub and 4-1/2” Spindle Assembly (AP4377) 65
380/85R46 Wheels (AAM4880 and AAM4881) 66
Center Section (PKG00212) 68
Primary Wing (PKG00213) 69
Secondary Wing (PKG00214) 70
Third Wing 90’(PKG00215), 80’ (PKG00241) 72
Hydraulic Package (PKG00216) 76
Hydraulic Hose Kit (DDP1153) 81
Package , Liquid Misc. (PKG00217) 86
Rear Fold Wing Stop (AAM4864) 87
Transport Rest 88
Safety Tank 89
Super 1200 Coulter and Shank Parts 90
Coulter Flatbacks 91
Vertical Pin Adjust Gauge Wheel 92
AAM2707 Hub and Spindle Assembly 93
Gauge Wheels 94
Gauge Wheel Hub and Spindle Assembly 95
Decals and Manual Holder 96
Light Kit 99
Centrifugal Pump and Plumbing (77000106),(77000113),(77000110) 104
Jet Stream Liquid Assembly (AAM3353) 118
Jet Stream Coulter Knife Assembly (AAM3356) 120
Specifications 122
Torque Specifications 123
Tie-rod Cylinder Disassembly-Assembly Procedure 124
Hydraulic Cylinders and Parts 125
20 Inch Spacing Rate Chart 126
► **Assembly**
Main Frame 127
Wheel Assembly and Mounting 127
Track Assembly and Mounting 133
Frame Connector 135
Tongue 136
Lower Lift Arms 137
Lift Cylinders 138
Upper Lift Arms 139
Center Section 140
Park Stands 142
Transport Rest 143
Primary Wings 144
Secondary Wings 145
Third Wings 146
Two Point Pivot Hitch 147
Two Point CAT IV Hitch 148
Primary Wing Cylinders 149
Secondary Wing Lift Cylinders 150
Secondary Wing Linkage 151
Transport Lock 152
Wing Latch 153
Primary Wing Fold Cylinder Fittings 154
Wing Lock and Transport Lock Cylinder Fittings 155
Lift Cylinder Fittings 156
Secondary Wing Cylinder Fittings 157
Third Wing Cylinder Fittings 158
Primary Wing Hose Holders and Depth Collar Holders 159
Hose Retainers 160
Tongue Bulkhead Union Installation 161
Lift Cylinder Hydraulic Hoses 162
Secondary Wing Hydraulic Hoses 163
Primary Wing Hydraulic Hoses 164
Transport Lock Hydraulic Hoses 165
Third Wing Hydraulic Hoses 166
Wing Lock Cylinder Hydraulic Hoses 168
Tee Stacked Hydraulic Hoses to Bulkhead Unions 169
Bulkhead Unions Hydraulic Hoses to Tractor 171
Light Kit 172
SMV 179
Safety Tank 184
Coulter Assembly 185
Flatbacks 186
Coulter Mounting 187
Gauge Wheel 188
Vertical Pin Adjust Gauge Wheel 189
JetStream Injection 191
Center Section, Manifold and 3/4” Suction Hoses 198
Primary Wings, Manifold and 3/4” Suction Hoses 200
Secondary Wings, Manifold and 3/4” Suction Hoses 202
Third Wings, Manifold and 3/4” Suction Hoses 204
Centrifugal Pump and Plumbing 206
Third Wings, 1” Rubber Hoses Left-hand 220
Secondary Wings, 1” Rubber Hoses Left-hand 221
Center Section, 1” Rubber Hoses 222
Secondary Wings, 1” Rubber Hoses Right-hand 223
Third Wings, 1” Rubber Hoses Right-hand 224
Centrifugal Pump Hydraulic Hoses 225
Storage **226**

Introduction

AT7000

Welcome to Thurston Manufacturing Company. Our goal is to provide quality products and services to our customers. The company's BLU-JET products have a reputation for quality, excellence in design and proven durability. Energetic, resourceful and continuous improvement goals in Environmental, Safety, Quality, Production and Engineering keep our firm at the cutting edge of technology.
We hope your BLU-JET equipment will give you years of service.

Read this manual carefully. It will instruct you on how to operate and service your machine safely and correctly. Failure to do so could result in personal injury and/or equipment damage.

SAFETY INFORMATION

DANGER Indicates an imminently hazardous situation that, if not avoided, will result in death or serious injury. The sign will have the color combination of *red* and *white*.

WARNING Indicates a potentially hazardous situation that, if not avoided, could result in death or serious injury. The sign will have the color combination of *orange* and *black*.

CAUTION Indicates a potentially hazardous situation that, if not avoided, may result in minor or moderate injury. The sign will have the color combination of *yellow* and *black*.

NOTE: *Indicates a special point of information.*

Carefully read and follow all safety signs. Reinstall safety signs that are damaged or missing.

Right-hand and left-hand sides of the implement are determined by facing in the direction the implement will travel when going forward.

Introduction

► General Information:

The BLU-JET AT7000 tool bar has a 2750 gallon on walking tandems. The rearward folding toolbar has a transport width under eighteen feet. The 90' tool bar can be operated on either 90' or 60' widths. The 80' tool bar can be operated on either 80' or 60' widths. The AT7000 is currently available to match 60', 80', and 90' swath widths on 30" and 20" row spacing.

The gull wing lift design provides additional crop clearance during turn-around. High flotation tires or tracks reduce the risk of deep compaction within the soil profile. The AT7000 is designed for BLU-JET's JetStream coulter injection or coulter knife injection.

► **Warranty is provided for customers who operate and maintain their equipment as described in this manual. Warranty registration is accomplished by the dealer completing and forwarding the WARRANTY REGISTRATION FORM to Thurston Manufacturing Company. It is in your best interest to ensure that this has been done.**

► **For your convenience we have four easy ways to register your warranty.**

- ***Call our toll free number and ask for warranty registration. 1-800-658-3127***
- ***Fax completed warranty registration form. Fax: 402-385-3043***
- ***Register on-line in warranty page at www.blu-jet.com***
- ***Complete and return registration form.***

Thurston Manufacturing Company Warranty does not cover the following:

1) **Cleaning, transporting, mailing and service call charges.**
2) **Depreciation or damage caused by normal wear, accidents, improper protection or improper use.**

See complete Warranty for details.

Serial Number **location**

► **Record your implement model and serial number in the space provided below. Your dealer needs this information to give you prompt, efficient service when you order parts.**

MODEL NO._____

SERIAL NO._____

DATE PURCHASED_____

Dealer Checklist

AT7000

► **To The Dealer:**
Inspect the implement thoroughly after assembly to be certain it is functioning properly before delivering it to the customer. The following checklist is a reminder of points to cover. Check off each item as it is found satisfactory or after proper adjustment is made.

► PRE-DELIVERY CHECKLIST

- ○ 1. All hardware properly tightened
- ○ 2. Lubrication of grease fittings
- ○ 3. All decals properly located and readable
- ○ 4. Other adjustments for machine level height, etc.
- ○ 5. Overall condition (touch up any scratches, clean and polish)
- ○ 6. Operator's manual

DATE SET UP_____
SIGNATURE_____

► DELIVERY

Review the operator's manual with the customer. Explain the following:

- ○ 1. Safe operation and service
- ○ 2. Correct machine installation and operation
- ○ 3. Daily and periodic lubrication and maintenance
- ○ 4 Daily and periodic inspections
- ○ 5. Troubleshooting
- ○ 6. Storing machine
- ○ 7. Thurston Manufacturing Company parts and service
- ○ 8. Have the customer write the machine model and serial number in space provided in manual introduction.
- ○ 9. Give customer the operator's manual and encourage the customer to read the manual carefully.
- ○ 10. Completion and mailing of warranty registration form.

DATE DELIVERED_____
SIGNATURE_____
MODEL NO._____
SERIAL NO._____

To The Owner

► **Thank you for your recent purchase of a new BLU-JET implement. The primary objective of Thurston Manufacturing Company is to build and provide you with a quality product. However, in the event that a problem does occur, it is imperative that your warranty registration is on file in order to accurately respond to your specific service circumstances. For your convenience we have four easy ways to register your warranty:**

Register Warranty One of Four Ways

- **Call our toll free number and ask for warranty registration.**
  1-800-658-3127
- **Fax your completed warranty registration form.**
  1-402-385-3043
- **Register on-line at:**
  www.blu-jet.com
- **Complete and mail the warranty registration form.**

This manual has been prepared to assist you in the assembly of your new machine and contains information pertaining to safety, operation and all of its parts. Our personnel in sales and service are always available to assist you when questions arise concerning the assembly or operation of your tool bar.

When ordering parts, please refer to part numbers and descriptions as listed throughout this book. All parts and whole goods will be shipped FOB Thurston, Nebraska, or FOB your regional distributor. Always check merchandise immediately upon receipt for damage or shortage. Note any discrepancy on carrier's bill of lading and notify Sender within 10 days. Returned goods will be subject to a 15% restocking charge. Thurston Manufacturing Company reserves the right to make improvements and modifications on equipment without obligation to change previously built equipment. All prices are subject to change without notice.

Limited Warranty

AT7000

Thurston Manufacturing Company warrants each new BLU-JET machine primary framework to be free from defects in material and workmanship for a period of five (5) years, normal wear of wearing parts excepted. Thurston Manufacturing Company further warrants each new BLU-JET product to be free from defects in material and workmanship, normal wear of wearing parts excepted, for a period of one (1) year. All accessories purchased and resold by Thurston Manufacturing Company will be warranted according to their respective manufacturer. Tires on BLU-JET equipment are warranted through their respective tire manufacturers and their network of dealers in your local area.

Warranty begins from date of delivery to the original purchaser and applies to all new BLU-JET products that have not been altered and are being used for the intended purpose. Negligence, abuse or modification of equipment manufactured by or purchased and resold by Thurston Manufacturing Company will void this warranty.

The obligation of Thurston Manufacturing Company to honor this warranty is limited to the repair or replacement of defective merchandise, to the original purchaser, subject to inspection of equipment in question by an authorized Thurston Manufacturing Company sales or service technician. In the USA, freight of warranty replacement parts including main frame centers and wings will be prepaid for a period of one (1) Year by Thurston Manufacturing Company. Shipments of repaired or replaced parts including main frame centers and wings after one year will be paid by the customer.

Return of defective goods must be made within thirty (30) days of failure to Thurston Manufacturing Company, Thurston, Nebraska USA or to the nearest authorized BLU-JET Distributor or Rep Sales and service outlet.

Thurston Manufacturing Company will not be held responsible for any repair charges made by customers without prior written consent and prior equipment inspection by an authorized Thurston Manufacturing Company sales or service technician.

This warranty shall not be interpreted to render liability for injury or damages of any kind, direct, consequential or contingent to person or property. This warranty does not extend to loss of crops, economic and/or commercial loss, loss because of delay in crop production or any expense incurred for labor, supplies, substitute machinery, rental or for any other reason. This warranty is subject to any existing condition of supply, which may directly affect Thurston Manufacturing Company's ability to obtain materials of manufacture and delivery of replacement parts.

Thurston Manufacturing Company reserves the right to make improvements in design and changes in specifications at any time without incurring any obligation to owners of units previously sold.

No one is authorized to alter, modify or enlarge this warranty nor its exclusions, limitations and reservations. Thurston Manufacturing Company makes no representations or warranties, expressed or implied (including implied warranties of merchantability and fitness), except for those set forth in Thurston Manufacturing Company's current applicable published warranty policies and procedures.

Layton W. Jensen, President 022398\mgmt

RECOGNIZE SAFETY INFORMATION

- This is the safety-alert symbol. When you see his symbol on your machine or in this manual, be alert to the potential for personal injury. Follow recommended precautions and safe operating practices.

FOLLOW SAFETY INSTRUCTIONS

- Carefully read all safety messages in this manual and on your machine safety signs. Keep safety signs in good condition. Replace missing or damaged safety signs.
- Learn how to operate the machine and how to use controls properly.
- Do not let anyone operate without instruction.
- Keep your machine in proper working condition.
- Unauthorized modification to the machine may impair the function and/or safety and affect machine life.

PROTECT CHILDREN AND BYSTANDERS

- Before you back, LOOK CAREFULLY behind for children.
- Clear area of children, pets and bystanders.

HIGHWAY AND TRANSPORT OPERATIONS

Adopt safe driving practices:

- Keep the brake pedals latched together at all times. NEVER USE INDEPENDENT BRAKING WITH MACHINE IN TOW AS LOSS OF CONTROL AND/OR UPSET OF UNIT CAN RESULT.
- Always drive at a safe speed relative to local conditions and ensure that your speed is low enough for a emergency stop to be safe and secure. Keep speed to a minimum.
- Reduce speed prior to turns to avoid the risk of overturning.
- Avoid sudden uphill turns on steep slopes.
- Always keep the tractor or towing vehicle in gear to provide engine braking when going downhill. Do not coast.
- Do not drink and drive.
- Comply with state and local laws governing highway safety and movement of farm machinery on public roads.
- Use approved accessory lighting and necessary warning devices to protect operators of other vehicles on the highway during daylight and nighttime transport.
- The use of flashing amber lights is acceptable in most localities. However, some localities prohibit their use. Local laws should be checked for all highway lighting and marking requirements.
- When driving the tractor and equipment on the road or highway under (20 mph max.) (32 kmph max.) at night or during the day, use flashing amber warning lights and a slow moving vehicle (SMV) identification emblem.

WARNING

Transport with a empty tank

HIGHWAY AND TRANSPORT OPERATIONS

- Plan your route to avoid heavy traffic.
  - Be a safe and courteous driver. Always yield to oncoming traffic in all situations, including narrow bridges, intersection, etc.
  - Be observant of bridge loading ratings. Do not cross bridges rated lower than the gross weight at which you are operating.
  - Always operate equipment in a position to provide maximum visibility at all times. Makes allowances for increased length and weight of the equipment when making turns, stopping the unit, etc.

TRANSPORT SAFETY

- Use transport lock during road transportation.
- **Maximum recommended road speed is (20 mph max.) (32 kmph max.) with an empty tank.**

AVOID HIGH PRESSURE FLUIDS

- Escaping fluid under pressure can penetrate the skin causing serious injury.
- Avoid the hazard by relieving pressure before disconnecting hydraulic or other lines. Tighten all connections before applying pressure.
- Search for leaks with a piece of cardboard.
- Protect hands and body from high pressure fluids.
- If an accident occurs, see a doctor immediately.

DISPOSE OF FLUIDS PROPERLY

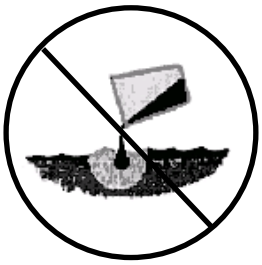

- Improperly disposing of fluids can harm the environment and ecology. Before draining any fluids, contact your local environmental agency for the proper waste disposal methods.
- Use proper container when draining fluids. Do not use food or beverage containers that may mislead someone into drinking from them.
- DO NOT pour oil into the ground, down a drain, or into a stream, pond, or lake. Observe relevant environmental protection regulations when disposing of oil and other harmful waste.

Observe Safety Signs

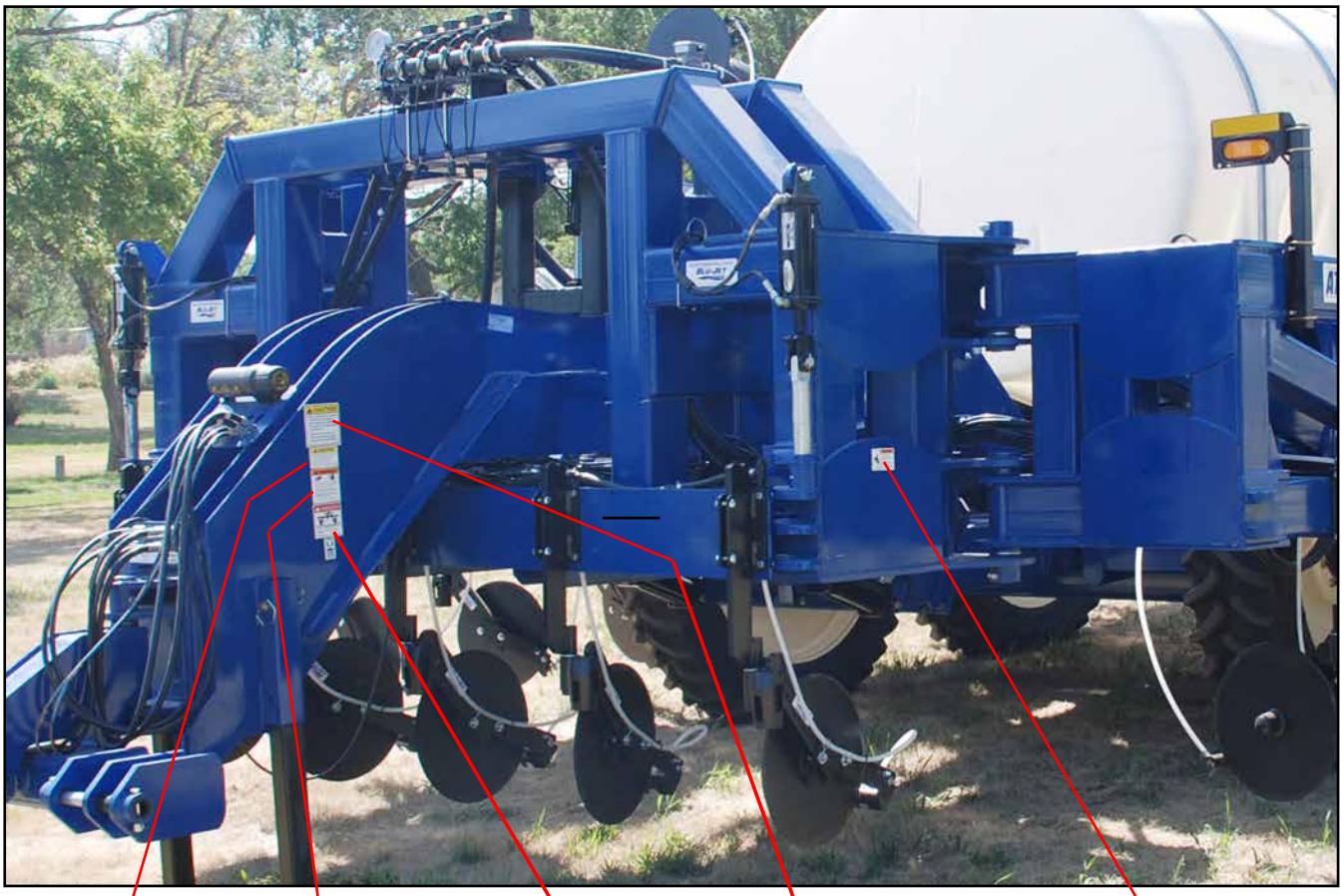

CAUTION

TOWED IMPLEMENT WITHOUT BRAKES

To Avoid Injury Or Machine Damage:

- 20 mph maximum transport speed
- Transport only with empty tank
- 22,000 lb minimum tractor weight for transport

AP 2552

AP2552

WARNING

HIGH-PRESSURE FLUID HAZARD

To prevent serious injury or death:

- Relieve pressure on system before repairing or adjusting or disconnecting.
- Wear proper hand and eye protection when searching for leaks. Use wood or cardboard instead of hands.
- Keep all components in good repair.

AP2914

DANGER

FALLING FROM EQUIPMENT

To prevent serious injury or death:

- Do not ride or climb on machine when operating.
- Keep others away.

AP2483

CAUTION

HYDRAULICS IN FLOAT

To Avoid Machine Damage:

Raise and Third Wing (Fold One) hydraulic circuits shall be in float position while operating in the field to allow wings to flex up and down. Failure to operate with tractor valve in float position may result in damage to toolbar components or hydraulics.

AP 2553

AP2553

WARNING

FRAME PINCH POINT HAZARD

KEEP AWAY

To prevent serious injury or death from crushing:

- Stay away from frame area.
- Keep others away.
- Do not operate machine when bystanders are present.

AP 2969

AP2969

Observe Safety Signs

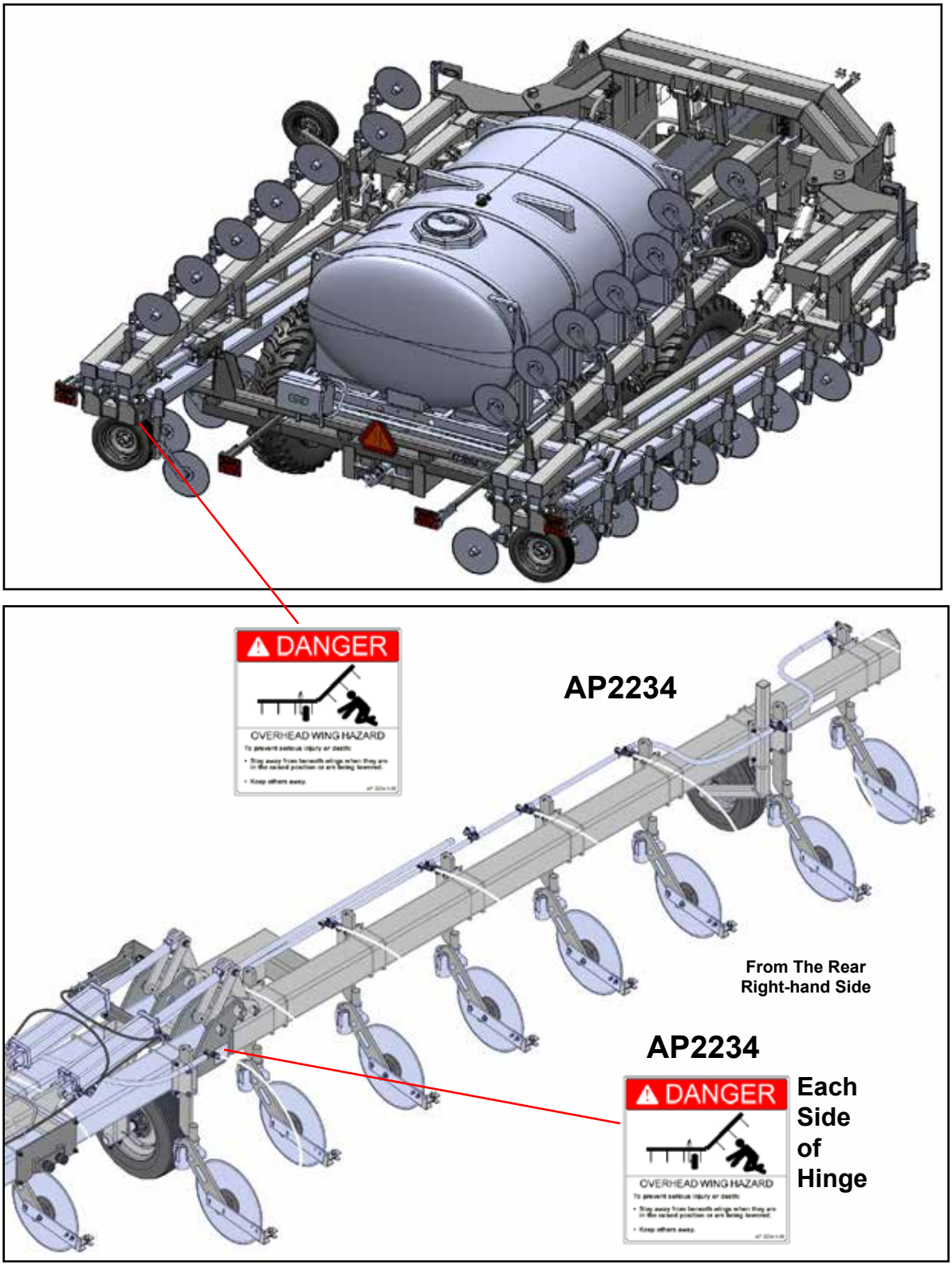

Tractor to tool bar connection

WARNING
Keep bystanders away during hook-up

1. **A tractor with Category IV hitch (Quick Hitch or lower links of three-point hitch) is recommended. Adapter bushings and pins are supplied for Category III as a convenience for moving the applicator. Field use with Category III hitch will be limited by the power required by field conditions. Refer to your tractor operators manual for three point hitch adjustment and three point hitch operating instructions.**

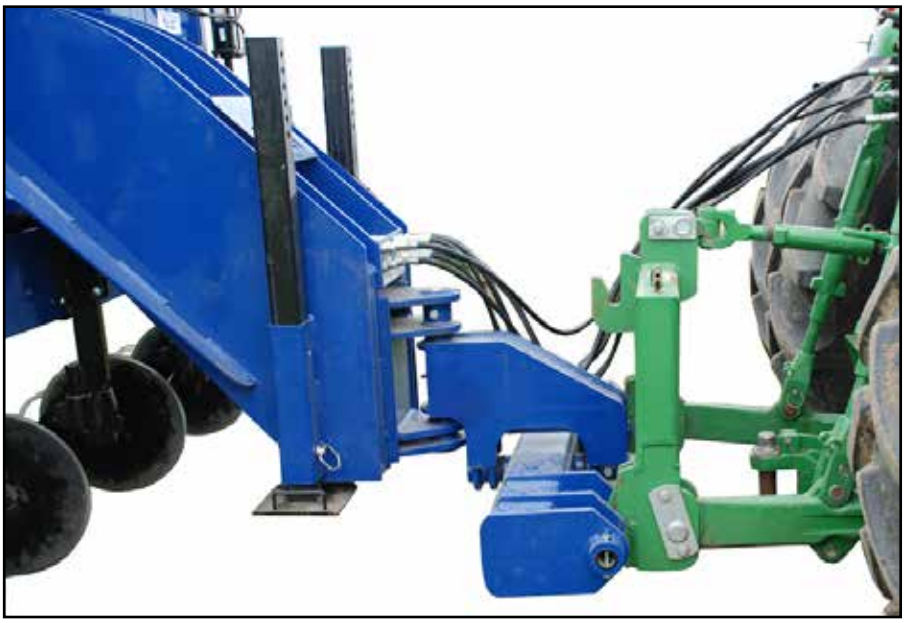

2. **Always use lower link pins of the correct diameter. Make sure that the lower link pins locked in place with the supplied bolts and lock nuts.**

CAUTION

TOWED IMPLEMENT WITHOUT BRAKES

To Avoid Injury Or Machine Damage:

- **20 mph maximum transport speed**
- **Transport only with empty tank**
- **22,000 lb minimum tractor weight for transport**

AP 2552

WARNING Do not move articulated tractor steering wheel until everyone is clear of the equipment. Moving the steering wheel can swing or move attached equipment which could cause serious personal injury.

Operating Instruction

AT7000	Task	Procedures	Illustrations
▶	**Remote hydraulics**	**3. Connect the tool bar hydraulic hoses to the tractor remote couplers.** ▶ **Raise and Lower: 1/2" hoses** ▶ **Fold One: 1/4" hoses folds third wings** ▶ **Fold Two: 3/8" hoses rear fold of wing assemblies** ▶ **AUX: 5/8" hoses operate pump** AUX FOLD TWO / FOLD ONE Raise Lower	
▶	***NOTE:*** **Connect the hoses so the toolbar raises when the tractor remote control lever is moved rearward and lowers when the lever is moved forward.**	**WARNING** Hydraulic fluid escaping under pressure can have enough force to penetrate the skin. Hydraulic fluid may also infect a minor cut or opening in the skin. If injured by escaping fluid, see doctor at once. Serious infection or reaction can result if medical treatment is not given immediately. Make sure all connections are tight and that hoses and lines are in good condition before applying pressure to the system. Relieve all pressure before disconnecting the lines or performing other work on the hydraulic systems.	
▶	**Jack stand**	**4. Raise tool bar and remove jack pin on each side of tongue.**	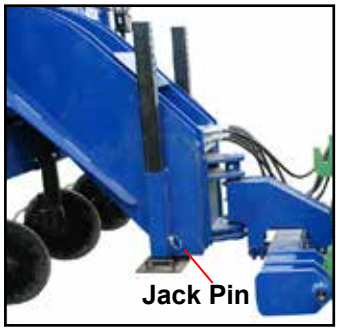
	WARNING **Keep bystanders away**		
		5. Raise jack stands into the transport position and secure with jack pin.	
▶	**Attaching electrical harness**	**6. Attach 7 pin electrical harness before road transport.**	
		7. Check lights for proper operation.	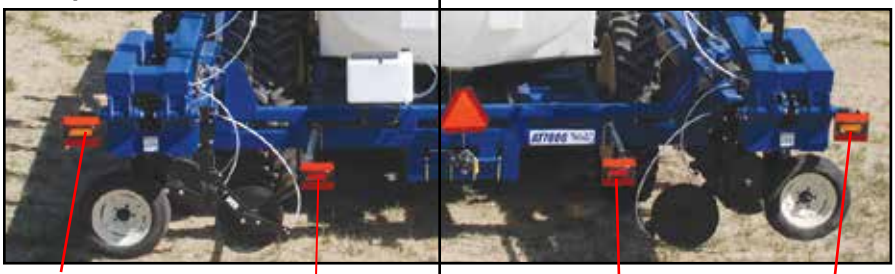

Operating Instruction

AT7000	Task	Procedures	Illustrations

Folding

WARNING

Keep bystanders away

Step one:
Raise tool bar to maximum height.

Step two unlocks wings

Step two:
Fold third wing over until it rests on the wing stops.

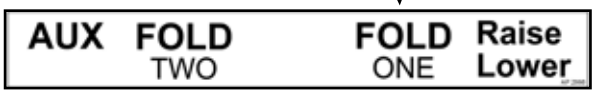

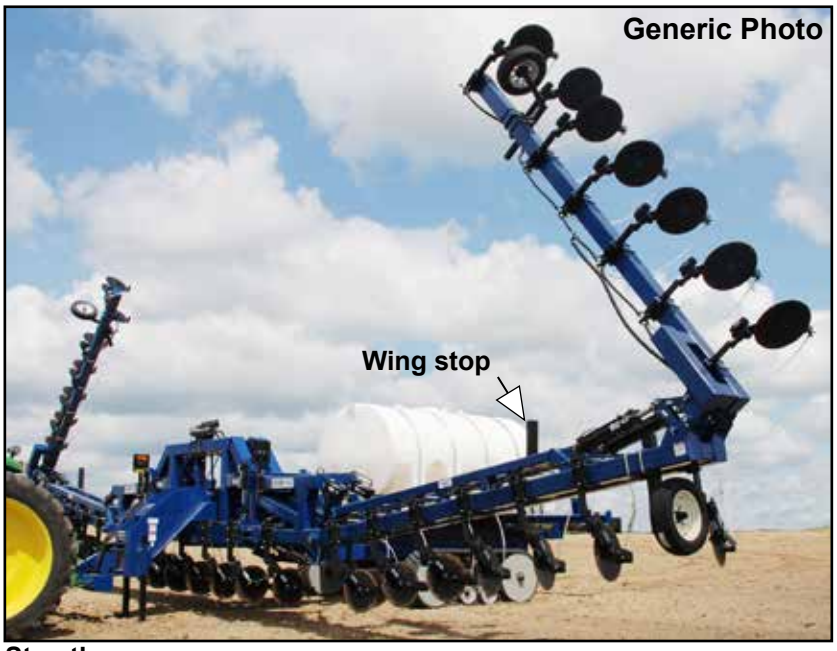

Step three:
Fold wings to the rear until they contact the rear wing rest.

Operating Instruction

AT7000	Task	Procedures	Illustrations

Folding

WARNING
Keep bystanders away

Step four:
Lower wings down on wing rest. This also lowers transport lock.

AUX	FOLD TWO	FOLD ONE	Raise Lower

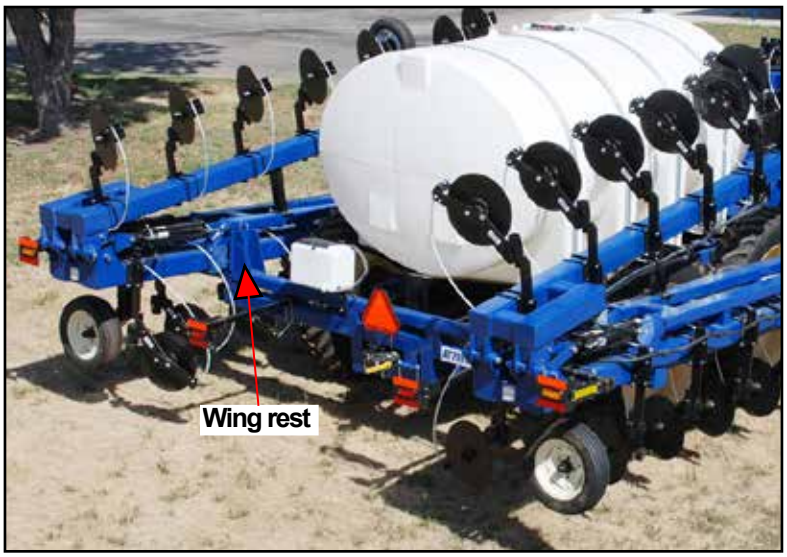

Transport lock: Locked position

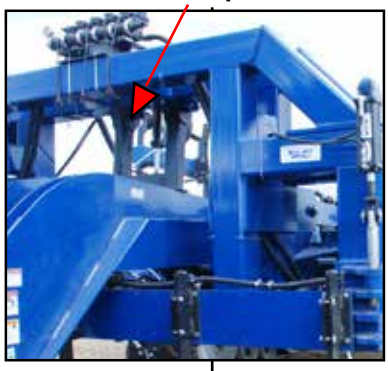

Unfolding

Step one:
Raise wings off rest. The transport lock will also raise up.

AUX	FOLD TWO	FOLD ONE	Raise Lower

Wing lock fully extended

Step: two
Fold wing assemblies forward. Continue holding the lever until the the wing lock cylinders are completely extended.

AUX	FOLD TWO	FOLD ONE	Raise Lower

Step: three
Unfold third wing.

AUX	FOLD TWO	FOLD ONE	Raise Lower

WARNING
Transport with a empty tank

Operating Instruction

AT7000	Task	Procedures	Illustrations
►	**Before going to the field the first time**	**1. Cycle all hydraulics to confirm proper operation and no leaks.**	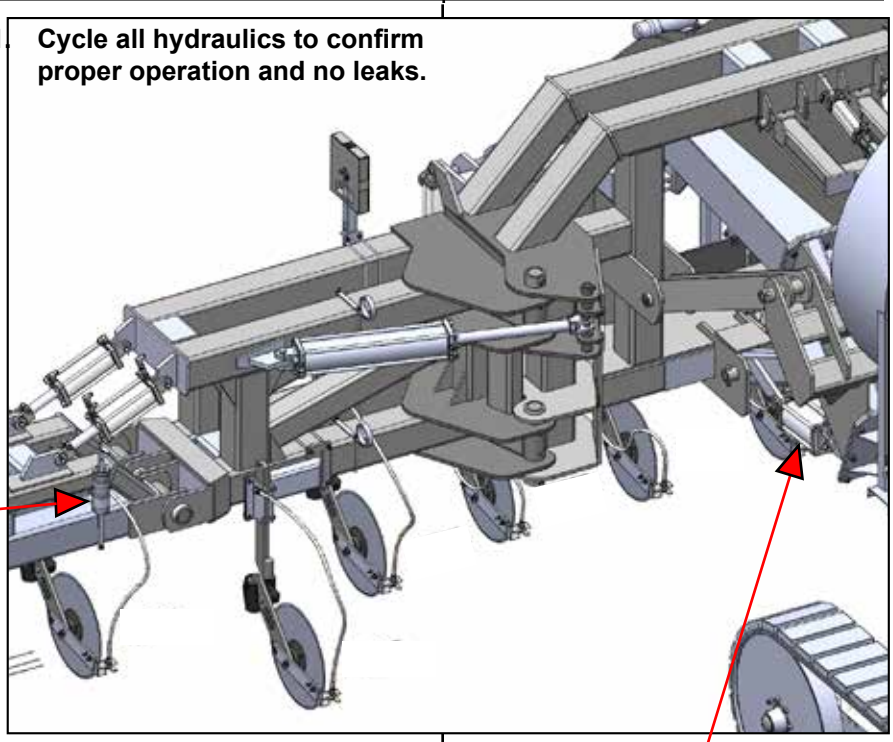
►	**Starting depth collar depth control**		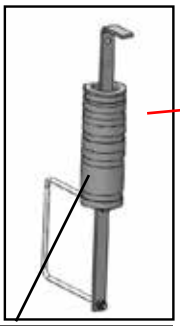 **4-1/4"depth collar**
		2. Use 4-1/4"depth collars as starting depth. Adjust as desired.	
		⚠ CAUTION **HYDRAULICS IN FLOAT** **To Avoid Machine Damage:** **Raise and Third Wing (Fold One) hydraulic circuits shall be in float position while operating in the field to allow wings to flex up and down. Failure to operate with tractor valve in float position may result in damage to toolbar components or hydraulics.** AP 2553	
►	**Coulter assembly adjustment**	**3. Adjust coulter assembly until the blades are running at a depth of 4 to 5 inches.**	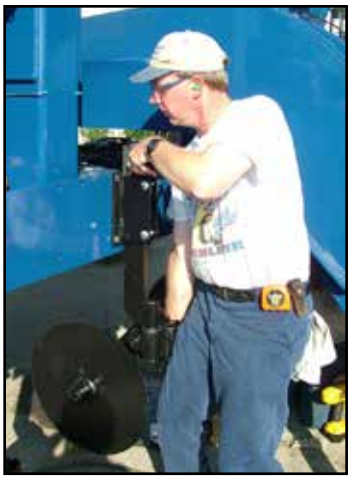
►	**Coulter assembly adjustment**	**4. Loosen carriage bolts and raise or lower coulter assembly.**	

Operating Instruction

AT7000	Task	Procedures	Illustrations
▶	**Coulter assembly adjustment**	**5. Insert 3” spacer between the roll pin and the top of the bracket.**	**6. Tighten the 1/2” hex nuts. This height is a starting point.**

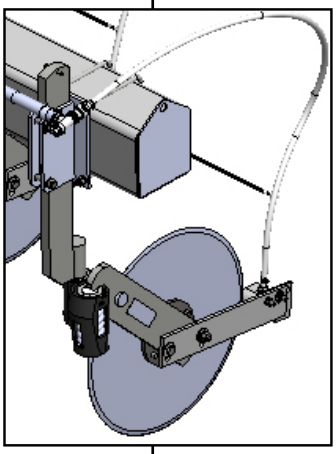

▶ **Vertical adjust gauge wheel starting position**

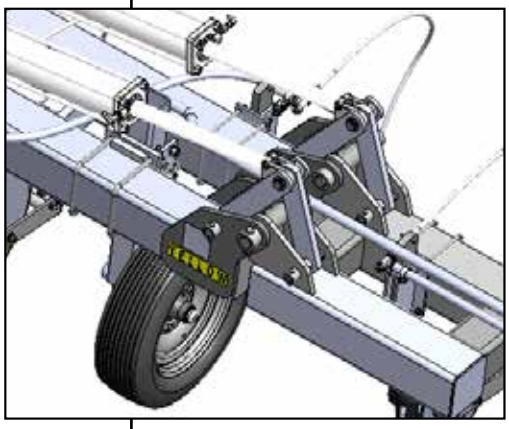

▶ **Gauge wheel starting position**

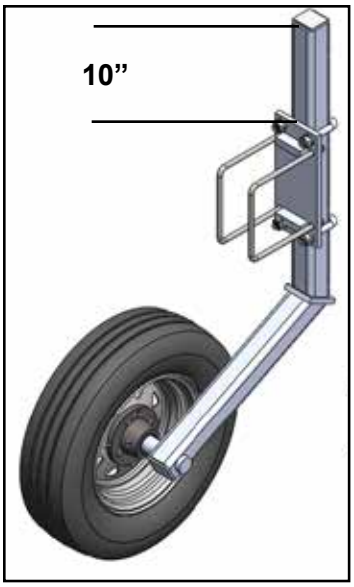

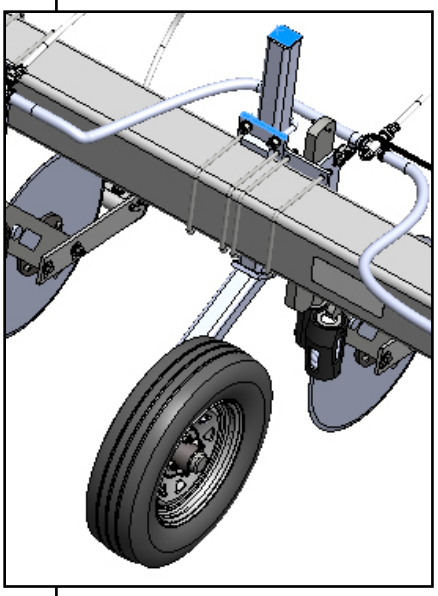

Task	Procedures	Illustrations
▶ **Lubrication: Primary wing** **Center section upper lift arm**		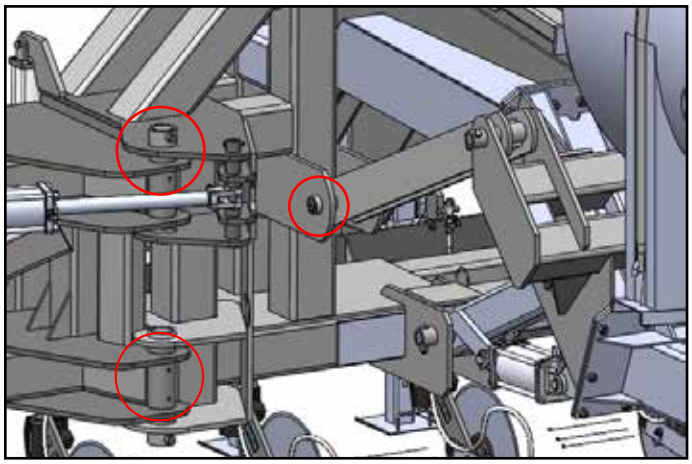
▶ **Lubrication: secondary wing hinge**		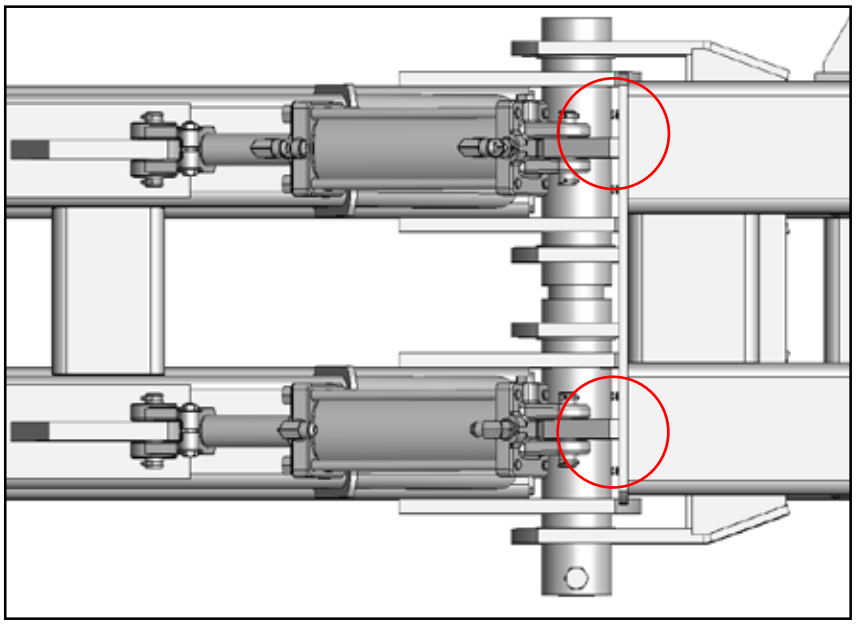
▶ **Lubrication: Secondary wing linkage**		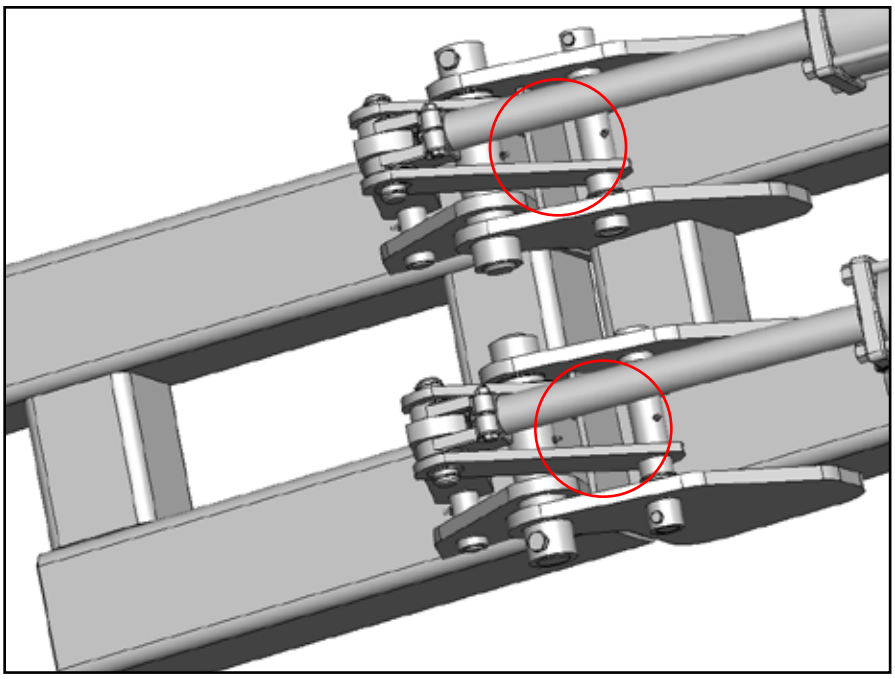

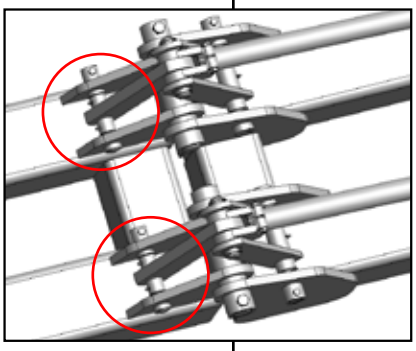

Task	Procedures	Illustrations
▶ **Lubrication: Upper lift arm and transport lock hinges**		
▶ **Lubrication: Pins on lower arms**		
▶ **Lubrication: Wing lock pins.**		

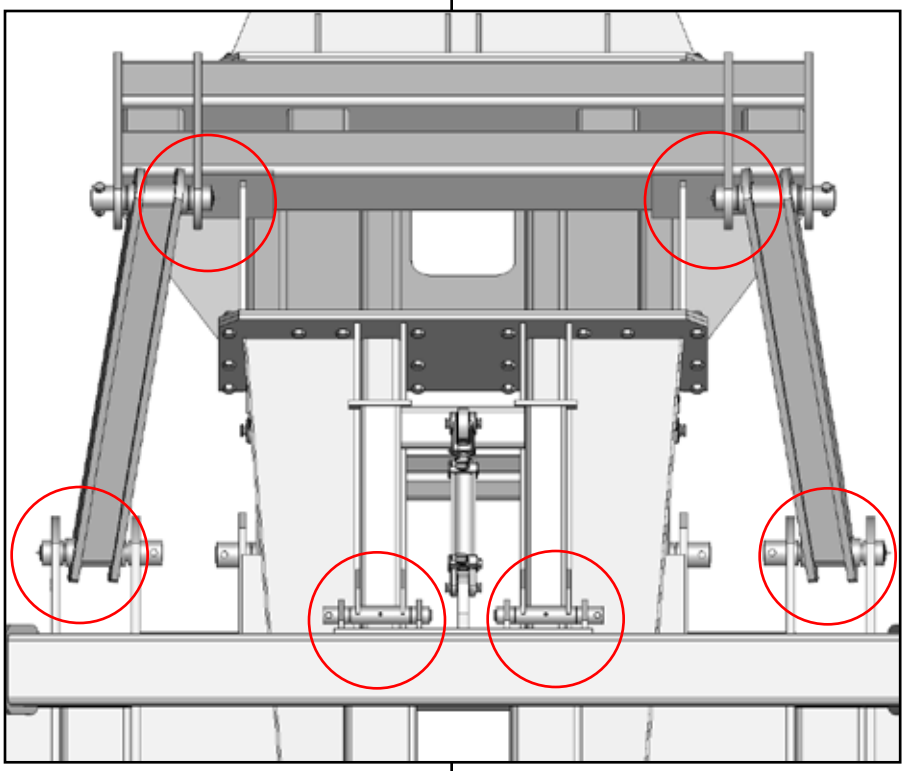

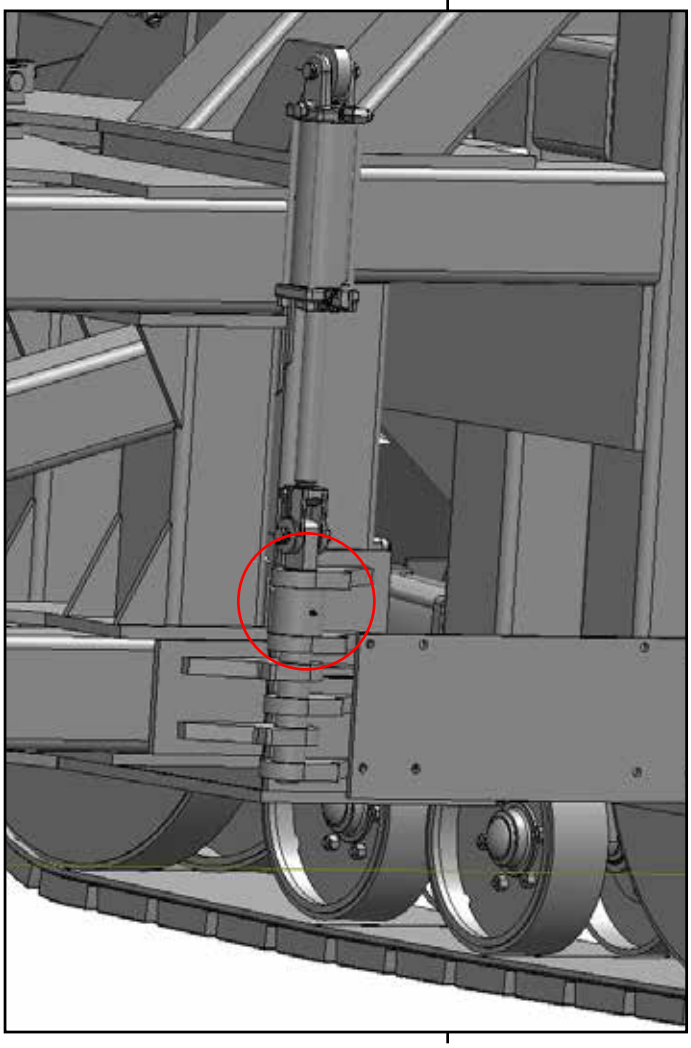

Task	Procedures	Illustrations
► **Lubrication: Coulter**	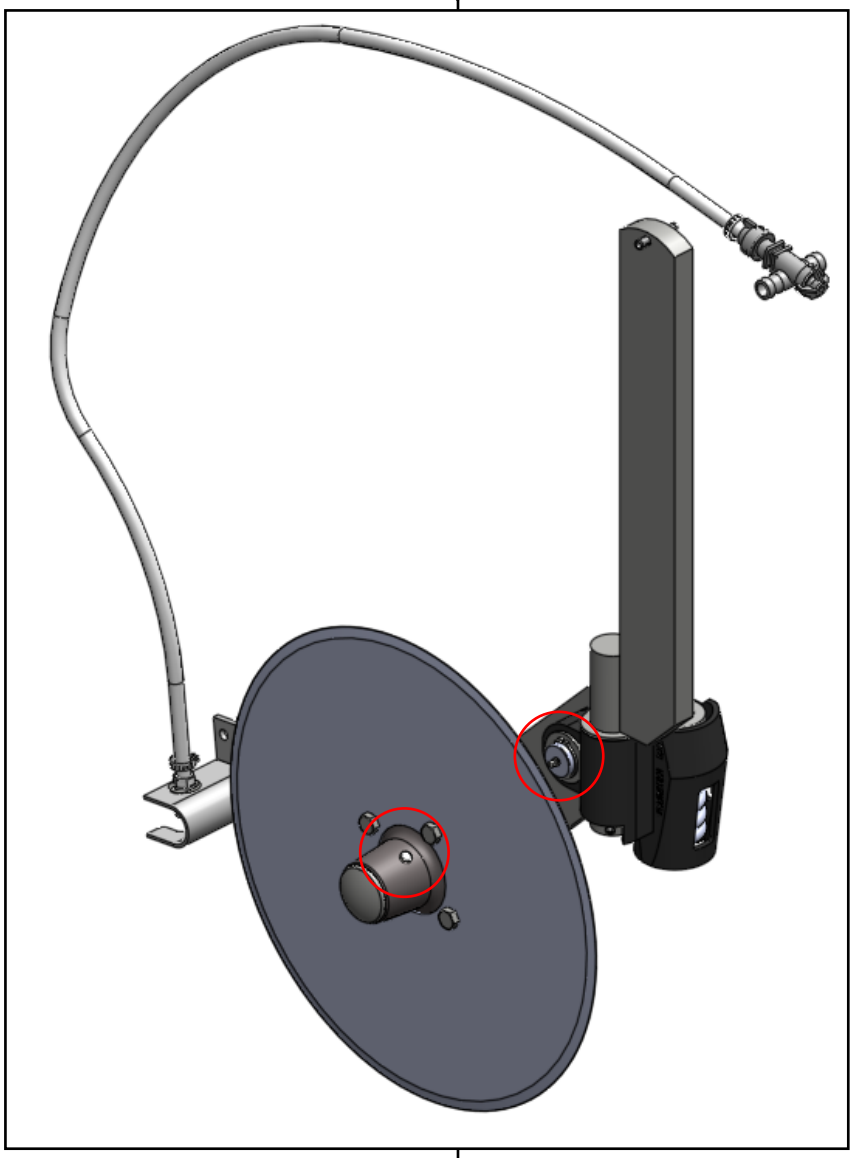	
► **Lubrication: Coulter pivot shaft**	**1. Grease all coulter arm pivots The plug on the coulter hub can be removed. A zerk can be installed. Hub and spindle assembly should be *greased twice seasonally***	

Step 1: Calculate Application Rate

Pounds of solution per acre = Actual pounds of nitrogen per acre desired / Percent of nitrogen in solution

Lbs solution per acre = Actual N / % of N

Examples:
100 lbs of actual N desired / 0.28 (% of N in solution) = 357 lbs of solution per acre
100 lbs of actual N desired / 0.32 (% of N in solution) = 313 lbs of solution per acre

Gallons per acre of solution (GPA) = Pounds of solution per acre / Weight per gallon of solution

GPA = Lbs solution per acre / Weight per gallon

Examples:
357 lbs of 28% N solution / 10.65 lbs per gallon = 33.5 GPA
312 lbs of 32% N solution / 11.0 lbs per gallon = 28.4 GPA

Step 2: Determine Required Pump Capacity

Swath width is the number of rows being applied (Example: A 37 coulter applicator will cover 36 rows with the outside coulters applying for 1/2 row.) times the spacing between the rows.

Swath Width = Rows X Spacing

Example: 36 rows X 30” = 1080” (swath width)

Select desired operating speed (MPH)
Required pump capacity in gallons per minute (GPM) = Application rate X Operating speed X Swath width / Conversion factor

GPM = GPA X MPH X Swath Width / 5940

Example: 33.5 GPA X 7 MPH X 1080” / 5940 = 42.6 GPM at pump

Step 3: Check Rate at Individual Row Nozzle

GPM at nozzle = GPM at pump / # of rows

Example: 42.6 GPM / 36 rows = 1.18 GPM at nozzle

For best performance, keep flow rate per nozzle < 2 GPM. High flow rates result in a larger pressure drop across the diaphragm check valve which may affect the ability of the applicator to achieve the desired rate. Decrease operating speed to reduce the required GPM.

Step 4: Select Nozzle Orifice Plate

An orifice plate at the nozzle is required to maintain a consistent manifold pressure across the applicator, ensuring equal application and producing a high pressure liquid stream for injection. High pressure injection of liquid behind a coulter blade has a recommended manifold pressure range of 60 to 120 psi. It is recommended that the stream stabilizer nozzle inserts always be used with the orifice plates in the nozzles to improve the solid-stream characteristics of the spray pattern for high pressure injection. (Application of liquid with a knife does not require high pressure injection or the use of stream stabilizers.)

An orifice plate for the nozzle is selected which will provide the correct application rate at the desired operating speed and manifold pressure. A row-specific rate chart is supplied based on 28% nitrogen solution in 30” row spacing. Additional charts are available upon request.

From the chart, select an orifice size which has the required application rate (GPA) at the desired operating speed (MPH) and pressure in the range of 80 to 100 psi. A second orifice size is selected for the outside nozzle on applicators with an odd number of coulters. The outside nozzle will be sized either for ½ rate or 1-1/2 rate application, depending on the intended coverage of the applicator.

Example: Using the 30” spacing chart, with 7 MPH as the desired operating speed and 100 lbs N per acre as the target rate (33.5 GPA), the 4916-86 nozzle orifice plate results in the correct application rate between 80 and 100 psi (at approximately 87 psi). The outside nozzle on a 37R30” applicator (covering 36 rows) requires 16.8 GPM (1/2 rate). The orifice selected from the chart for the outside nozzle would be 4916-63.

These stainless steel orifice plates and other sizes between those listed on the chart are readily available from fertilizer supply stores. It is recommended that a fine line strainer (80 mesh) be used on extremely low rate applications to prevent plugging nozzle orifices.

Step 5: Checking Flow Rates

If the injection system is to be checked with water, the flow rates need to be converted since the nozzle orifices have been selected based on a liquid with a different density than water. Conversion factor for 28% nitrogen solution is 1.13.

Example: Calculated pump flow for 33.5 GPA at 7 MPH is 42.6 GPM of 28% N solution. Equivalent water flow is 42.6 GPM X 1.13 = 48.1 GPM. Water flow at each nozzle on a 37R30” applicator would be 1.34 GPM.

30 Inch Spacing Rate Chart

Orifice #	PSI	GPM 10.65 lb./gal 28%	Gallons per Acre 30 Inch Spacing							
			5	6	7	8	9	10	11	12
			mph	mph	mph	mph	mph	mph	mph	mph
4916 49	60	0.320	12.7	10.5	9.0	7.9	7.0	6.3	5.8	5.3
	80	0.369	14.6	12.2	10.4	9.1	8.1	7.3	6.6	6.1
	100	0.413	16.3	13.6	11.7	10.2	9.1	8.2	7.4	6.8
	120	0.452	17.9	14.9	12.8	11.2	9.9	8.9	8.1	7.5
4916 57	60	0.432	17.1	14.3	12.2	10.7	9.5	8.6	7.8	7.1
	80	0.499	19.8	16.5	14.1	12.4	11.0	9.9	9.0	8.2
	100	0.558	22.1	18.4	15.8	13.8	12.3	11.1	10.0	9.2
	120	0.612	24.2	20.2	17.3	15.1	13.5	12.1	11.0	10.1
*4916 63	60	0.528	20.9	17.4	14.9	13.1	11.6	10.5	9.5	8.7
	80	0.610	24.2	20.1	17.3	15.1	13.4	12.1	11.0	10.1
	100	0.682	27.0	22.5	19.3	16.9	15.0	13.5	12.3	11.3
	120	0.747	29.6	24.7	21.1	18.5	16.4	14.8	13.4	12.3
*4916 70	60	0.652	25.8	21.5	18.4	16.1	14.3	12.9	11.7	10.8
	80	0.753	29.8	24.9	21.3	18.6	16.6	14.9	13.6	12.4
	100	0.842	33.3	27.8	23.8	20.8	18.5	16.7	15.2	13.9
	120	0.922	36.5	30.4	26.1	22.8	20.3	18.3	16.6	15.2
*4916 78	60	0.810	32.1	26.7	22.9	20.0	17.8	16.0	14.6	13.4
	80	0.935	37.0	30.9	26.4	23.1	20.6	18.5	16.8	15.4
	100	1.045	41.4	34.5	29.6	25.9	23.0	20.7	18.8	17.2
	120	1.145	45.3	37.8	32.4	28.3	25.2	22.7	20.6	18.9
*4916 86	60	0.984	39.0	32.5	27.8	24.4	21.7	19.5	17.7	16.2
	80	1.137	45.0	37.5	32.2	28.1	25.0	22.5	20.5	18.8
	100	1.271	50.3	41.9	35.9	31.5	28.0	25.2	22.9	21.0
	120	1.392	55.1	45.9	39.4	34.5	30.6	27.6	25.1	23.0
*4916 95	60	1.201	47.6	39.6	34.0	29.7	26.4	23.8	21.6	19.8
	80	1.387	54.9	45.8	39.2	34.3	30.5	27.5	25.0	22.9
	100	1.551	61.4	51.2	43.9	38.4	34.1	30.7	27.9	25.6
	120	1.699	67.3	56.1	48.1	42.0	37.4	33.6	30.6	28.0
4916 107	60	1.524	60.3	50.3	43.1	37.7	33.5	30.2	27.4	25.1
	80	1.760	69.7	58.1	49.8	43.5	38.7	34.8	31.7	29.0
	100	1.967	77.9	64.9	55.6	48.7	43.3	39.0	35.4	32.5
	120	2.155	85.3	71.1	61.0	53.3	47.4	42.7	38.8	35.6
4916 120	60	1.917	75.9	63.2	54.2	47.4	42.2	37.9	34.5	31.6
	80	2.213	87.6	73.0	62.6	54.8	48.7	43.8	39.8	36.5
	100	2.474	98.0	81.7	70.0	61.2	54.4	49.0	44.5	40.8
	120	2.710	107.3	89.4	76.7	67.1	59.6	53.7	48.8	44.7

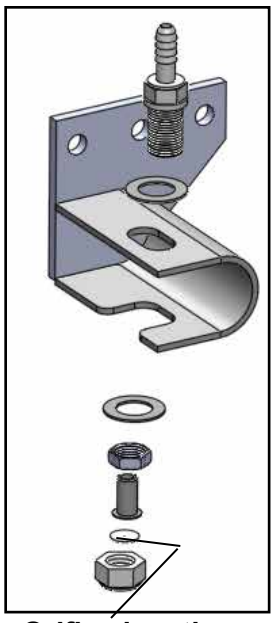

Orifice location

Centrifugal pump and plumbing package includes a centrifugal pump, hydraulic motor, flow meter, control valve, shutoff valves, and fittings for a bypass throttling system.
Controller is not included with this package. Initial set-up and calibration of system should be performed as directed per the controller operating manual. The pump operating manual is attached for additional information.

A manual throttling valve is installed at pump outlet for additional flow adjustment. Valve should be full open to start calibrations.

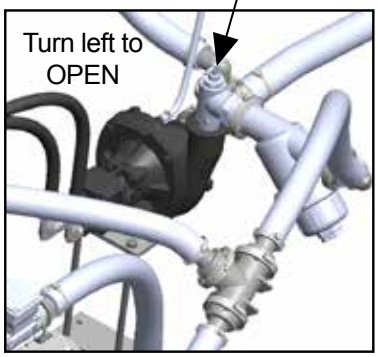

Installation, Operation, Repair and Parts Manual

Description

Hypro centrifugal pumps are designed for agricultural and industrial spraying and transfer of a variety of fluids: water, insecticides, herbicides, wettable powders, emulsives, liquid fertilizers, etc. Polypropylene centrifugal pumps may also be used to pump acid fertilizer, calcium chloride and other highly corrosive liquids such as sulfuric and phosphoric acids.

Hypro Series 9300 hydraulic motor-driven centrifugal pumps provide smooth performance. They can be conveniently mounted on the tractor or sprayer, becoming part of the vehicle's hydraulic system and freeing the PTO for other uses. The Hypro "close-coupled" design reduces the mounting space required, eliminating long shafts and couplers between the pump and motor.

SERIES 9302C & 9302S
Cast Iron & Stainless Steel Centrifugal Pumps

Max. Flow Rate: .....100 gpm
Max. Pressure: .....120 psi
Ports: .....1-1/4" NPT Inlet
.....1" NPT Outlet
Hydraulic Ports: .....1/2" NPT Inlet
.....1/2" NPT Tank

CP3129
BLU-JET
Number

SERIES 9303C & 9303S
Cast Iron & Stainless Steel Centrifugal Pumps

Max. Flow Rate: .....147 gpm
Max. Pressure: .....145 psi
Ports: .....1-1/2" NPT Inlet
.....1-1/4" NPT Outlet
Hydraulic Ports: .....1/2" NPT Inlet
.....1/2" NPT Tank

SERIES 9303P
Polypropylene Centrifugal Pumps

Max. Flow Rate: .....113 gpm
Max. Pressure: .....125 psi
Ports: .....1-1/2" NPT Inlet
.....1-1/4" NPT Outlet
Hydraulic Ports: ....1/2" NPT Inlet
.....1/2" NPT Tank

SERIES 9303C-SP
Cast Iron Centrifugal Pumps

Max. Flow Rate: .....122 gpm
Max. Pressure: .....140 psi
Ports: .....1-1/2" NPT Inlet
.....1-1/4" NPT Outlet
Hydraulic Ports: .....1/2" NPT Inlet
.....1/2" NPT Tank

SERIES 9304C
Cast Iron Centrifugal Pumps

Max. Flow Rate: .....190 gpm
Max. Pressure: .....130 psi
Ports: .....2" NPT Inlet
.....1-1/2" NPT Outlet
Hydraulic Ports: ....1/2" NPT Inlet
.....1/2" NPT Tank

SERIES 9305C-HM3C
Cast Iron Centrifugal Pumps

Max. Flow Rate: .....190 gpm
Max. Pressure: .....180 psi
Ports: .....2" NPT Inlet
.....1-1/2" NPT Outlet
Hydraulic Ports: .....1/2" NPT Inlet
.....1/2" NPT Tank

SERIES 9305C-HM3C-SP, BSP
Cast Iron Centrifugal Pumps

Max. Flow Rate: .....178 gpm
Max. Pressure: .....154 psi
Ports: .....2" NPT or BSP Inlet
.....2" NPT or BSP Outlet
Hydraulic Ports: .....1/2" NPT Inlet
.....1/2" NPT Tank

SERIES 9306C & 9306S
Cast Iron & Stainless Steel Centrifugal Pumps

Max. Flow Rate: .....214 gpm
Max. Pressure: .....150 psi
Ports: .....2" NPT Inlet
.....1-1/2" NPT Outlet
Hydraulic Ports: ....1/2" NPT Inlet
.....1/2" NPT Tank

General Safety Information

NOTE

Notes are used to notify of installation, operation, or maintenance information that is important but not safety related.

⚠CAUTION

Caution is used to indicate the presence of a hazard, which will or may cause minor injury or property damage if the notice is ignored.

⚠WARNING

Warning denotes that a potential hazard exists and indicates procedures that must be followed exactly to either eliminate or reduce the hazard, and to avoid serious personal injury, or prevent future safety problems with the product.

⚠DANGER

Danger is used to indicate the presence of a hazard that will result in severe personal injury, death, or property damage if the notice is ignored.

⚠DANGER

Do not pump flammable or explosive fluids such as gasoline, fuel oil, kerosene, etc. Do not use in explosive atmospheres. The pump should be used only with liquids compatible with the pump component materials. Failure to follow this notice may result in severe personal injury and/or property damage and will void the product warranty.

⚠CAUTION

1. Do not pump at pressures higher than the maximum recommended pressure.
2. Maximum liquid temperature is 140° F for Series 9300 centrifugal pumps.
3. Disconnect power before servicing.
4. Release all pressure within the system before servicing any component.
5. Drain all liquids from the system before servicing any component. Flush with water.
6. Secure the outlet lines before starting the pump. An unsecured line may whip, causing personal injury and/or property damage.
7. Check hose for weak or worn condition before each use. Make certain that all connections are tightly secured.
8. Periodically inspect the pump and the system components. Perform routine maintenance as required (See Repair Instructions).
9. Use only pipe, hose and fittings rated for the maximum psi rating of the pump.
10. Do not use these pumps for pumping water or other liquids for human or animal consumption.

Hazardous Substance Alert

⚠CAUTION

1. Always drain and flush pump before servicing or disassembling for any reason.
2. Always drain and flush pumps prior to returning unit for repair.
3. Never store pumps containing hazardous chemicals.
4. Before returning pump for service/repair, drain out all liquids and flush unit with neutralizing liquid. Then, drain the pump. Attach tag or include written notice certifying that this has been done. It is illegal to ship or transport any hazardous chemicals without United States Environmental Protection Agency Licensing.

⚠DANGER

Never use your hand to check the condition of hydraulic lines or hoses. If hydraulic fluid penetrates the skin, get medical help immediately. Failure to get proper medical help may result in loss of limb or life. The safest way to check hydraulic lines or hoses is by holding a piece of cardboard next to the hydraulic line or hose.

⚠WARNING

The sound pressure level of the pump is 80dBA. Observe all safety precautions when operating the pump within close proximity for extended periods of time by wearing hearing protectors. Extended exposure to elevated sound levels will result in permanent loss of hearing acuteness, tinnitus, tiredness, stress, and other effects such as loss of balance and awareness.

Hydraulic Pumps

Hydraulic pumps come in two basic types:

- **Constant displacement -** which will continue to put out its rated flow regardless of pressure, until the relief valve bypasses the flow.
- **Variable displacement -** which will produce only the flow needed by the implement until the total pump output is reached. If less than the full pump output is required, an automatic stroke control mechanism decreases the pump output to maintain a constant pressure and flow. The output varies according to demand.

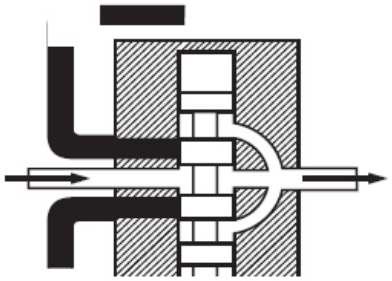

Figure 1

Spool Valves

There are two basic types of spool valves used in conjunction with these pumps — Open and Closed Center. In the Open Center Valve (See Figure 1), the flow goes straight through the valve when in the neutral position. This type is used for constant displacement pumps where the flow should never be shut off.

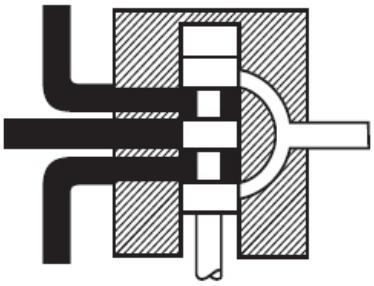

Figure 2

The Closed Center Valve (See Figure 2) is used with variable displacement pumps. The flow is completely shut off in the neutral position, causing the pump stroke to adjust to zero flow. The flow stops, but the pump maintains a static pressure up to the valve.

Hydraulic Motors

Figure 3 shows an internal gear motor (Gerotor) where pressure causes the cavities between the gears to expand on one side, developing torque. The Gerotor type of hydraulic motor is used on Hypro pumps for its superior performance characteristics, including cooler running and higher rpm capabilities.

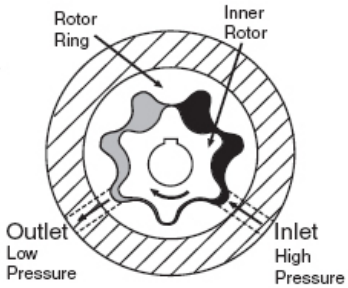

Figure 3

Three Systems

Fitting these components together and installing a motor, we have one of the three types of systems: Open Center, Closed Center (pressure compensated) and Closed Center Load Sensing (flow and pressure compensated).

Open Center Systems

In an Open Center System, the hydraulic pump puts out a constant flow. If the pump puts out more oil than the motor can use, a portion of the oil must be bypassed around the motor. When the oil is bypassed around a loop and does no work, the energy put into it by the pump turns into heat. Therefore, the amount of oil bypassed should be kept to a minimum. Use the largest motor possible.

Closed Center (Pressure-Compensated) Systems

The Closed Center Pressure-Compensated system has a variable displacement pump which will deliver flow at the necessary rate to maintain a specified pressure. It is desirable to equip implements with a motor of a low flow range that will cause the pump to operate between 1800 and 2100 psi [124 and 145 BAR]. A motor that requires a large volume to obtain the correct implement speed usually causes the hydraulic pump in a closed center system to operate at a lower pressure than desirable. This low pressure results in unnecessary flow and the generation of heat that lowers the lubricating quality of the oil and may damage transmission parts. Use the smallest motor possible.

Closed Center Load Sensing Systems (Flow and Pressure-Compensating)

The Closed Center Flow-Compensated System is a variation of the pressure-compensated system, designed primarily for more efficient operation and the generation of less heat. It works on the principle of maintaining a constant pressure drop from the pump to the work port of the selector valve. Any variation in demand at the motor will cause a change in flow. The system senses this change in flow due to the change in pressure drop across the valve and causes the pump to compensate by varying the pump flow. No restrictor is used in the pressure line and no oil is bypassed.

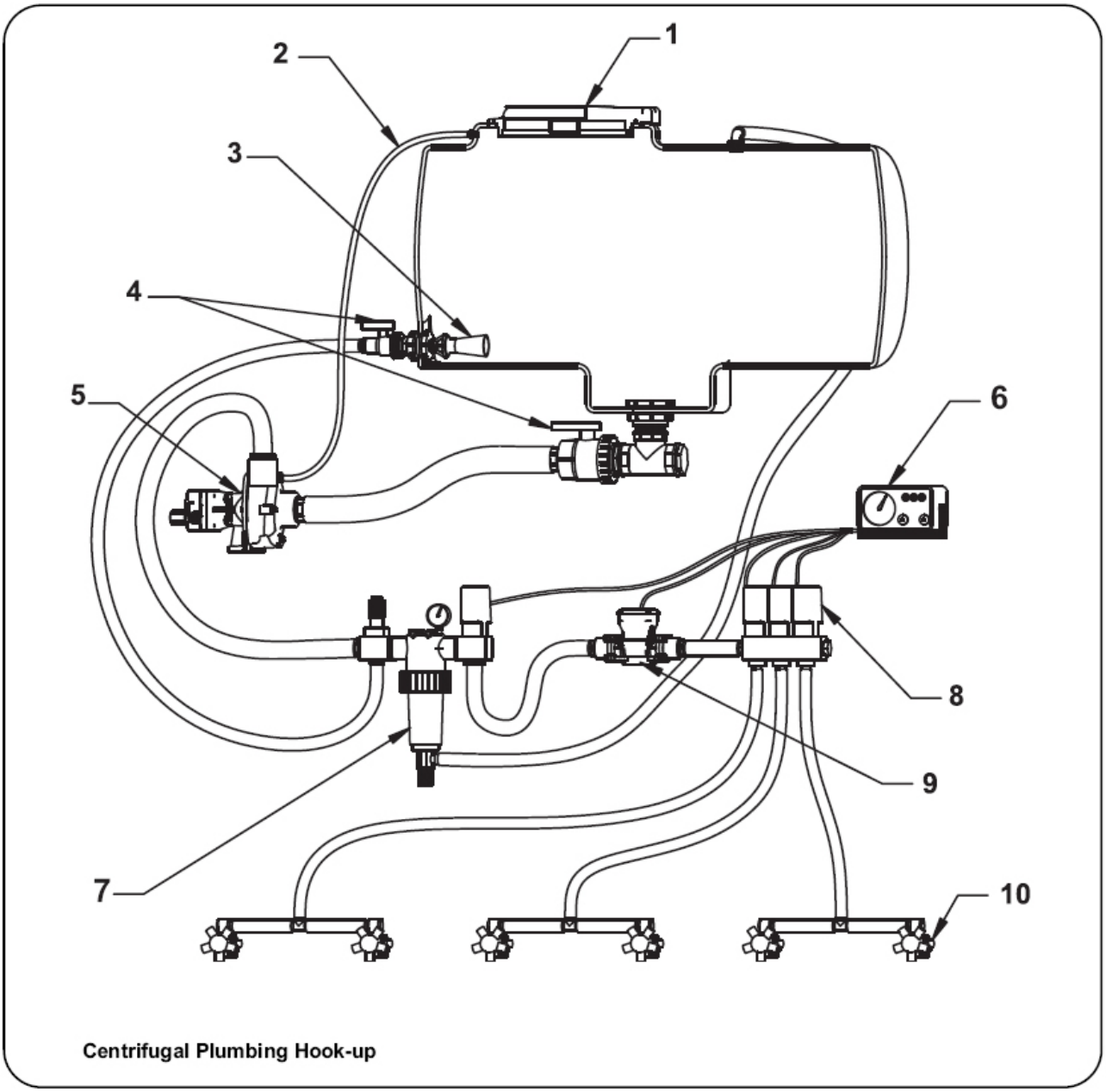

Centrifugal Plumbing Hook-up

REF. NO.	DESCRIPTION
1	Tank Lid
2	Vent Line #3430-0456
3	Jet Agitator
4	Shut-off Ball Valves
5	Centrifugal Pump
6	Spray Control Console
7	Centrifugal Pump Control
8	Manifold Boom Valve
9	Electromagnetic Flowmeter
10	Compact Jet Turret Nozzle Body

All Models — Open Center Systems

Models include Tank Port Adapter with built-in Check Valve Assembly and Pressure Port Adapter.

HM2C and HM4C Models Only — Closed Center and Small Open Center Systems.

Models include Tank Port Adapter with built-in Check Valve Assembly and Pressure Port Adapter with three different size metering orifices for HM4C models. The orifices are not required for use with closed center systems with flow control, such as John Deere closed center systems. Also, do not use for small open center systems with a maximum flow of 8 gpm [30.28 lpm] for HM2C model; 10 gpm [37.85 lpm] for HM4C model. If necessary, the pressure port adapter may be used without a metering orifice installed in any closed center system, provided the pressure differential across the hydraulic motor does not exceed 2200 psi (15.2 Mpa).

NOTE: For applications over 2200 psi hyd: use HM1 or HM5.

Preliminary to Mounting

Consult the owners manual to determine the type and capacity of the hydraulic system. Make sure the hydraulic system is recommended to operate with a continuous load. Refer to the Pump Selection Guide to confirm you have the proper pump for your hydraulic system.

Check to see that the pump impeller can be turned by hand. (Turn the shaft clockwise using a deep socket wrench on the impeller nut.) If it cannot be turned, open the pump casing to look for obstructions. Clean out any corrosion build up where the casing fits over the eye of the impeller.

Pump Inlet Line

To achieve full capacity from the pump, the inlet line should be at least the same size as the inlet port on the pump. Reducing this line size will restrict the capabilities of the pump. The line must also be free of air leaks. Check all fittings and connections in the suction line for tightness. The introduction of air may affect the priming and pumping capabilities of the pump. Use good quality suction hose that will not be collapsed by suction.

For non self-priming models, the centrifugal pump should be mounted below the liquid level and as near to the liquid source as possible to allow for the shortest suction line practical. To achieve optimal performance, the suction line should slope down into the pump. Avoid rises and humps that could trap air in the line to the pump. The suction line and pump should be filled with liquid prior to starting the pump, and all discharge lines should be open.

Pump Outlet Line

The recommended orientation for the outlet port is pointing straight up. This allows liquid to stay in the pump while it is priming. The outlet line should be the same size as the pressure port on the pump to give the optimal flow. The line should have as few restrictions and elbows as possible to optimize the pump performance and reduce pressure drop from the pump to the spray tips.

Priming the Pump

NOTE

The Pump must not be run dry.

Before starting the pump, the inlet line and pump must be filled with liquid and all discharge lines must be open. On self-priming models, only the pump chamber needs to be filled with liquid. The pump must not be run unless it is completely filled with liquid because there is a danger of damaging the mechanical seal, which depends on the liquid for its lubrication.

Non-self-priming models should be mounted below the level of the liquid. The suction line should slope down to the pump and be free of dips and bends. If this cannot be done, a foot valve should be installed in the end of the inlet line so that the line can be completely filled with liquid before starting the pump.

For best priming results, the top vent plug should be removed from the pump casing. A vent line (1/4" [6.35 mm] tubing is sufficient) should be installed running back to the top of the tank. This line prevents air lock and allows the pump to prime itself by bleeding off trapped air. The small stream of liquid that returns to the tank during operation is negligible. The discharge from this line should be positioned in the tank above the high liquid level. Self-priming models can be primed by removing the top vent plug and filling the priming chamber. The priming chamber will fill to the level of the inlet port. After use, the priming chamber should be flushed and drained to avoid chemical corrosion and damage from freezing. Drain by removing the lower drain plug.

Controlling the Pump Flow

The best way to control the flow is by incorporating two control valves in a pipe tee immediately after the strainer in the discharge line. This permits controlling agitation flow independently of nozzle flow.

In any centrifugal pump, it is the large volume of liquid which puts load on the drive. Use only the flow needed to develop the pressure required at the boom and to maintain adequate agitation. Hydraulic motor-driven centrifugal pumps are easily adjusted to the exact flow required, as explained in the Operating Instructions of this manual.

Centrifugal Pump Control

Hypro now offers many different components for spraying systems. The Hypro centrifugal pump control incorporates the electric flow control valve, a self-cleaning line strainer, a visual pressure gauge and a manual agitation control valve.

Flow Control Valve

A high-flow electric proportional valve allows for maximum flow control to the boom valves. It provides smooth, rapid control that can be controlled from either an electronic rate controller or switch box.

Strainers

The recommended placement of the strainer for a centrifugal pump is in the pump outlet line. This will eliminate any possible restriction that the strainer could

create if it were installed in the inlet line. Ensure that the proper strainer size and screen mesh are used to limit the pressure drop and achieve the best filtration. Line strainers can also be installed in the tank fill line to filter liquid as it is loaded into the tank as well as in the boom lines to further filter the solution prior to the spray tips. Tank baskets can also be used to filter material added through the tank lid.

Agitation

The centrifugal pump control contains a manual agitation control valve that can be adjusted to provide the right amount of flow to the jet agitators in the tank to ensure proper mixing within the tank.

Flowmeter

To eliminate the mechanical problems of a turbine flowmeter, we recommend that an electromagnetic flowmeter be used. These flowmeters have no moving parts to wear out and will provide a more consistent and accurate flow reading. They can be input into just about any electronic rate controller or switch box.

Boom Section Valves

For rapid response and reliability, we recommend electric plunger valves be used for boom control. The valves should be sized accordingly to minimize the pressure drop and maximize the flow rate. The boom tubing or hose should be sized accordingly to ensure that a pressure drop in the lines does not occur, causing inconsistent pressures at the nozzles.

Nozzle Bodies

Nozzle bodies with shut-off check valves are recommended to eliminate dripping from the spray tips when the boom valves are shut down.

Hooking Up the Hydraulic Motor to the Tractor Hydraulic System

Hypro Series 9300HMC hydraulic motor-driven pumps can be mounted on either the tractor or sprayer. When hooking up, make sure that no dirt or liquid gets into the hydraulic motor. **Keep all hydraulic connections clean.** Be sure to connect the hydraulic motor into the system correctly by putting the pressure line to the Pressure Port Adapter and return line to the Tank Port Adapter. The port adapters on the hydraulic motor are sized to accommodate 1/2" NPT fittings. For maximum performance, the hydraulic lines should also be at least 1/2" [12.7 mm] in size. For lines longer than 8 feet [2.44 m] or for the HM3C models, hydraulic line size should be at least 3/4" [19.05 mm] in order to reduce heat generation.

The tank (**OUT**) port adapter with a built-in check valve assembly will guard against reverse operation — allowing you to reverse oil flow to operate other equipment. **This adapter must not be removed.** On HM2C and HM4C model pumps, the pressure (**IN**) port adapter is a two-piece assembly consisting of an open (unrestricted) adapter with three orifices packed loose with the pump (See the Operations Section).

When using the HM2C or HM4C unit on any flow-compensated (load sensing) closed center system, or any small open center system with a maximum flow of 8 gpm [30.28 lpm] for HM2C or 10 gpm [37.85 lpm] for HM4C, the metering orifice should be removed from the pressure port adapter. When using these units on flow-compensated systems, connect to the motor priority circuit if your tractor has one.

Standard spool valves, which are found on all tractor hydraulic systems, may cause potentially damaging high peak pressures in the hydraulic system when closed because of abrupt shut-off of oil flow in both the supply and return lines. When shutting off the pump, move the selector to the **FLOAT** position to allow the centrifugal pump to come to a stop gradually.

For further information regarding Hypro products, contact your local dealer or Hypro directly at www.hypropumps.com or by calling 1-800-424-9776.

Operation

Open Center Systems— All Models
Adjusting Centrifugal Pump Output

NOTE

HM1C and HM3C motors have a bypass screw set 1-1/2 turns from fully closed at the factory. HM2C and HM4C have the bypass screw fully closed from the factory.

1. Open the bypass adjustment screw 2-1/2 turns from fully closed. Turn the bypass screw in to achieve the flow for the desired gpm and psi.
2. Start the tractor. Leave the directional valve in the neutral position and allow hydraulic oil to circulate for approximately 10 to 15 minutes or until adequately warmed.
3. Prime the centrifugal pump with all valves open (See the Installation Instructions and System Configuration Diagram).
4. Close the agitation line valve and keep the control valve and the boom shut-off valve open. Note the spray pressure.
5. Open the agitation line valve until you have desired circulation in the tank. Recheck the spray pressure. If it is too low, close down the agitation line valve until the desired spray pressure is reached. If the spray pressure is too high, throttle the centrifugal pump by closing down the control valve.

Closed Center (Pressure-Compensated) — HM2C and HM4C Models Only

On a pressure-compensated system, the amount of oil that is allowed to flow through the hydraulic motor is regulated by a metering orifice in the pressure port adapter. Three different sizes of orifices are supplied with the HM2C and HM4C model pumps to allow flexibility in the flow required for individual sprayer needs.

The smaller the orifice, the less hydraulic oil goes through the motor, so the pump will run slower and the flow of liquid pumped and the spray pressure will also be less. As the hydraulic oil flow is increased (by installing a larger orifice), the amount of liquid being pumped and the spray pressure is also increased.

Installing and Removing Metering Orifice

1. Shut off the hydraulic system.
2. Disconnect the line to the pressure port of the hydraulic motor.
3. Remove the adapter from the motor using a 1-1/16" wrench. Make sure the o-ring is on the metering orifice before installing into port adapter.
4. The orifice is removed or installed in the port adapter by tapping either in or out of the adapter.
   A. To remove — tap the orifice out from the small end of the adapter.
   B. To install — tap the orifice in from the large end of the adapter. The orifice is seated when a snap sound is heard.

Adjusting Centrifugal Pump Output

1. Open the bypass adjusting screw in the hydraulic motor three (**3**) turns.
2. Start the tractor and allow the hydraulic oil to circulate for approximately 10 to 15 minutes or until adequately warmed.
3. Close and lock down the bypass adjusting screw in the hydraulic motor.
4. Prime the centrifugal pump with all valves open (See Installation Instructions and System Configuration Diagram).
5. Close the agitation line valve and the control valve; open the boom shut-off valve.
6. With the pump running, open the control valve until the pressure gauge indicates the desired spraying pressure.
7. Open the agitation line valve until sufficient agitation is observed. Then, if spray pressure drops, readjust the control valve to restore to the desired pressure.
8. If a sufficient boom pressure cannot be attained, install the #2 size orifice and repeat Steps **5** through **7**.
9. If a sufficient boom pressure still cannot be attained with the #2 size orifice, install the #3 size orifice and repeat Steps **5** through **7**.
10. If a sufficient boom pressure still cannot be attained with the #3 size orifice, remove the orifice and repeat Steps **5** through **7**.

Closed Center (Load Sensing) — All Models

Many tractors are being introduced with load sensing systems (also referred to as flow and pressure-compensated systems) which simplify system setup and eliminate many of the problems associated with using the wrong size pump motors on a given hydraulic system. Usually, any of Hypro's 9300HMC models may be used on this type of system, provided the hydraulic system produces sufficient oil flow for the hydraulic motor being used (Refer to the Pump Selection Guide).

This system maintains a constant flow of hydraulic oil for a given pressure drop. The flow is adjustable with a flow control valve installed in the hydraulic system (such as the Tortoise/Hare control on John Deere tractors). Because this system has adjustable flow, there is no need to bypass hydraulic oil as in an open center system, or to restrict the flow with orifices as in a closed center pressure-compensated system.

Adjusting Centrifugal Pump Output

1. Make sure the orifice from the pressure port adapter of the hydraulic motor has been removed (HM2C and HM4C models only).
2. Close and lock down the bypass adjusting screw in the hydraulic motor.
3. Set the tractor hydraulic flow control valve for minimum hydraulic oil flow to the remote outlet (Tortoise position).
4. Start the tractor and allow the hydraulic oil to circulate for approximately 10 to 15 minutes or until adequately warmed.
5. Prime the centrifugal pump with all valves open (See the Installation Instructions and System Configuration Diagram).
6. Close the agitation line valve and open the control valve and the boom shut-off valve.
7. Slowly adjust the tractor hydraulic flow control valve until the desired boom pressure is attained.
8. Open the agitation line valve until sufficient agitation is observed. If spray pressure drops, readjust the tractor hydraulic flow control valve to restore it to the desired pressure.

Flush Pump After Use

One of the most common causes for faulty pump performance is gumming or corrosion inside the pump. Flush the pump and entire system with a solution that will chemically neutralize the liquid pumped. Mix this solution according to the manufacturer's directions. This will dissolve most residue remaining in the pump, leaving the inside of the pump clean for the next use.

To Prevent Corrosion

After cleaning the pump as directed above, flush it with a permanent-type automobile antifreeze (Prestone®, Zerex®, etc.) containing a rust inhibitor. Use a 50% solution, half antifreeze and half water. A protective coating will remain on the inner pump surfaces. Save the excess antifreeze for the next application. Plug the ports to keep out air during storage. For short periods of idleness, noncorrosive liquids may be left in the pump, but air must be kept out. Plug the ports or the seal port connections.

Hypro Repair Tools:
Tool Box No. 3010-0168 • 1/4" Allen Wrench No. 3020-0008
Support Bars (2) No. 3010-0064 • Port Brush No. 3010-0066
1/16" Allen Wrench No. 3020-0009 • Brush Holder No. 3010-0067 • Large Retaining Ring Pliers No. 3010-0084 • Small Retaining Ring Pliers No. 3010-0167

Shop Tools Needed
Bench Vice • Arbor Press • Air or Hand Drill • Small Knife
Metal Pipe — 1" dia. x 4" high (Bearing Seating Tool)
PVC Pipe — 3/4" dia. x 4" - 6" high (Seal Seating Tool)
12" Crescent Wrench • Two Flat Screwdrivers (approx. 10" long)
1/2", 9/16", 5/8" and 7/8" sockets • Hammer or Rubber Mallet
Small Screwdriver (recommended) • Large File (optional)
1/2" and 9/16" Box End Wrench • Lubricating Spray (WD-40 or LPS)
Small amount Hydraulic Oil • Cleaning Solvent Tank (recommended)

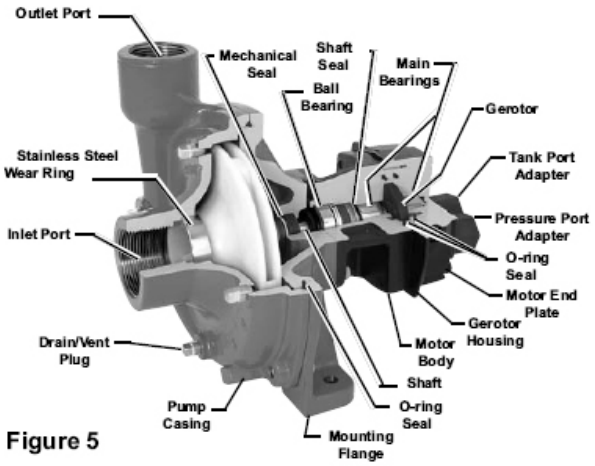

Figure 5

Pump Housing Disassembly

NOTE

Instructions in italics describe procedures for the Series 9300P Polypropylene Centrifugal Pumps, when different than the cast iron pumps.

1. Using a 9/16" box end wrench, remove the four Hex Head Bolts holding the Pump Casing to the Mounting Flange. (If necessary, tap Pump Casing Outlet Port with rubber mallet or hammer to separate.) [*Using a 1/2" wrench, remove the six bolts from the front. For the two bottom bolts securing the base, you will need to hold the two nuts with another 1/2" wrench. Also remove the 5/16" screw from the rear near the outlet port.*]
2. To remove the Impeller Nut, insert a large screwdriver or file (at least 10" [254 mm] long) into Impeller Vanes to prevent Impeller from turning when loosening nut. Use a 5/8" socket wrench to remove the Impeller Nut by turning it counterclockwise (See Figure 6). [*Use 7/8" deep socket wrench to remove Plastic Seal Nut, then 9/16" deep socket to remove Metal Jam Nut and Washer.*]

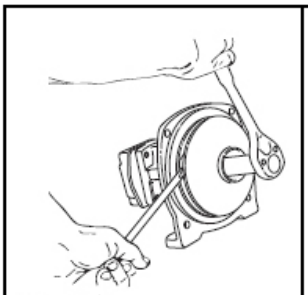
Figure 6

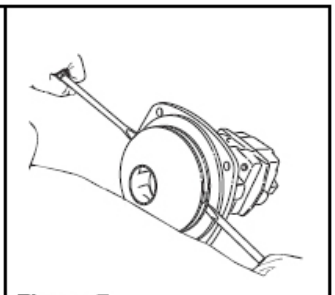
Figure 7

3. Once nut [*and washer*] is removed, place a screwdriver on each side behind the Impeller and pry away from the Mounting Flange (See Figure 7). Remove Woodruff Key from the Shaft. Remove O-ring from the Mounting Flange.

Pump Seal Removal

1. Lightly lubricate the Shaft for easier removal of the Seal. Using two screwdrivers positioned opposite each other, pry the rotary portion of the Seal from the Shaft (See Figure 8).

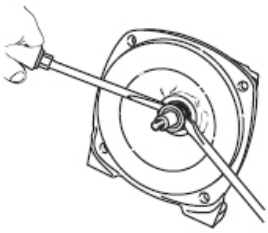
Figure 8

NOTE

In the case of a severe Pump Seal leak, inspect the Shaft/Bearing Assembly in the Hydraulic Motor for possible contamination.

2. Using a 1/2" box end wrench, remove the four bolts holding the Motor to the Mounting Flange. Remove Motor. [*Remove the Plastic Back Cover flange. Knock the Seal out from back with a hammer and screwdriver. Use a 1/2" socket wrench and 1/2" box end wrench to remove the Mounting Flange from the Hydraulic Motor.*]

3. Using a screwdriver and hammer, tap out the stationary portion of the Mechanical Seal from the Motor side of the Mounting Flange. (If the Motor is not removed, the Seal can be pried out with a small screwdriver.)

NOTE

The seal will be damaged by removal in this manner. A new seal must be used when pump is reassembled.

Clean-Up Of Pump Housing

1. Using a circular bottle-type wire brush with air or hand drill, clean the Outlet Port, Inlet Port and the sealing areas of the O-ring on the Pump Casing and Mounting Flange. Using the port brush, clean the seal cavity in the Mounting Flange. [*The last step should not be performed on the 9300P.*]
2. After wire brush cleaning, it is recommended that the Pump Casing and Mounting Flange be further cleaned in a solvent tank to remove rust and corrosion particles.

Seal Replacement/Pump Housing Reassembly

NOTE

If the Hydraulic Motor requires repair, proceed to Disassembly and Repair of the Hydraulic Motor.

1. Lubricate the seal cavity in the Mounting Flange with WD-40®, LPS or equivalent. Do not lubricate the shaft.
2. Install the stationary portion of the Mechanical Seal by sliding over the Shaft with the ceramic side out.

NOTE

Make sure both the seal cavity and seal are clean and lubricated.

3. To seat the Seal in the seal cavity, use a piece of 3/4" PVC pipe 4" to 6" [*101.6 to 152.4 mm*] in length. Lubricate sealing surface on seal after it is seated. Do not lubricate the shaft.
4. To install the rotary portion of the mechanical seal, place it over the shaft with the carbon side facing in, and press against the stationary portion (See Figure 9).

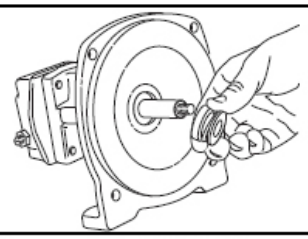

Figure 9

5. Install rubber gasket 1700-0100 over shaft against rotary portion of seal.

NOTE

On Models 9305C-HM3C-SP, 9505C-HM3C-BSP, and 9305C-HM3C, install the Washer on the Shaft prior to installing the Impeller Nut.

⚠CAUTION

The threads of the Plastic Seal Nut are fine and can be easily cross threaded. To prevent cross threading, turn the Plastic Seal Nut counterclockwise until area of thread engagement is detected; then turn the Plastic Seal Nut clockwise until it is secure. Do not over tighten the Plastic Seal Nut.

6. Insert a Woodruff Key into the Shaft key slot; then place the Impeller on the Shaft and align it with the Key and press against the Mechanical Seal Assembly. Apply a blue thread locking compound to the Impeller Nut, and using a 5/8" socket wrench and using a screwdriver to hold the Impeller, install the Impeller Nut. [*On polypropylene models, insert the Woodruff Key into the Shaft key slot. Place the Impeller on the Shaft and align it with the Key; then press against the Mechanical Seal Assembly. Place the Metal Seal Washer on the Shaft. Apply a drop of blue thread locking compound on the Impeller Nut and secure the Impeller to the Shaft as described previously.*]
7. Install the O-ring on the Mounting Flange. Replace the O-ring if worn or damaged.
8. Place the pump casing on the mounting flange, insert and tighten the bolts.

Disassembly and Repair of the Hydraulic Motor

NOTE

The work area and motor should be as clean as possible to prevent contamination of parts.

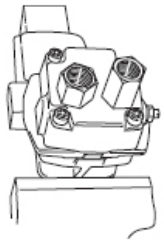

Figure 10

1. Remove the Mounting Flange from the Motor body and place Hydraulic Motor in vise (Figure 10).
2. Remove Tank Port Adapter and Pressure Port Adapter with large crescent wrench or 1-1/16" box end wrench (See Figure 10).
3. Using a 9/16" box end wrench, loosen the Nut on the Bypass Adjusting Screw (See Figure 10).
4. Using a small screwdriver, remove the Bypass Adjusting Screw from the Motor. (This will remove the Screw, Nut, Washer and Thread-Seal Gasket.)
5. Using a 1/4" Allen wrench, remove the Socket Head Cap Screws from the Motor End Plate (See Figure 10).
6. If Motor End Plate will not lift off easily, use a small screwdriver to carefully pry apart the boss portion of the End Plate and Gerotor Housing until free (See Figure 11). If Gerotor Housing will not lift off easily, carefully pry

apart the boss area between the Gerotor Housing and the Motor Body. (It may be necessary to alternate sides when prying apart Motor sections.)

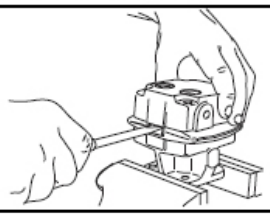

Figure 11

7. Remove both parts of the Gerotor.
8. On HM3C models, remove the Woodruff Key from the Shaft. On HM1C, HM2C and HM4C models, remove the Roll Pin from the Shaft.
9. Remove the O-ring from the Motor End Plate and Body with a flat instrument such as a knife blade.
10. Inspect Motor End Plate, Body and Gerotor Housing for wear and/or gouging. If gouging has occurred in both the Motor End Plate and Body, the Motor is not repairable. If gouging has occurred in the Motor End Plate, Body or Gerotor Housing, the part that is worn must be replaced. If Gerotor Housing is damaged, Gerotor parts must also be replaced.

To Remove the Shaft Assembly from the Motor Body

1. Remove the Slinger Ring from the Motor Shaft.

⚠WARNING

Special attention should be exercised when working with retaining rings. Always wear safety goggles when working with spring or tension loaded fasteners or devices.

2. Using the large retaining ring pliers, remove the Retaining Ring next to the Ball Bearing in the Motor Body.

NOTE

If Bearing is binding against the Retaining Ring so that it cannot easily be removed, place the Motor Body (threaded portion of the shaft up) on arbor press. Using a piece of un-threaded metal pipe (1" dia. x 4" high [254. mm x 101.6 mm high]), slide over the Shaft and gently press down with the arbor press just enough to relieve the pressure on the Retaining Ring.

Figure 12

3. Place Body in position on arbor press. Threaded portion of the Shaft should be inside the fixture. Press out Shaft assembly with arbor press (See Figure 12).

Hydraulic Motor Shaft Disassembly and Repair

1. Remove Large Retaining Ring from Shaft with a screwdriver. Remove Thrust Bearing Assembly from Shaft (includes the Thrust Bearing and two Thrust Bearing Races) and the Seal Spacer.
2. Remove the Small Retaining Ring next to the Shaft Ball Bearing.
3. To remove the Bearing from the Shaft, place the Shaft (threaded end up) in the arbor press fixture. Place the two support bars provided in the repair kit opposite each other and between the Seal on the Shaft and the arbor press fixture. Using an arbor press, press the Shaft through the Bearing, Seal Spacer and Seal (See Figure 13).

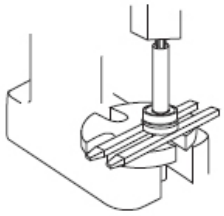

Figure 13

4. Inspect the sealing area of the Shaft for wear. Inspect other Shaft Assembly Components for wear and replace if necessary.
5. While Motor is completely disassembled, clean all parts in a solvent bath.

To Install New Shaft Seal

1. The sealing lips on a new Seal must be expanded to fit on the Shaft. Press seal onto large end of Shaft with seal lip facing out. Do not push Seal past keyway on Shaft.
2. Once seal lip has been expanded, remove the Seal from the Shaft.
3. With the seal lip facing the large end of the Shaft, slide the Seal over the threaded end of Shaft and gently push onto the raised area of the Shaft, stopping approximately 1/4" [6.35 mm] from the Large Retaining Ring groove.
4. Over the large end of the Shaft, install the Seal Spacer, Thrust Bearing Race, Thrust Bearing, second Thrust Bearing Race and the Large Retaining Ring.

To Install Shaft Bearing

1. Over the threaded end of the Shaft, install the Spacer Ring and the Ball Bearing.
2. Insert the Shaft (threaded end down) into the arbor press fixture. Place the two support bars opposite each other and between the Bearing and the fixture. Place on an arbor press and carefully press the Shaft down, allowing just enough room for the Retaining Ring next to the Bearing to be installed.

NOTE

Make sure the Spacer ring between the seal and Bearing is free floating (not binding).

NOTE

Should the Main Needle Bearings in the Hydraulic Motor need replacement, a new Body and/or End Plate with the Main Bearing already installed, must be used. If this occurs, check other internal parts of the Motor for damage and wear.

To Install the Shaft Assembly in the Motor Body

1. Place the Shaft Assembly into the Motor Body bearing bore with threaded end up (See Figure 14).

Figure 14

2. On arbor press, place Body on arbor press fixture.

NOTE

Make sure the surface edge of the fixture is smooth and clean.

NOTE

An un-threaded piece of pipe (1" dia. x 4" [25.4 mm x 101.6 mm] high) is needed to support the outer bearing race on the shaft ball bearing. Place this pipe over the shaft and press shaft assembly down until retaining ring can be installed in its groove in the bearing core of the motor body (Figure 15).

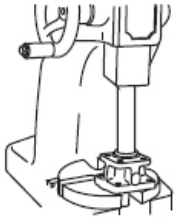

Figure 15

Reassembly of Remaining Hydraulic Motor Parts

1. Place Motor Body in a vise with large end of Shaft facing up.
2. Install the O-ring in the Body.
3. Install the Woodruff Key or Roll Pin on the Shaft. Place the Inner Gear of the Gerotor onto the Shaft making sure Gerotor slot lines up with the key in the shaft.

NOTE

The Woodruff Key can slide up behind the inner gear of the gerotor when the gear is installed. Make sure the key is visible in the slot after the gear is in place.

4. Install the outer portion of the Gerotor, making sure the Gerotor is centered within the O-ring groove on the Body.
5. Install the Gerotor Housing, making sure the pins in the Gerotor Housing line up with their respective holes in the Body.
6. Lightly lubricate the area between the Inner and Outer Gerotor and the Outer Gerotor and Gerotor Housing with hydraulic oil or mineral oil.

⚠WARNING

Special attention should be exercised when working with retaining rings. Always wear safety goggles when working with spring or tension-loaded fasteners or devices.

7. Install O-ring on the motor end plate.
8. Place end plate on gerotor housing, making sure holes in end plate line up with pins in the gerotor housing.
9. Install four Socket Head Cap Screws in Motor End Plate, and using a 1/4" Allen wrench, tighten Cap Screws alternately and evenly in a crisscross pattern to approximately 15 foot pounds [20 Nm] of torque.
10. Install the Thread Seal Gasket on the Bypass Adjusting Screw. Put the Gasket on from the slotted end and turn until four threads on the Screw are showing. Install the Washer and the Nut. Install Bypass Adjusting Screw in the Motor end plate.
    A. For closed center hydraulic systems, turn the Bypass Adjusting Screw in until it bottoms out in the End Plate. Tighten nut down with 9/16" box end wrench.
    B. For open center hydraulic systems, turn the Bypass Adjusting Screw in until it bottoms out in the End Plate; then turn back out 1½ full turns. Holding the Bypass Adjusting Screw with a screwdriver, tighten Nut. (Motor will then have to be readjusted to tractor system.)
11. Replace O-ring on both port adapters.
12. Install Pressure Port Adapter and Tank Port Adapter back onto the Motor. (For ease of installation, tighten the Pressure Port Adapter first, then the Tank Port Adapter.)
13. Remove Hydraulic Motor from the vise. Turn Shaft by hand to check for binding.
14. Install Slinger Ring over Motor Shaft.
15. Install Motor into Pump Mounting Flange. Insert four Hex Head Bolts; then alternately and evenly tighten them. [*For polypropylene models, secure the Hydraulic Motor to the Mounting Flange with four Hex Head Cap Screws and Nuts. The Nuts should be visible when the assembly is complete*.]

Troubleshooting

If the proper Hydraulic Pump Unit has been selected according to Hypro recommendations, and the unit has been correctly plumbed into the hydraulic system, operation should be quite satisfactory. If spraying performance is unsatisfactory or hydraulic system heat is excessive etc., check the following troubleshooting guide for possible problems and solutions.

Troubleshooting Guide

Symptom	Probable Cause(s)		Corrective Action(s)
Low Discharge	Pump not primed.	—	Remove topmost vent plug from face of pump and run pump to expel trapped air (See Installation Instructions).
	Air leaks in inlet line.	—	Check and reseal inlet fittings.
	Blocked or clogged line strainer.	—	Inspect strainer and clear any debris from screen.
	Impeller plugged.	—	Inspect and clear obstruction.
	Undersize inlet line or collapsed hose.	—	Suction line should be the same diameter as inlet port of pump or larger.
	Improperly sized hydraulic motor.	—	Refer to Pump Selection Guide to determine proper size hydraulic motor for your hydraulic system.
	Bypass Adjustment Screw not set properly.	—	Adjust bypass screw on side of hydraulic motor in until the desired output is attained.
	Eye of impeller rubbing on volute.	—	Remove volute (front cover) and inspect the impeller. If wear detected, sand the impeller eye O.D. with emery cloth.
Hydraulic system overheating	Improper hydraulic motor size.	—	Refer to Pump Selection Guide to determine proper size for your hydraulic system.
	Bypass Adjustment Screw set to bypass too much oil.	—	Close adjustment screw on side of hydraulic motor to lessen the amount of oil being bypassed.
	Improper metering orifice installed in pressure port.	—	Install proper size orifice. Refer to Installation section for proper sizing.
	Insufficient hydraulic hose size.	—	Check hydraulic hose size. Hose should be at least 1/2" [12.7 mm]. For large open-center systems, 3/4" [19.05 mm].

Performance Graphs

GRAPHS FOR HYDRAULICALLY-DRIVEN CENTRIFUGALS

9302

9302C-HM1C & 9302S-HM1C

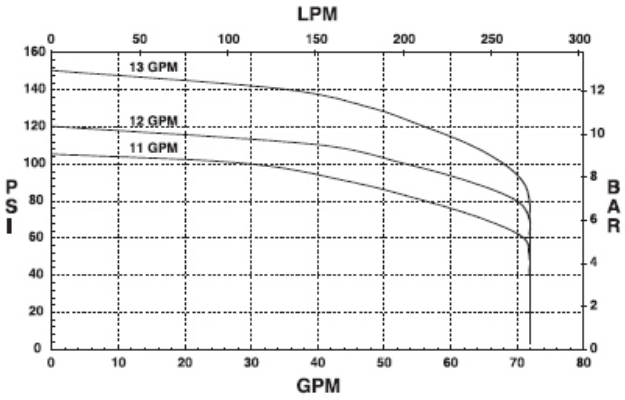

9302C-HM2C & 9302S-HM2C

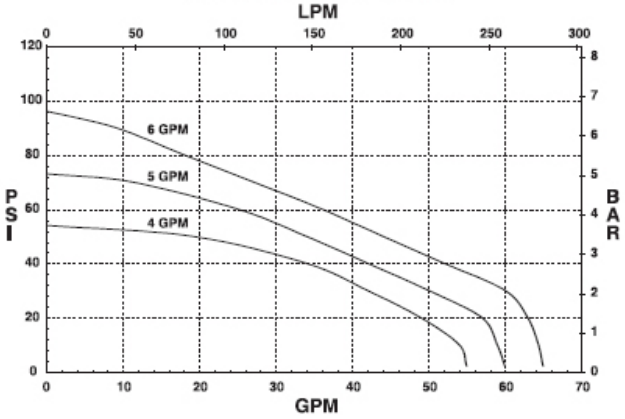

9302C-HM4C & 9302S-HM4C

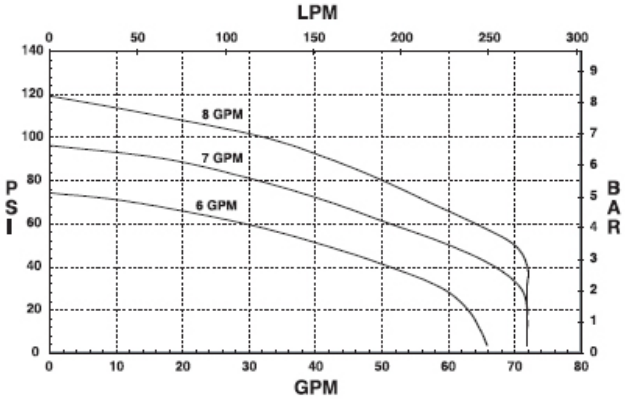

9303

9303C-HM1C & 9303S-HM1C

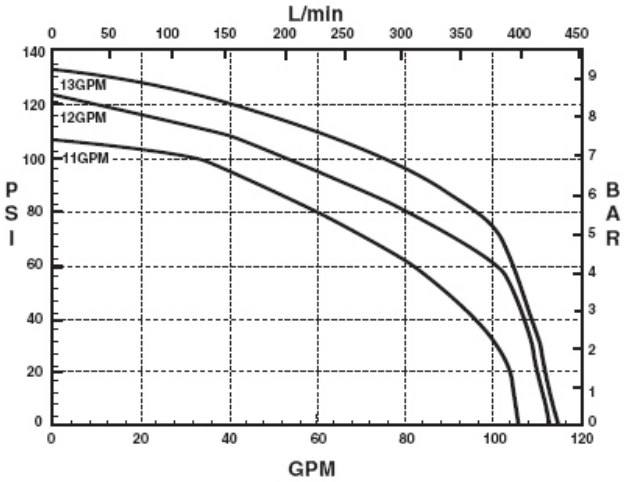

9303C-HM1C-SP Performance at 11 GPM

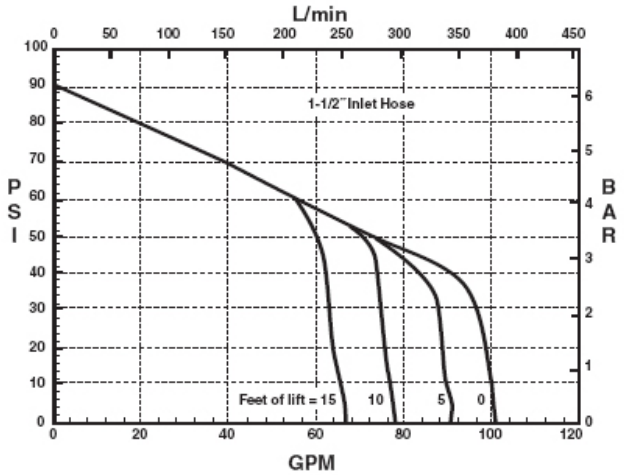

9303C-HM1C-SP Performance at 12 GPM

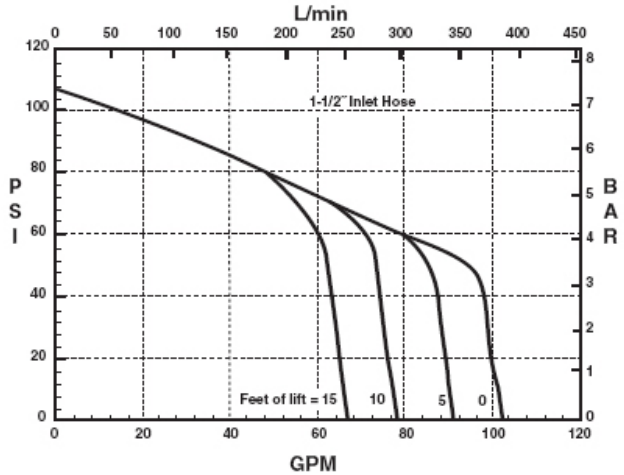

9303

9303C-HM1C-SP Performance at 13 GPM

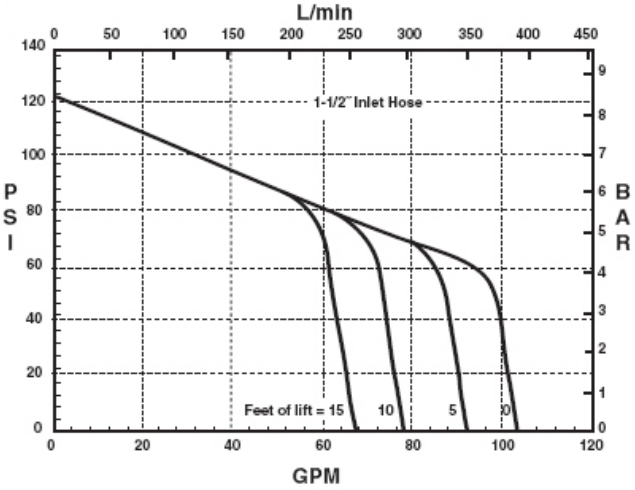

9303

9303C-HM2C-SP Performance at 5 GPM

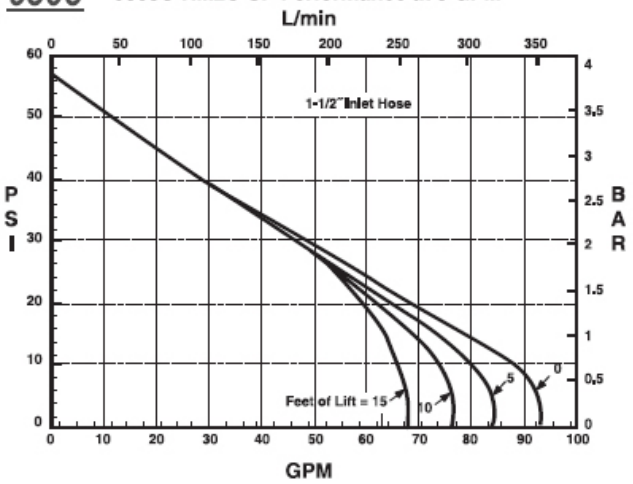

9303C-HM2C & 9303S-HM2C

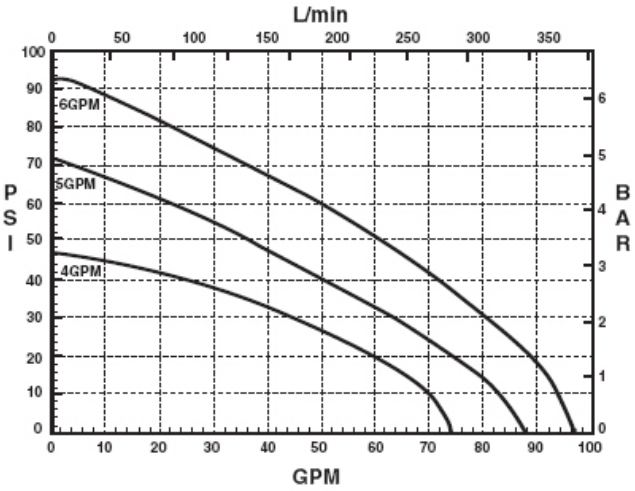

9303C-HM2C-SP Performance at 6 GPM

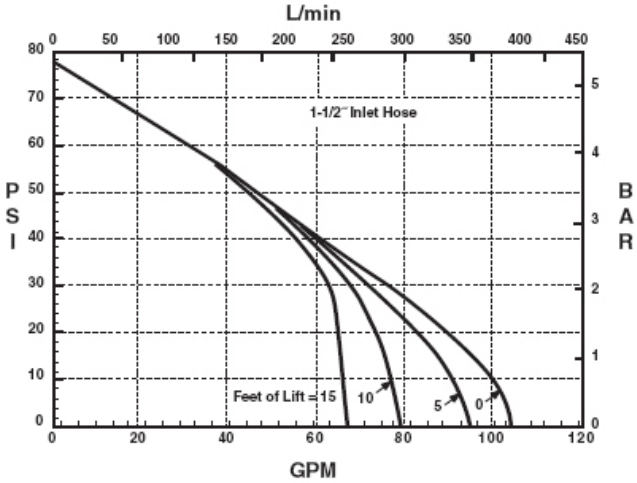

9303C-HM2C-SP Performance at 4 GPM

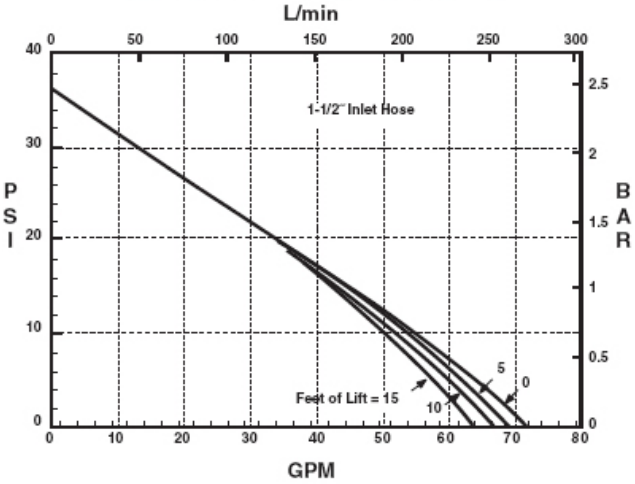

9303C-HM3C & 9303S-HM3C

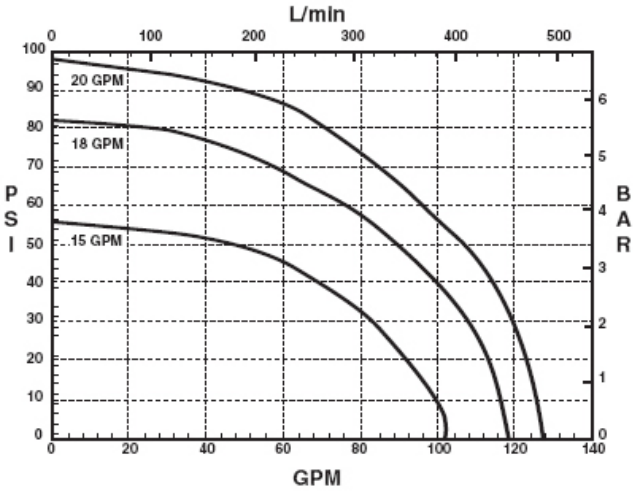

9303 9303C-HM3C-SP Performance at 15 GPM

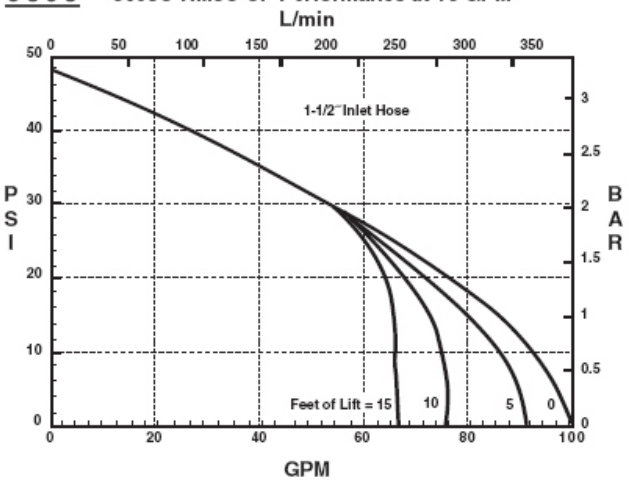

9303 9303C-HM4C & 9303S-HM4C

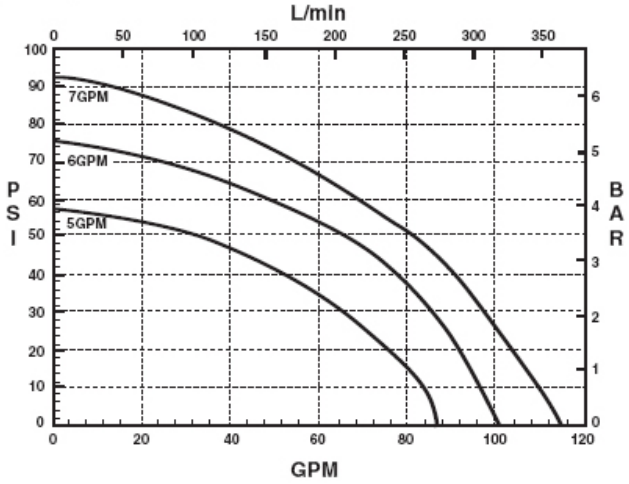

9303C-HM3C-SP Performance at 18 GPM

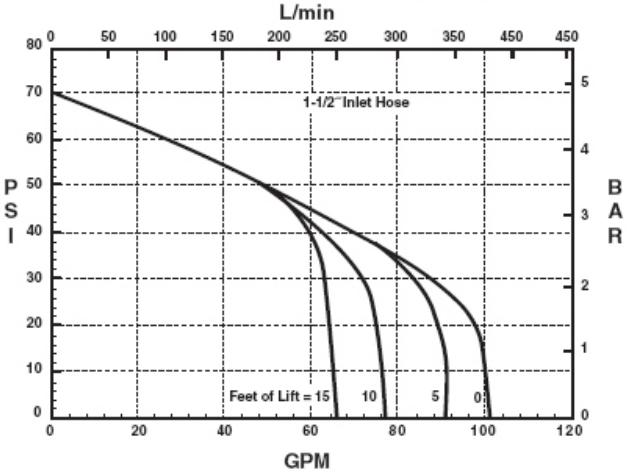

9303C-HM5C & 9303S-HM5C

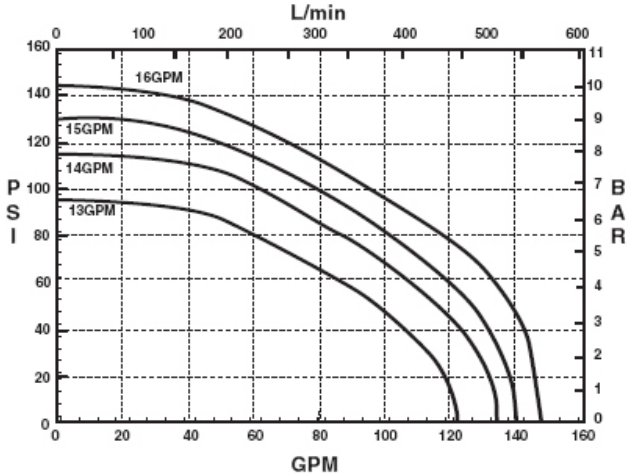

9303C-HM3C-SP Performance at 20 GPM

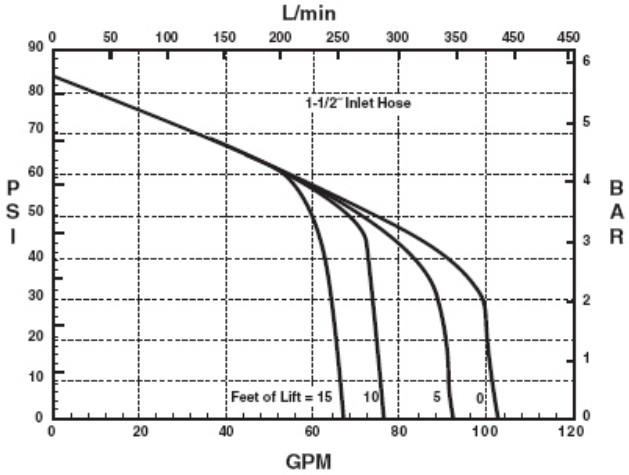

9303C-HM5C-SP Performance at 13 GPM

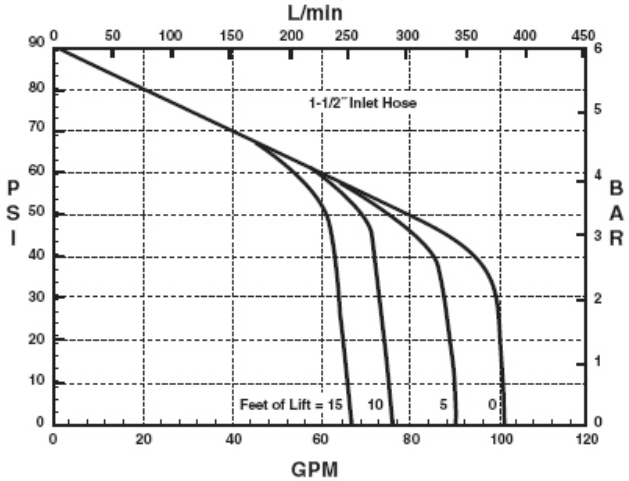

9303 9303C-HM5C-SP Performance at 14 GPM

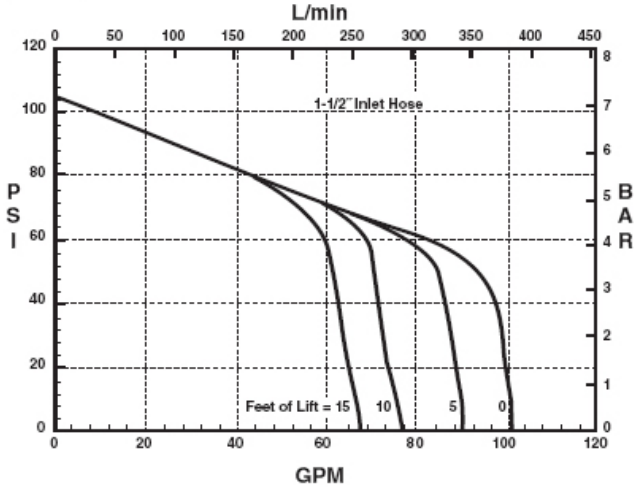

9303 9303P-HM2C

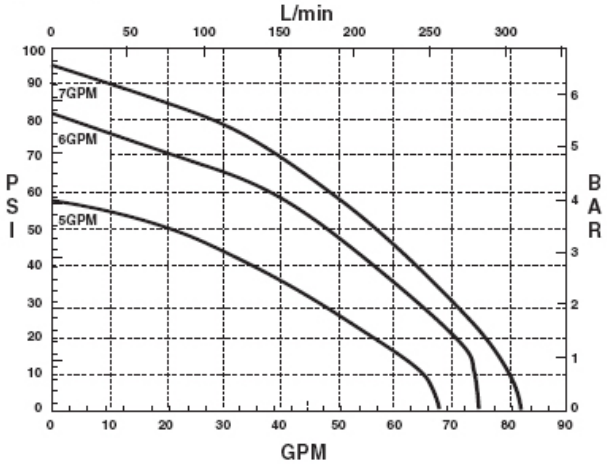

9303C-HM5C-SP Performance at 15 GPM

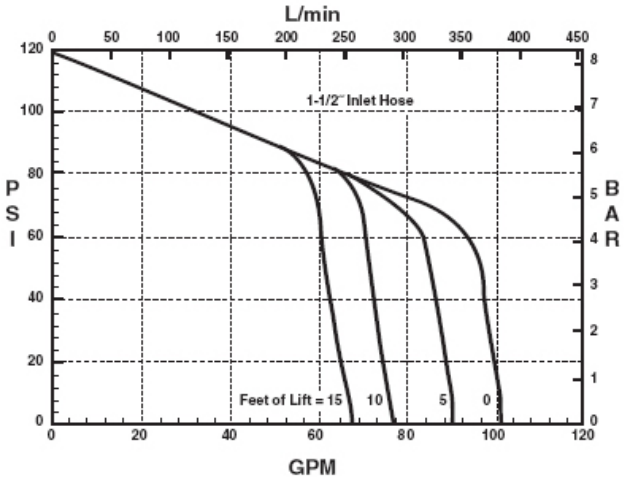

9303P-HM3C

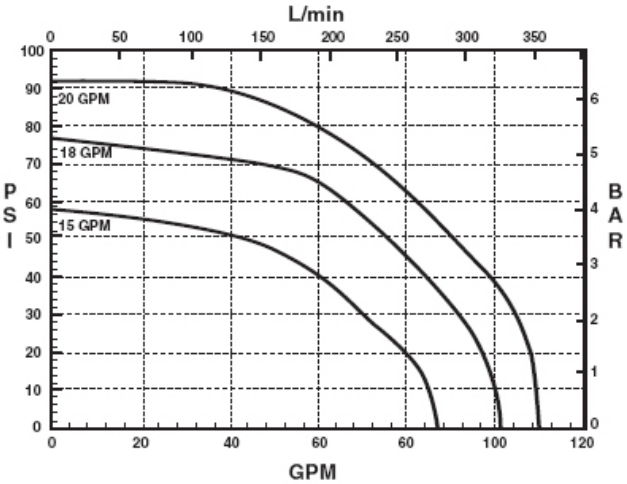

9303P-HM1C

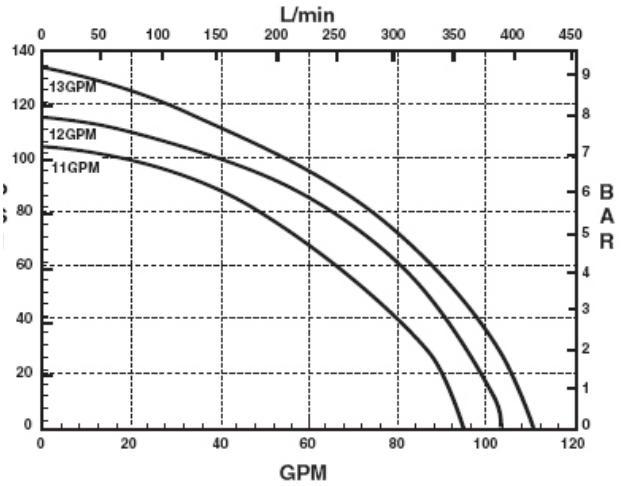

9303P-HM4C

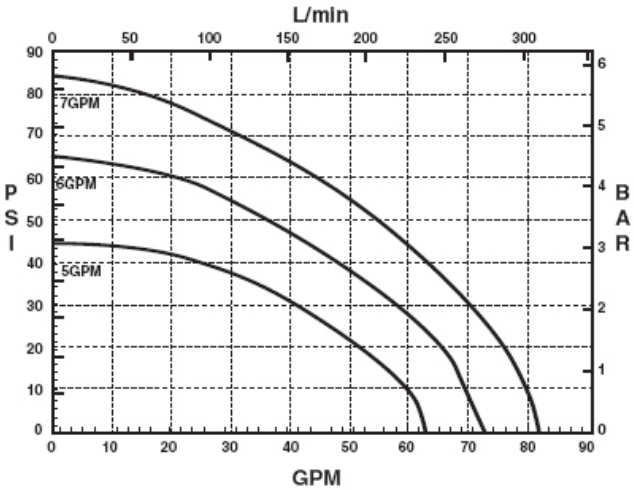

Performance Graphs

9303

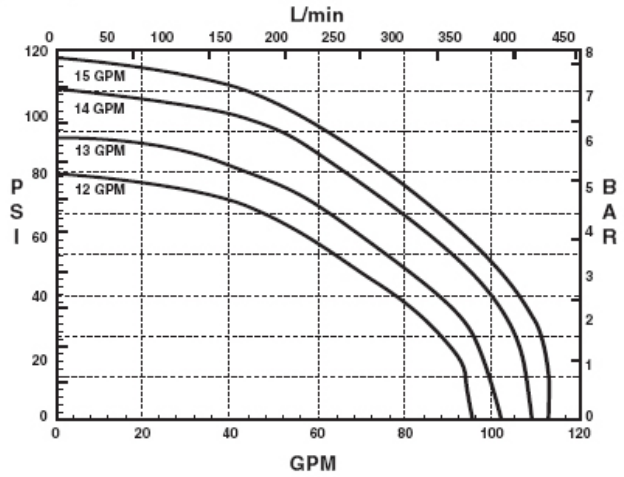

9304

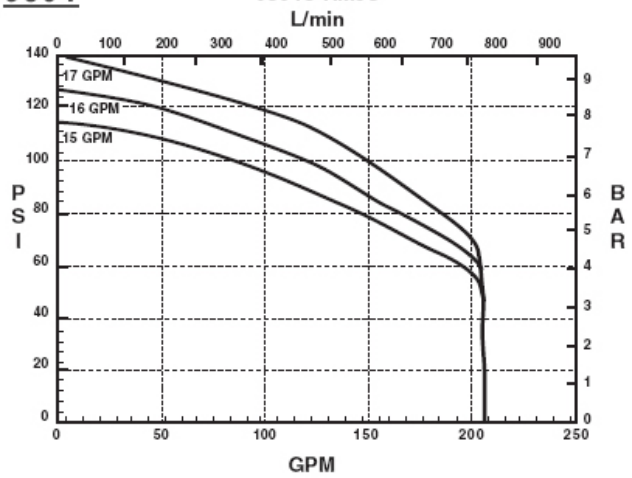

9304

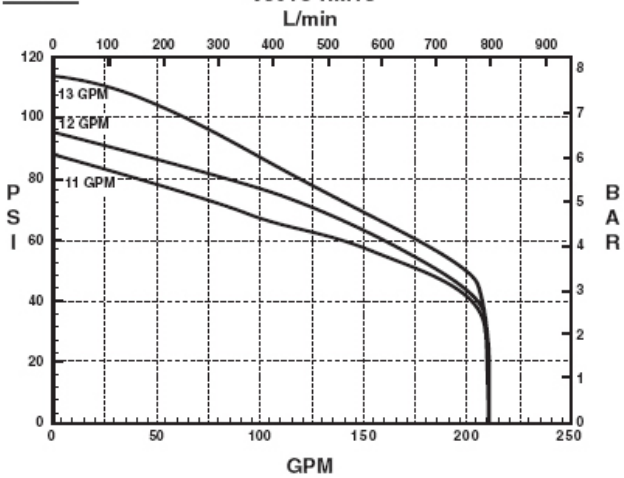

9305

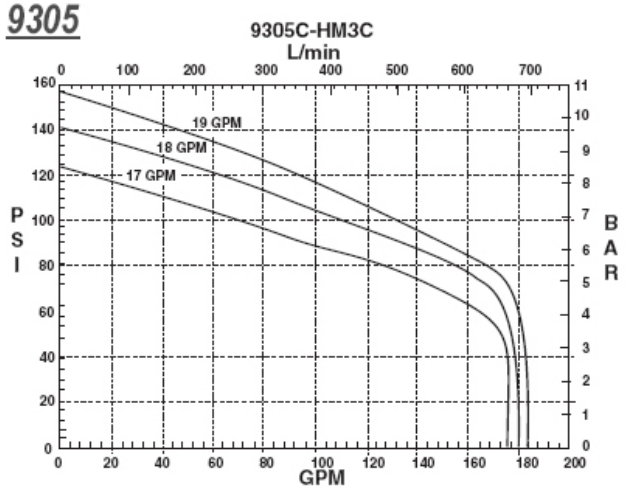

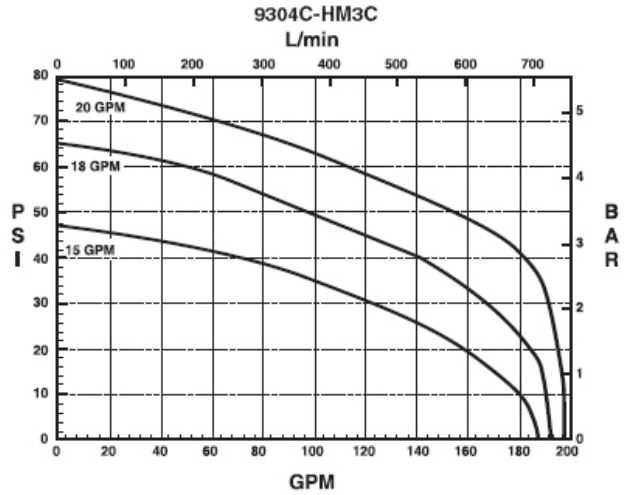

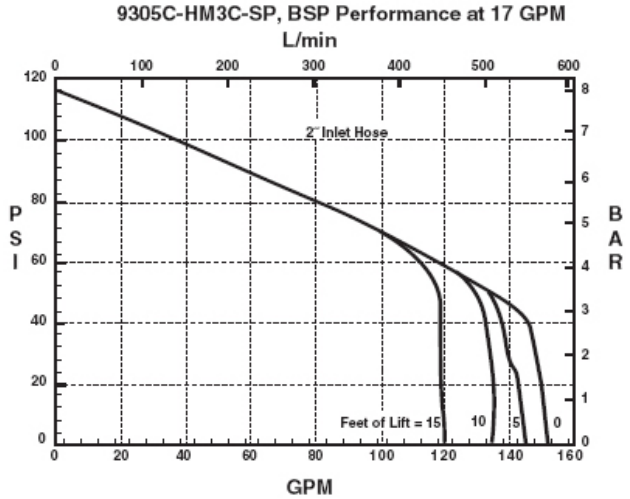

9305

9305C-HM3C-SP, BSP Performance at 18 GPM

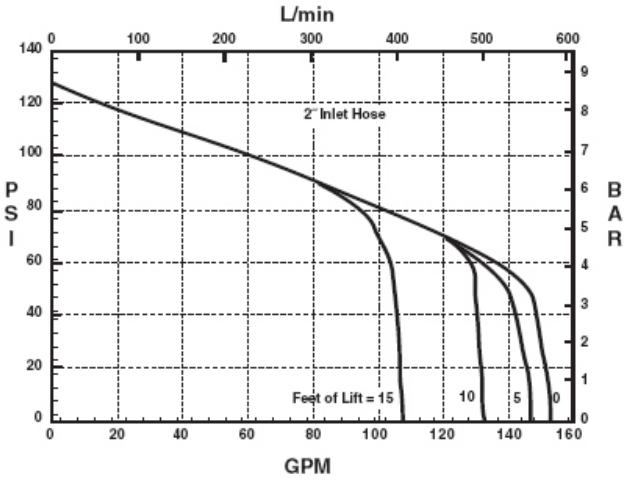

9305C-HM3C-SP, BSP Performance at 19 GPM

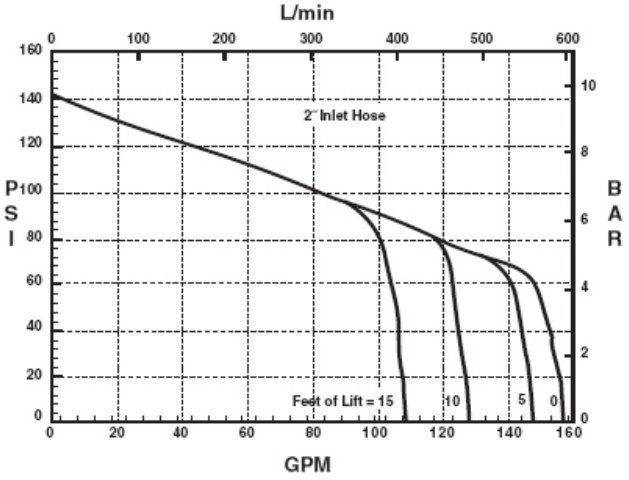

9306

9306C-HM1C & 9306S-HM1C

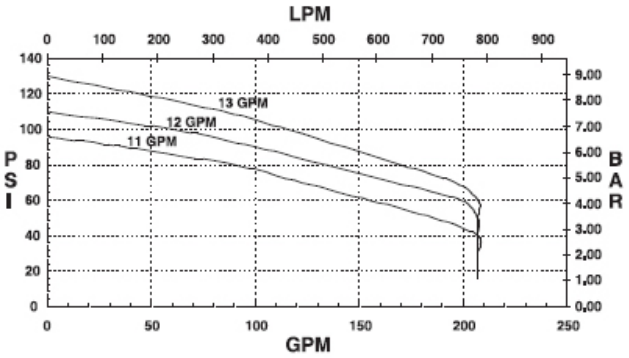

9306C-HM3C & 9306S-HM3C

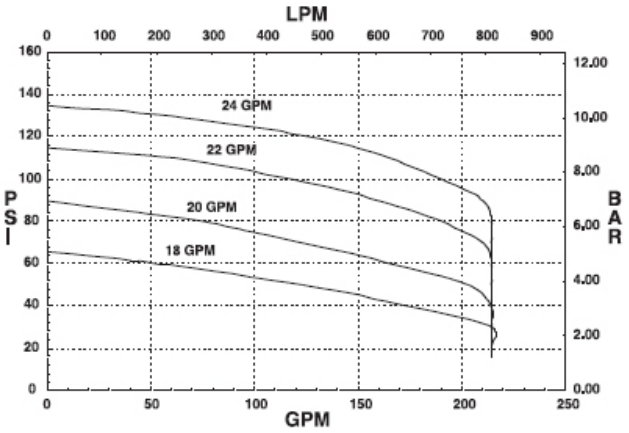

9306C-HM5C & 9306S-HM5C

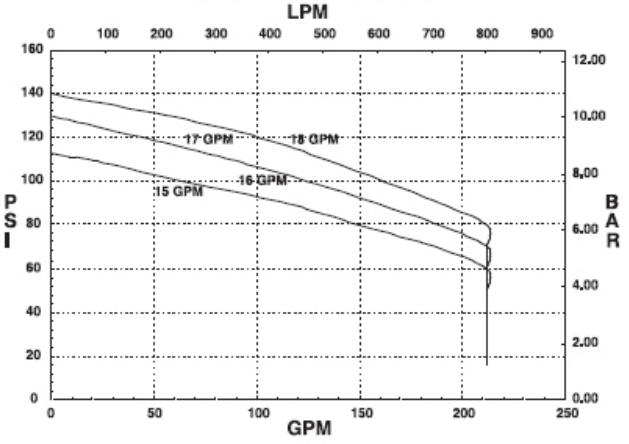

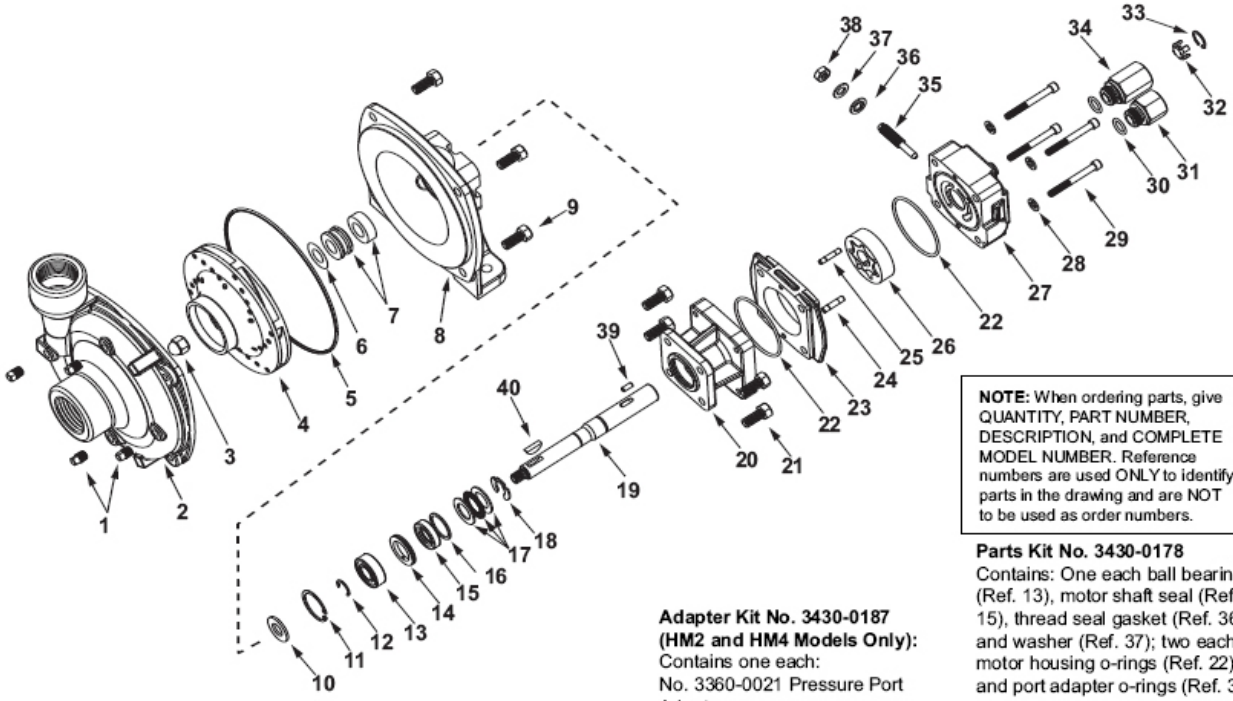

NOTE: When ordering parts, give QUANTITY, PART NUMBER, DESCRIPTION, and COMPLETE MODEL NUMBER. Reference numbers are used ONLY to identify parts in the drawing and are NOT to be used as order numbers.

Parts Kit No. 3430-0178
Contains: One each ball bearing (Ref. 13), motor shaft seal (Ref. 15), thread seal gasket (Ref. 36), and washer (Ref. 37); two each motor housing o-rings (Ref. 22), and port adapter o-rings (Ref. 30).

Repair Parts Kit No. 3430-0332
Contains: One o-ring (Ref. 5), one rubber gasket (Ref. 6), and one mechanical seal (Ref. 7).

Silicon Seal Kit No. 3430-0589
Contains one each:
1720-0083 o-ring (Ref. 5)
and mechanical seal (silicon carbide) (Ref.7).

Adapter Kit No. 3430-0187 (HM2 and HM4 Models Only):
Contains one each:
No. 3360-0021 Pressure Port Adapter
No. 3373-0020 (Size #1)
No. 3373-0021 (Size #2)
No. 3373-0022 (Size #3).
No. 1720-0108 Adapter O-ring and
No. 1720-0105 Orifice O-ring (Qty 3)

Hydraulic Motor Part Nos.
2500-0009C (HM1C Models)
2500-0010C (HM2C Models)
2500-0012C (HM4C Models)

Ref. No.	Qty. Req'd.	Part No.	Description
1	4	2406-0007	Drain/Vent Plug (9302C)
1	4	2406-0016	Drain/Vent Plug (9302S)
2	1	0150-9200C	Pump Casing (9302C)
2	1	0156-9200S	Pump Casing (Model 9302S)
3	1	2253-0002	Impeller Nut (9302C)
3	1	2253-0006	Impeller Nut (Model 9302S)
4	1	0401-9100P	Impeller (Nyglass, std. 9302C)
4	1	0402-9100P	Impeller (Optional Polypropylene) (Std 9302S)
5	1	1720-0083	O-ring
6	1	1700-0100	Rubber Gasket (9302C)
7	1	2120-0009	Mechanical Seal (Viton) (Std 9302C)
7	1	3430-0589	Mechanical Seal (Silicon Carbide) (9302S)
8	1	0750-9300C	Mounting Flange (9302C)
8	1	0756-9300S	Mounting Flange (Model 9302S)
9	4	2210-0020	Hex Head Cap Screw (9302C)
9	4	2210-0125	Hex Head Cap Screw (Model 9302S)
10	1	1410-0056	Slinger Ring
11	1	1820-0013	Retaining Ring
12	1	1810-0014	Snap Ring
13	1	2000-0010	Ball Bearing
14	1	1410-0073	Spacer
15	1	2104-0005	Shaft Seal
16	1	1410-0074	Seal Spacer
17	1	2029-0014	Thrust Bearing Assembly—Consists of: (1) Thrust Bearing & (2) Thrust Brg. Races
18	1	1810-0026	Snap Ring
19	1	0509-2500	Shaft (HM2C & HM4C Models) 6 3/4" Long
19	1	0511-2501	Shaft (HM1C) 7" Long
20	1	0151-2500C	Motor Body (Includes Main Bearing)

Ref. No.	Qty. Req'd.	Part No.	Description
21	4	2210-0005	Hex Head Cap Screw
22	2	1720-0110	O-ring
23	1	0701-2500C1	Gerotor Housing (HM2C Models) 1/4" Wide
23	1	0700-2500C1	Gerotor Housing (HM1C Models) 1/2" Wide
23	1	0703-2500C1	Gerotor Housing (HM4C Models) 5/16" Wide
24	1	1600-0045	Dowel Pin (HM2C & HM4C Models)
24	1	1600-0044	Dowel Pin (HM1C)
25	1	1600-0042	Dowel Pin (HM2C & HM4C Models)
25	1	1600-0037	Dowel Pin (HM1C)
26	1	3900-0022	Gerotor (HM1C Models)
26	1	3900-0023	Gerotor (HM2C Models)
26	1	3900-0025	Gerotor (HM4C Models)
27	1	0251-2500C2	Motor End Plate (Includes Main Bearing)
28	4	2270-0039	Washer
29	4	2220-0045	Cap Screw (HM2C & HM4C Models)
29	4	2220-0021	Cap Screw (HM1C)
30	2	1720-0108	O-ring
31	1	3360-0021	Pressure Port Adapter
32	1	3260-0068	Poppet
33	1	1820-0038	Retaining Ring
34	1	3320-0049	Tank Port Adapter
35	1	3220-0029	Bypass Adjusting Screw
36	1	1700-0047	Gasket
37	1	2270-0027	Washer
38	1	2250-0038	Lock Nut
39	1	1610-0032	Roll Pin (HM2C & HM4C Models)
39	1	1610-0031	Roll Pin (HM1C)
40	1	1610-0012	Woodruff Key(9302C)
40	1	04432	S.S. Woodruff Key (Model 9302S)

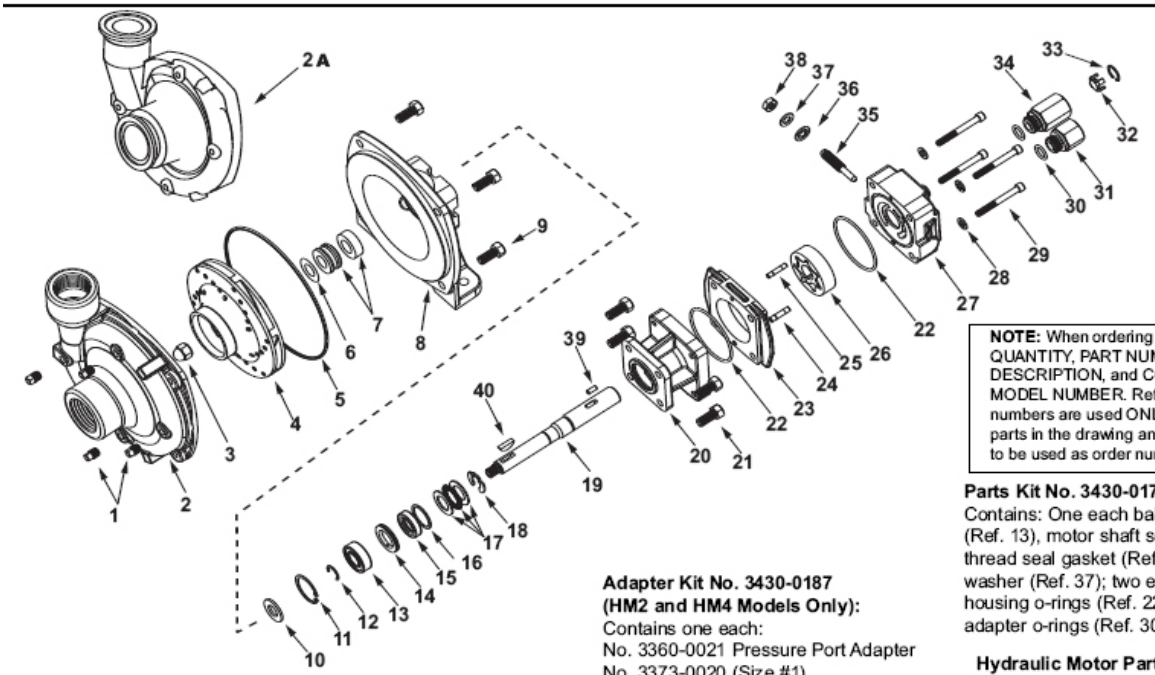

NOTE: When ordering parts, give QUANTITY, PART NUMBER, DESCRIPTION, and COMPLETE MODEL NUMBER. Reference numbers are used ONLY to identify parts in the drawing and are NOT to be used as order numbers.

Parts Kit No. 3430-0178
Contains: One each ball bearing (Ref. 13), motor shaft seal (Ref. 15), thread seal gasket (Ref. 36), and washer (Ref. 37); two each motor housing o-rings (Ref. 22), and port adapter o-rings (Ref. 30).

Hydraulic Motor Part Nos.
2500-0009C (HM1C Models)
2500-0010C (HM2C Models)
2500-0011C (HM3C Models)
2500-0012C (HM4C Models)
2500-0018C (HM5C Models)

Repair Parts Kit No. 3430-0332
Contains: One o-ring (Ref. 5), one rubber gasket (Ref. 6), and one mechanical seal (Ref. 7).

Silicon Seal Kit No. 3430-0589
Contains one each:
1720-0083 o-ring (Ref. 5)
and one mechanical seal (silicon carbide) (Ref.7).

Adapter Kit No. 3430-0187
(HM2 and HM4 Models Only):
Contains one each:
No. 3360-0021 Pressure Port Adapter
No. 3373-0020 (Size #1)
No. 3373-0021 (Size #2)
No. 3373-0022 (Size #3).
No. 1720-0108 Adapter O-ring and
No. 1720-0105 Orifice O-ring (Qty 3).

Ref. No.	Qty. Req'd.	Part No.	Description
1	4	2406-0007	Drain/Vent Plug (9303C)
1	4	2406-0016	Drain/Vent Plug (9303S)
2	1	0150-9000C	Pump Casing (Model 9303C)
2	1	0150-9000S	Pump Casing (Model 9303S)
2A	1	0153-9000C	Pump Casing (Universal Flange)
3	1	2253-0002	Impeller Nut (9303C)
3	1	2253-0006	Impeller Nut (Model 9303S)
4	1	0401-9100P	Impeller (Nyglass, std.)(9303C)
4	1	0402-9100P	Impeller (Optional Polypropylene) (Std 9303S)
5	1	1720-0083	O-ring
6	1	1700-0100	Rubber Gasket (9303C)
7	1	2120-0009	Mechanical Seal (Viton) (Std 9303C)
7	1	3430-0589	Mechanical Seal (Silicon Carbide) (Std 9303S)
8	1	0750-9300C	Mounting Flange
8	1	0756-9300S	Mounting Flange (Model 9303S)
9	4	2210-0020	Hex Head Cap Screw (9303C)
9	4	2210-0125	Hex Head Cap Screw (Model 9303S)
10	1	1410-0056	Slinger Ring
11	1	1820-0013	Retaining Ring
12	1	1810-0014	Snap Ring
13	1	2000-0010	Ball Bearing
14	1	1410-0073	Spacer
15	1	2104-0005	Shaft Seal
16	1	1410-0074	Seal Spacer
17	1	2029-0014	Thrust Bearing Assembly—Consists of: (1) Thrust Bearing & (2) Thrust Brg. Races
18	1	1810-0026	Snap Ring
19	1	0509-2500	Shaft (HM2C & HM4C Models) 6-3/4" Long
19	1	0511-2501	Shaft (HM1C & HM5C Models) 7" Long
19	1	0510-2500	Shaft (HM3C Models) 7 -1/2" Long
20	1	0151-2500C	Motor Body (Includes Main Bearing)
21	4	2210-0005	Hex Head Cap Screw
22	2	1720-0110	O-ring
23	1	0701-2500C1	Gerotor Housing (HM2C Models) 1/4" Wide

Ref. No.	Qty. Req'd.	Part No.	Description
23	1	0700-2500C1	Gerotor Housing (HM1C Models) 1/2" Wide
23	1	0703-2500C1	Gerotor Housing (HM4C Models) 5/16" Wide
23	1	0702-2500C1	Gerotor Housing (HM3C Models) 1" Wide
23	1	0704-2500C1	Gerotor Housing (HM5C Models) 5/8" Wide
24	1	1600-0045	Dowel Pin (HM2C & HM4C Models)
24	1	1600-0044	Dowel Pin (HM1C & HM5CModels)
24	1	1600-0052	Dowel Pin (HM3C Models)
25	1	1600-0042	Dowel Pin (HM2C & HM4C Models)
25	1	1600-0037	Dowel Pin (HM1C & HM5C Models)
25	1	1600-0068	Dowel Pin (HM3C Models)
26	1	3900-0022	Gerotor (HM1C Models)
26	1	3900-0023	Gerotor (HM2C Models)
26	1	3900-0024	Gerotor (HM3C Models)
26	1	3900-0025	Gerotor (HM4C Models)
26	1	3900-0048	Gerotor (HM5C Models)
27	1	0251-2500C2	Motor End Plate (Includes Main Bearing)
28	4	2270-0039	Washer
29	4	2220-0045	Cap Screw (HM2C & HM4C Models)
29	4	2220-0021	Cap Screw (HM1C)
29	4	2220-0044	Cap Screw (HM3C Models)
29	4	2220-0032	Cap Screw (HM5C)
30	2	1720-0108	O-ring
31	1	3360-0021	Pressure Port Adapter
32	1	3260-0068	Poppet
33	1	1820-0038	Retaining Ring
34	1	3320-0049	Tank Port Adapter
35	1	3220-0029	Bypass Adjusting Screw
36	1	1700-0047	Gasket
37	1	2270-0027	Washer
38	1	2250-0038	Lock Nut
39	1	1610-0032	Roll Pin (HM2C & HM4C Models)
39	1	1610-0031	Roll Pin (HM1C & HM5C Models)
39	1	1610-0055	Roll Pin (HM3C)
40	1	1610-0012	Woodruff Key (9303C)
40	1	04432	S.S. Woodruff Key (Model 9303S)

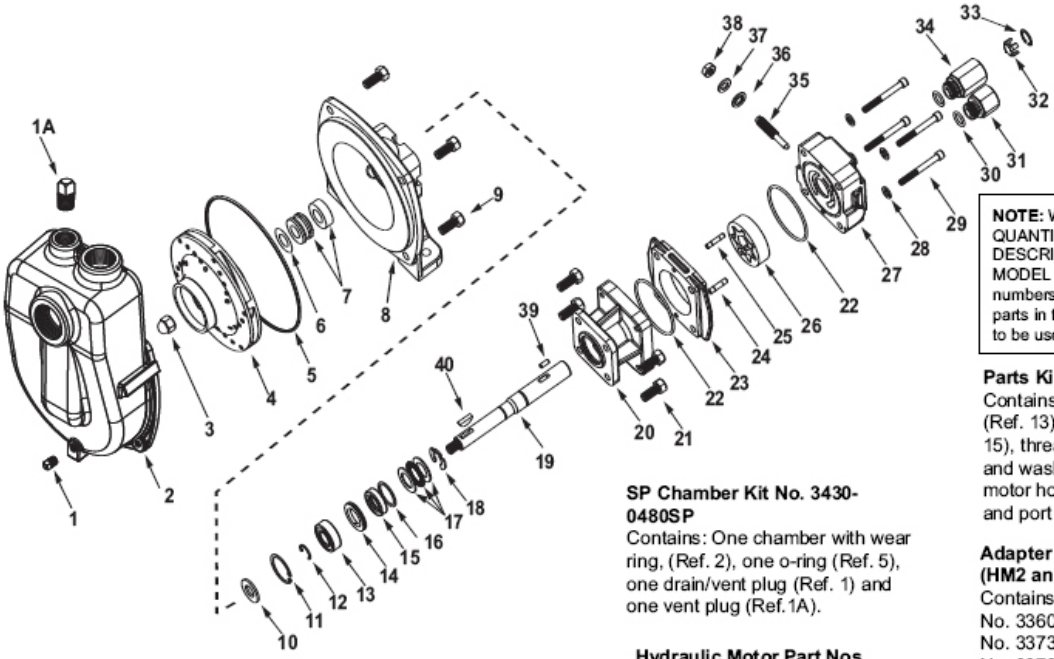

NOTE: When ordering parts, give QUANTITY, PART NUMBER, DESCRIPTION, and COMPLETE MODEL NUMBER. Reference numbers are used ONLY to identify parts in the drawing and are NOT to be used as order numbers.

Parts Kit No. 3430-0178
Contains: One each ball bearing (Ref. 13), motor shaft seal (Ref. 15), thread seal gasket (Ref. 36), and washer (Ref. 37); two each motor housing o-rings (Ref. 22), and port adapter o-rings (Ref. 30).

Adapter Kit No. 3430-0187 (HM2 and HM4 Models Only):
Contains one each:
No. 3360-0021 Pressure Port Adapter
No. 3373-0020 (Size #1)
No. 3373-0021 (Size #2)
No. 3373-0022 (Size #3).
No. 1720-0108 Adapter O-ring and
No. 1720-0105 Orifice O-ring (Qty 3).

SP Chamber Kit No. 3430-0480SP
Contains: One chamber with wear ring, (Ref. 2), one o-ring (Ref. 5), one drain/vent plug (Ref. 1) and one vent plug (Ref. 1A).

Hydraulic Motor Part Nos.
2500-0009C (HM1C Models)
2500-0010C (HM2C Models)
2500-0011C (HM3C Models)
2500-0012C (HM4C Models)
2500-0018C (HM5C Models)

Repair Parts Kit No. 3430-0332
Contains: One o-ring (Ref. 5), one rubber gasket (Ref. 6), and one mechanical seal (Ref 7.).

Silicon Seal Kit No. 3430-0589
Contains one each:
1720-0083 o-ring (Ref. 5)
and mechanical seal (silicon carbide) (Ref. 7).

Ref. No.	Qty. Req'd.	Part No.	Description
1	4	2406-0007	Drain/Vent Plug (9303C)
1A	4	2406-0001	Vent Plug
2	1	3430-0480SP	Pump Casing (Self Priming)
3	1	2253-0002	Impeller Nut (9303C)
4	1	0401-9100P	Impeller (Nyglass, std.)
4	1	0402-9100P	Impeller (Optional Polypropylene)
5	1	1720-0083	O-ring
6	1	1700-0100	Rubber Gasket
7	1	2120-0009	Mechanical Seal (Viton) (Std)
7	1	3430-0589	Mechanical Seal (Silicon Carbide) (Optional)
8	1	0750-9300C	Mounting Flange
9	4	2210-0020	Hex Head Cap Screw
9	4	2210-0125	Hex Head Cap Screw
10	1	1410-0056	Slinger Ring
11	1	1820-0013	Retaining Ring
12	1	1810-0014	Snap Ring
13	1	2000-0010	Ball Bearing
14	1	1410-0073	Spacer
15	1	2104-0005	Shaft Seal
16	1	1410-0074	Seal Spacer
17	1	2029-0014	Thrust Bearing Assembly—Consists of: (1) Thrust Bearing & (2) Thrust Brg. Races
18	1	1810-0026	Snap Ring
19	1	0509-2500	Shaft (HM2C & HM4C Models) 6 3/4" Long
19	1	0511-2501	Shaft (HM1C & HM5C Models) 7" Long
19	1	0510-2500	Shaft (HM3C Models) 7 1/2" Long
20	1	0151-2500C	Motor Body (Includes Main Bearing)
21	4	2210-0005	Hex Head Cap Screw
22	2	1720-0110	O-ring
23	1	0701-2500C	Gerotor Housing (HM2C Models) 1/4" Wide
23	1	0700-2500C1	Gerotor Housing (HM1C Models) 1/2" Wide
23	1	0703-2500C	Gerotor Housing (HM4C Models) 5/16" Wide

Ref. No.	Qty. Req'd.	Part No.	Description
23	1	0702-2500C	Gerotor Housing (HM3C Models) 1" Wide
23	1	0704-2500C	Gerotor Housing (HM5C Models) 5/8" Wide
24	1	1600-0045	Dowel Pin (HM2C & HM4C Models)
24	1	1600-0044	Dowel Pin (HM1C & HM5C Models)
24	1	1600-0052	Dowel Pin (HM3C Models)
25	1	1600-0042	Dowel Pin (HM2C & HM4C Models)
25	1	1600-0037	Dowel Pin (HM1C & HM5C Models)
25	1	1600-0068	Dowel Pin (HM3C Models)
26	1	3900-0022	Gerotor (HM1C Models)
26	1	3900-0023	Gerotor (HM2C Models)
26	1	3900-0024	Gerotor (HM3C Models)
26	1	3900-0025	Gerotor (HM4C Models)
26	1	3900-0048	Gerotor (HM5C Models)
27	1	0251-2500C2	Motor End Plate (Includes Main Bearing)
28	4	2270-0039	Washer
29	4	2220-0045	Cap Screw (HM2C & HM4C Models)
29	4	2220-0021	Cap Screw (HM1C)
29	4	2220-0044	Cap Screw (HM3C Models)
29	4	2220-0032	Cap Screw (HM5C)
30	2	1720-0108	O-ring
31	1	3360-0021	Pressure Port Adapter
32	1	3260-0068	Poppet
33	1	1820-0038	Retaining Ring
34	1	3320-0049	Tank Port Adapter
35	1	3220-0029	Bypass Adjusting Screw
36	1	1700-0047	Gasket
37	1	2270-0027	Washer
38	1	2250-0038	Lock Nut
39	1	1610-0032	Roll Pin (HM2C & HM4C Models)
39	1	1610-0031	Roll Pin (HM1C & HM5C Models)
39	1	1610-0055	Roll Pin (HM3C)
40	1	1610-0012	Woodruff Key

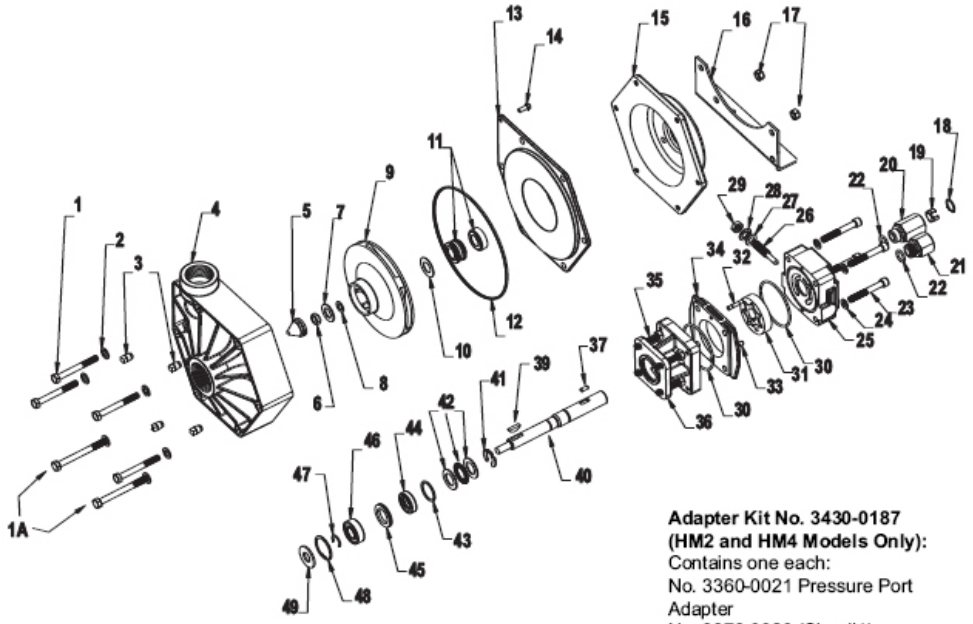

NOTE: When ordering parts, give QUANTITY, PART NUMBER, DESCRIPTION, and COMPLETE MODEL NUMBER. Reference numbers are used ONLY to identify parts in the drawing and are NOT to be used as order numbers.

Parts Kit No. 3430-0178
Contains: One each ball bearing (Ref. 46), motor shaft seal (Ref. 44), thread seal gasket (Ref. 27), and washer (Ref. 28); two each motor housing o-rings (Ref. 30), and port adapter o-rings (Ref. 22)

Hydraulic Motor Part Nos.
2500-0019C (HM1C Models)
2500-0022C (HM2C Models)
2500-0013C (HM3C Models)
2500-0014C (HM4C Models)
2500-0021C (HM5C Models)

Adapter Kit No. 3430-0187 (HM2 and HM4 Models Only):
Contains one each:
No. 3360-0021 Pressure Port Adapter
No. 3373-0020 (Size #1)
No. 3373-0021 (Size #2)
No. 3373-0022 (Size #3).
No. 1720-0108 Adapter O-ring and
No. 1720-0105 Orifice O-ring (Qty 3).

Repair Parts Kit No. 3430-0445
Contains: One o-ring (Ref. 12), one rubber gasket (Ref. 10), one mechanical seal (Ref. 11), one gasket (Ref. 7) and one washer (Ref. 8).

Silicon Seal Parts Kit # 3430-0593
Contains one each:
mechanical seal (Ref. 11) and o-ring (Ref. 12).

Ref. No.	Qty. Req'd.	Part No.	Description
1	4	2210-0087	Hex Head Cap Screw
1A	2	2210-0016	Hex Head Cap Screw (Base Only)
2	6	2270-0041	Washer
3	4	2406-0020	Pipe Plug
4	1	0700-9000P	Pump Casing
5	1	2250-0052	Impeller Nut
6	1	2250-0051	Jam Nut
7	1	1700-0097	Gasket (Viton)
8	1	2270-0057	Washer
9	1	0402-9100P	Impeller
10	1	1700-0100	Rubber Gasket
11	1	2120-0009	Mechanical Seal (Std)
11	1	3430-0593	Mechanical Seal (Silicon Carbide)(Optional)
12	1	1721-0083	O-Ring
13	1	0750-9300P	Cover
14	1	2210-0088	Screw
15	1	0750-9006C	Intermediate Flange
16	1	1510-0063	Base Plate
17	2	2250-0008	Hex Nut
18	1	1820-0038	Retaining Ring
19	1	3260-0068	Poppet
20	1	3320-0049	Check Valve Body
21	1	3360-0021	Pressure Port Adapter
22	2	1720-0108	O-ring
23	4	2220-0045	Socket Head Cap Screw (HM2, HM4C Model)
23	4	2220-0044	Socket Head Cap Screw (HM3C Model)
23	4	2220-0021	Socket Head Cap Screw (HM1C Model)
23	4	2220-0032	Socket Head Cap Screw (HM5C)
24	4	2270-0039	Washer
25	1	0251-2500C2	Motor End Plate: Includes (1) Main Bearing
26	1	3220-0029	Valve Stem
27	1	1700-0047	Gasket
28	1	2270-0027	Washer
29	1	2250-0038	Lock Nut
30	2	1720-0110	O-Ring
31	1	3900-0022	Gerotor (HM1C Models)

Ref. No.	Qty. Req'd.	Part No.	Description
31	1	3900-0023	Gerotor (HM2C Models)
31	1	3900-0024	Gerotor (HM3C Models)
31	1	3900-0025	Gerotor (HM4C Models)
31	1	3900-0048	Gerotor (HM5C Models)
32	1	1600-0042	Dowel Pin (HM2C & HM4C Models)
32	1	1600-0037	Dowel Pin (HM1C & HM5C Models)
32	1	1600-0068	Dowel Pin (HM3C Models)
33	1	1600-0045	Dowel Pin (HM2C & HM4C Models)
33	1	1600-0044	Dowel Pin (HM1C & HM5CModels)
33	1	1600-0052	Dowel Pin (HM3C Models)
34	1	0701-2500C1	Gerotor Housing (HM2C Models) 1/4" Wide
34	1	0700-2500C1	Gerotor Housing (HM1C Models) 1/2" Wide
34	1	0703-2500C1	Gerotor Housing (HM4C Models) 5/16" Wide
34	1	0702-2500C1	Gerotor Housing (HM3C Models) 1" Wide
34	1	0704-2500C1	Gerotor Housing (HM5C Models) 5/8" Wide
35	4	2210-0021	Hex Head Cap Screw
36	1	0151-2500C	Motor Body: Includes (1) Main Bearing
37	1	1610-0032	Roll Pin (HM2C & HM4C Models)
37	1	1610-0031	Roll Pin (HM1C & HM5C Models)
37	1	1610-0055	Roll Pin (HM3C)
39	1	1610-0012	Woodruff Key
40	1	0507-2500	Shaft (HM2C & HM4C Models) 7-1/16" Long
40	1	0506-2501	Shaft (HM1C & HM5C Models) 7-21/64" Long
40	1	0514-2500	Shaft (HM3C Models) 7-13/16" Long
41	1	1810-0026	Snap Ring
42	1	2029-0014	Thrust Bearing Assembly - Consists of: (1) Thrust Bearing & (2) Thrust Bearing Races
43	1	1410-0074	Seal Spacer
44	1	2104-0005	Shaft Seal
45	1	1410-0073	Spacer
46	1	2000-0010	Ball Bearing
47	1	1810-0014	Snap Ring
48	1	1820-0013	Retaining Ring
49	1	1410-0056	Slinger Ring

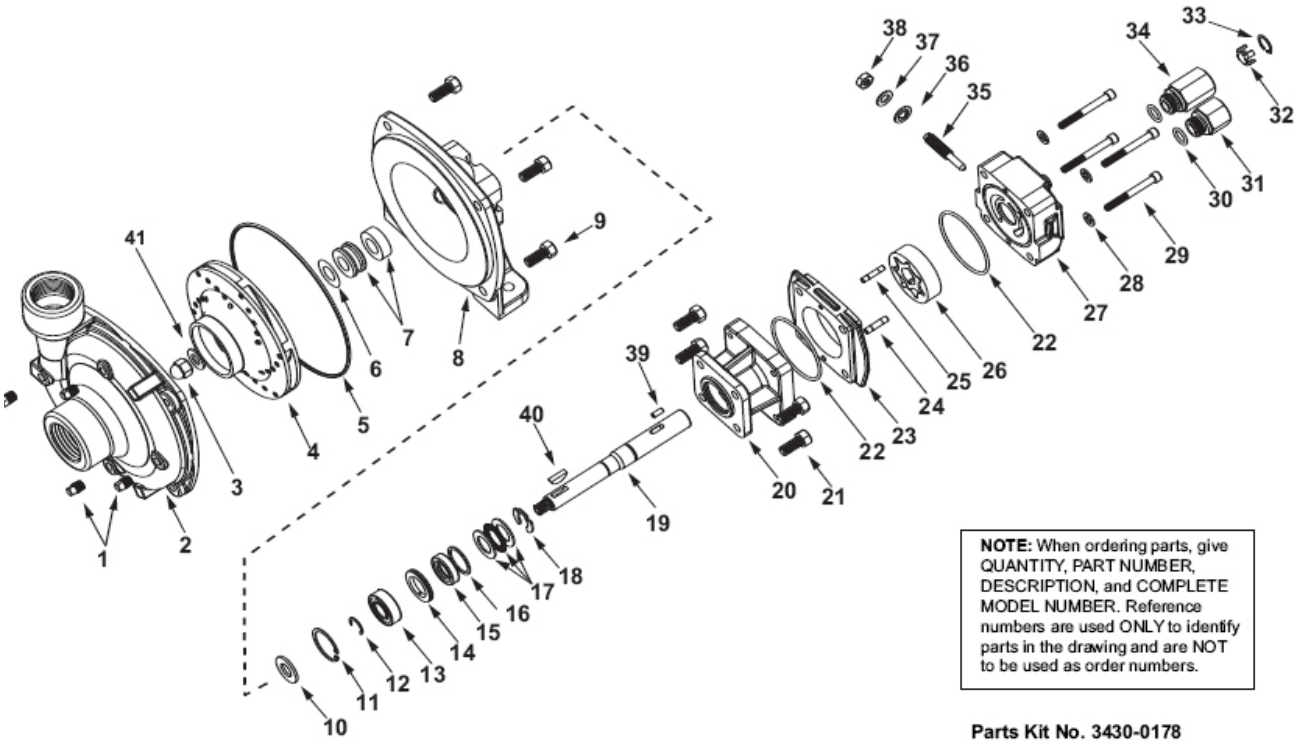

NOTE: When ordering parts, give QUANTITY, PART NUMBER, DESCRIPTION, and COMPLETE MODEL NUMBER. Reference numbers are used ONLY to identify parts in the drawing and are NOT to be used as order numbers.

Repair Parts Kit No. 3430-0332
Contains: One o-ring (Ref. 5), one rubber gasket (Ref. 6), and one mechanical seal (Ref. 7).

Silicon Seal Kit No. 3430-0589
Contains one each:
1720-0083 o-ring (Ref. 5)
and mechanical seal (silicon carbide) (Ref.7).

Hydraulic Motor Part Nos.
2500-0009C (HM1C Models)
2500-0011C (HM3C Models)
2500-0018C (HM5C Models)

Parts Kit No. 3430-0178
Contains: One each ball bearing (Ref. 13), motor shaft seal (Ref. 15), thread seal gasket (Ref. 36), and washer (Ref. 37); two each motor housing o-rings (Ref. 22), and port adapter o-rings (Ref. 30).

Ref. No.	Qty. Req'd.	Part No.	Description
1	4	2406-0007	Drain/Vent Plug
2	1	0151-9200C	Pump Casing
3	1	2253-0002	Impeller Nut
4	1	0401-9200P2	Impeller (Nyglass, std.)
4	1	0405-9200P2	Impeller (Optional Polypropylene)
5	1	1720-0083	O-ring
6	1	1700-0100	Rubber Gasket
7	1	2120-0009	Mechanical Seal (Viton) (Std)
7	1	3430-0589	Mechanical Seal (Silicon Carbide) (Optional)
8	1	0750-9300C	Mounting Flange
9	4	2210-0020	Hex Head Cap Screw
10	1	1410-0056	Slinger Ring
11	1	1820-0013	Retaining Ring
12	1	1810-0014	Snap Ring
13	1	2000-0010	Ball Bearing
14	1	1410-0073	Spacer
15	1	2104-0005	Shaft Seal
16	1	1410-0074	Seal Spacer
17	1	2029-0014	Thrust Bearing Assembly—Consists of: (1) Thrust Bearing & (2) Thrust Brg. Races
18	1	1810-0026	Snap Ring
19	1	0511-2501	Shaft (HM1C & HM5C Models) 7" Long
19	1	0510-2500	Shaft (HM3C Models) 7-1/2" Long
20	1	0151-2500C	Motor Body (Includes Main Bearing)
21	4	2210-0005	Hex Head Cap Screw
22	2	1720-0110	O-ring
23	1	0700-2500C1	Gerotor Housing (HM1C Models) 1/2" Wide

Ref. No.	Qty. Req'd.	Part No.	Description
23	1	0702-2500C1	Gerotor Housing (HM3C Models) 1" Wide
23	1	0704-2500C1	Gerotor Housing (HM5C Models) 5/8" Wide
24	1	1600-0044	Dowel Pin (HM1C & HM5CModels)
24	1	1600-0052	Dowel Pin (HM3C Models)
25	1	1600-0037	Dowel Pin (HM1C & HM5C Models)
25	1	1600-0068	Dowel Pin (HM3C Models)
26	1	3900-0022	Gerotor (HM1C Models)
26	1	3900-0024	Gerotor (HM3C Models)
26	1	3900-0048	Gerotor (HM5C Models)
27	1	0251-2500C2	Motor End Plate (Includes Main Bearing)
28	4	2270-0039	Washer
29	4	2220-0021	Cap Screw (HM1C Model)
29	4	2220-0032	Cap Screw (HM5C Model)
29	4	2220-0044	Cap Screw (HM3C Model)
30	2	1720-0108	O-ring
31	1	3360-0021	Pressure Port Adapter
32	1	3260-0068	Poppet
33	1	1820-0038	Retaining Ring
34	1	3320-0049	Tank Port Adapter
35	1	3220-0029	Bypass Adjusting Screw
36	1	1700-0047	Gasket
37	1	2270-0027	Washer
38	1	2250-0038	Lock Nut
39	1	1610-0031	Roll Pin (HM1C & HM5C Models)
39	1	1610-0055	Roll Pin (HM3C)
40	1	1610-0012	Woodruff Key
41	1	2270-0071	Washer

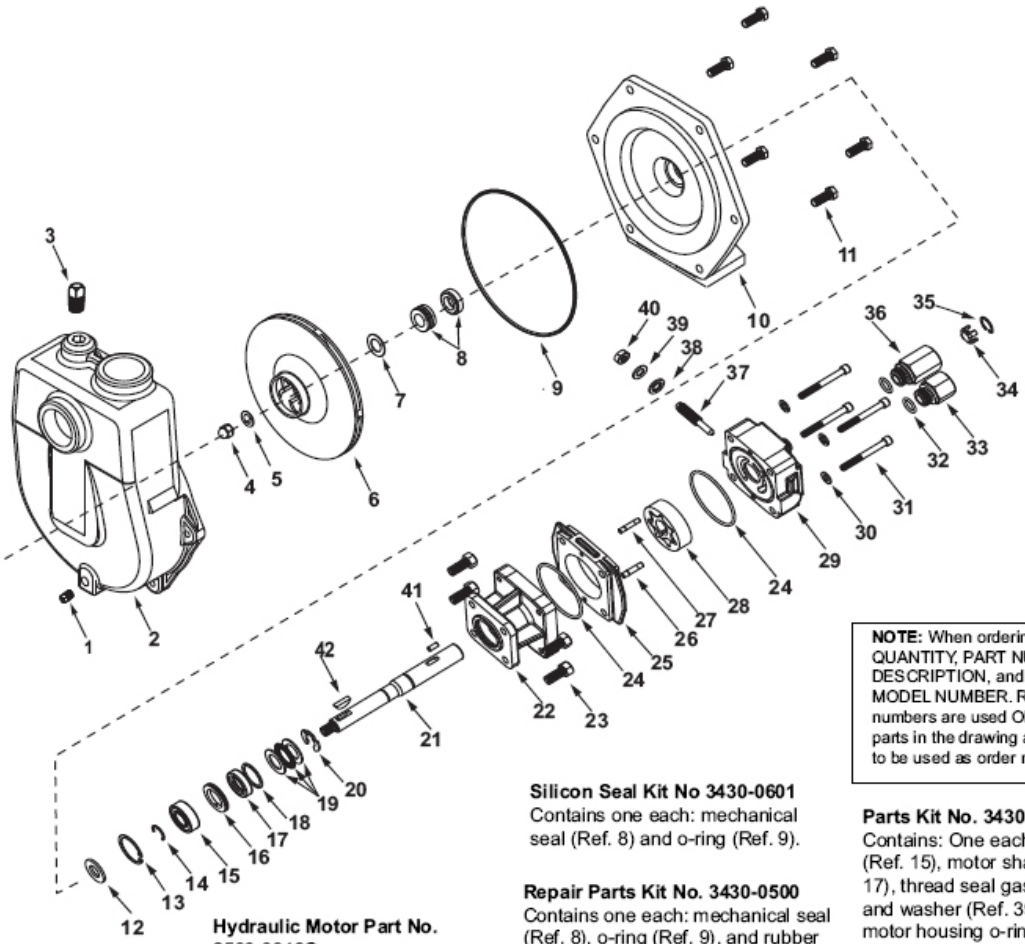

Hydraulic Motor Part No. 2500-0013C

NOTE: When ordering parts, give QUANTITY, PART NUMBER, DESCRIPTION, and COMPLETE MODEL NUMBER. Reference numbers are used ONLY to identify parts in the drawing and are NOT to be used as order numbers.

Silicon Seal Kit No 3430-0601
Contains one each: mechanical seal (Ref. 8) and o-ring (Ref. 9).

Repair Parts Kit No. 3430-0500
Contains one each: mechanical seal (Ref. 8), o-ring (Ref. 9), and rubber gasket (Ref. 7).

Parts Kit No. 3430-0178
Contains: One each ball bearing (Ref. 15), motor shaft seal (Ref. 17), thread seal gasket (Ref. 38), and washer (Ref. 39); two each motor housing o-rings (Ref. 24), and port adapter o-rings (Ref. 32).

Ref. No.	Qty. Req'd.	Part No.	Description
1	1	2406-0002	1/2" NPT Drain Plug (SP model only)
1	1	2406-0035	1/2" BSP Drain Plug (BSP model only)
2	1	3430-0481SP	Self-Priming Chamber (SP model only)— (Includes a stainless steel wear ring, plug and o-ring)
2	1	3430-0481BSP	Self-Priming Chamber (BSP model only)— (Includes a stainless steel wear ring, plug and o-ring)
3	1	2406-0034	1" NPT Prime Port Plug (SP model only)
3	1	2406-0036	1" BSP Prime Port Plug (BSP model only)
4	1	2253-0002	Impeller Nut
5	1	2270-0071	Washer
6	1	0403-9200P1	Impeller
7	1	1700-0100	Rubber Gasket
8	1	2120-0009	Mechanical Seal (standard Viton)
8	1	3430-0601	Mechanical Seal (Silicon Carbide)(Optional)
9	1	1720-0180	O-ring
10	1	0752-9200C	Mounting Flange
11	6	2210-0086	Hex Head Cap Screw
12	1	1410-0056	Slinger Ring
13	1	1820-0013	Retaining Ring
14	1	1810-0014	Snap Ring
15	1	2000-0010	Ball Bearing
16	1	1410-0073	Spacer
17	1	2104-0005	Shaft Seal
18	1	1410-0074	Seal Spacer

Ref. No.	Qty. Req'd.	Part No.	Description
19	1	2029-0014	Thrust Bearing Assembly - Consists of: (1) Thrust Bearing & (2) Thrust Brg. Races
20	1	1810-0026	Snap Ring
21	1	0514-2500	Shaft
22	1	0151-2500C	Motor Body (Includes Main Bearing)
23	4	2210-0005	Hex Head Cap Screw
24	2	1720-0110	O-ring
25	1	0702-2500C	Gerotor Housing 1" wide
26	1	1600-0052	Dowel Pin
27	1	1600-0068	Dowel Pin
28	1	3900-0024	Gerotor
29	1	0251-2500C	Motor End Plate (Includes Main Bearing)
30	1	2270-0027	Washer
31	4	2220-0044	Cap Screw
32	2	1720-0108	O-ring
33	1	3360-0021	Pressure Port Adapter
34	1	3260-0068	Poppet
35	1	1820-0038	Retaining Ring
36	1	3320-0049	Tank Port Adapter
37	1	3220-0029	Bypass Adjusting Screw
38	1	1700-0047	Gasket
39	4	2270-0039	Washer
40	1	2250-0038	Lock Nut
41	1	1610-0055	Roll Pin
42	1	1610-0053	Key

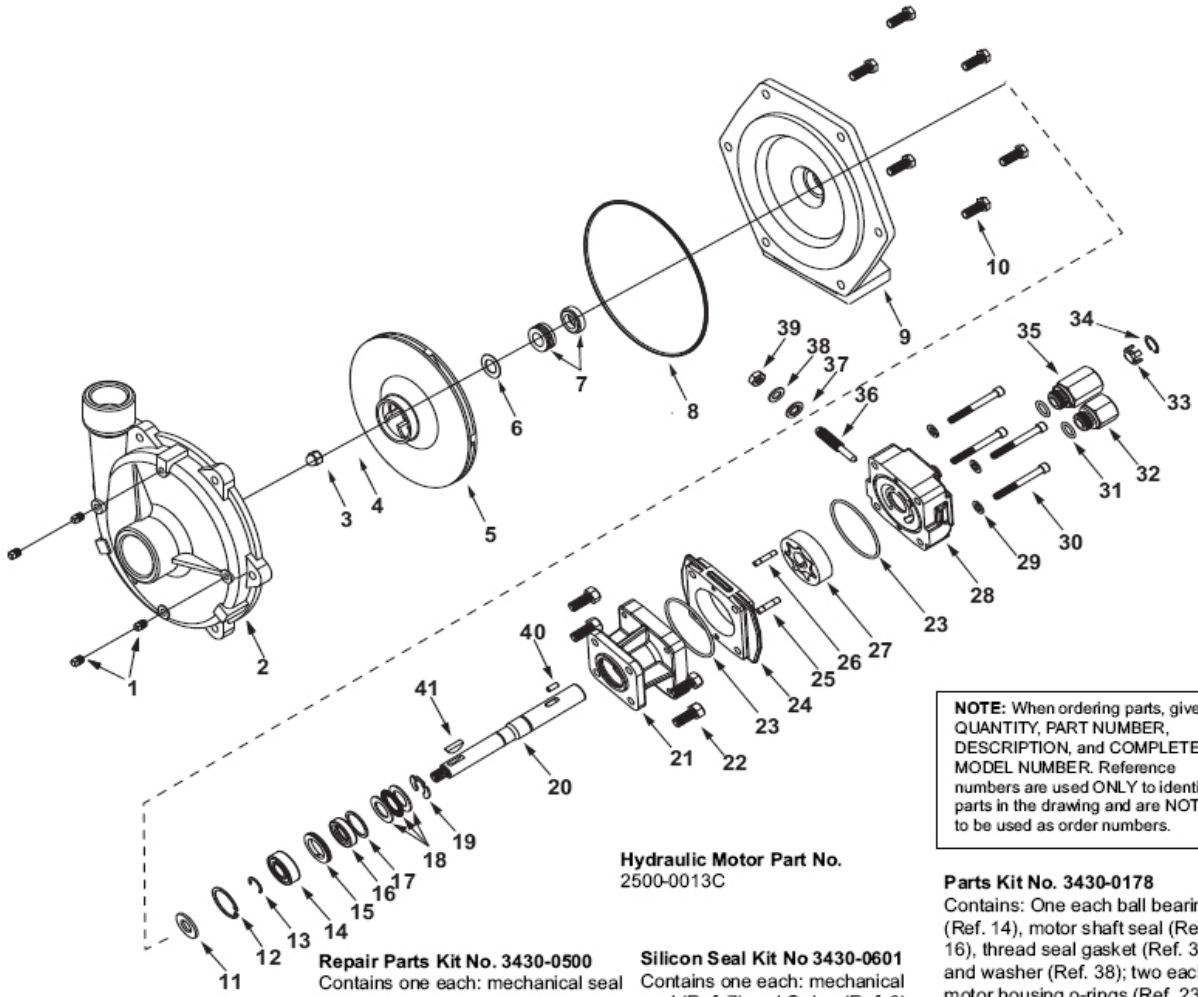

NOTE: When ordering parts, give QUANTITY, PART NUMBER, DESCRIPTION, and COMPLETE MODEL NUMBER. Reference numbers are used ONLY to identify parts in the drawing and are NOT to be used as order numbers.

Hydraulic Motor Part No.
2500-0013C

Parts Kit No. 3430-0178
Contains: One each ball bearing (Ref. 14), motor shaft seal (Ref. 16), thread seal gasket (Ref. 37), and washer (Ref. 38); two each motor housing o-rings (Ref. 23), and port adapter o-rings (Ref. 31).

Repair Parts Kit No. 3430-0500
Contains one each: mechanical seal (Ref. 7), o-ring (Ref. 8), and rubber gasket (Ref. 6).

Silicon Seal Kit No 3430-0601
Contains one each: mechanical seal (Ref. 7) and O-ring (Ref. 8).

Ref. No.	Qty. Req'd.	Part No.	Description
1	1	2406-0007	Drain/Vent Plug
2	1	0152-9200C	Pump Casing
3	1	2253-0002	Impeller Nut
4	1	2270-0071	Washer
5	1	0403-9200P1	Impeller
6	1	1700-0100	Rubber Gasket
7	1	2120-0009	Mechanical Seal (standard Viton)
7	1	3430-0601	Mechanical Seal (Silicon Carbide)(Optional)
8	1	1720-0180	O-ring
9	1	0752-9200C	Mounting Flange
10	6	2210-0086	Hex Head Cap Screw
11	1	1410-0056	Slinger Ring
12	1	1820-0013	Retaining Ring
13	1	1810-0014	Snap Ring
14	1	2000-0010	Ball Bearing
15	1	1410-0073	Spacer
16	1	2104-0005	Shaft Seal
17	1	1410-0074	Seal Spacer
18	1	2029-0014	Thrust Bearing Assembly - Consists of: (1) Thrust Bearing & (2) Thrust Brg. Races
19	1	1810-0026	Snap Ring
20	1	0514-2500	Shaft

Ref. No.	Qty. Req'd.	Part No.	Description
21	1	0151-2500C	Motor Body (Includes Main Bearing)
22	4	2210-0005	Hex Head Cap Screw
23	2	1720-0110	O-ring
24	1	0702-2500C1	Gerotor Housing 1" wide
25	1	1600-0052	Dowel Pin
26	1	1600-0068	Dowel Pin
27	1	3900-0024	Gerotor
28	1	0251-2500C2	Motor End Plate (Includes Main Bearing)
29	1	2270-0027	Washer
30	4	2220-0044	Cap Screw
31	2	1720-0108	O-ring
32	1	3360-0021	Pressure Port Adapter
33	1	3260-0068	Poppet
34	1	1820-0038	Retaining Ring
35	1	3320-0049	Tank Port Adapter
36	1	3220-0029	Bypass Adjusting Screw
37	1	1700-0047	Gasket
38	4	2270-0039	Washer
39	1	2250-0038	Lock Nut
40	1	1610-0055	Roll Pin
41	1	1610-0053	Key

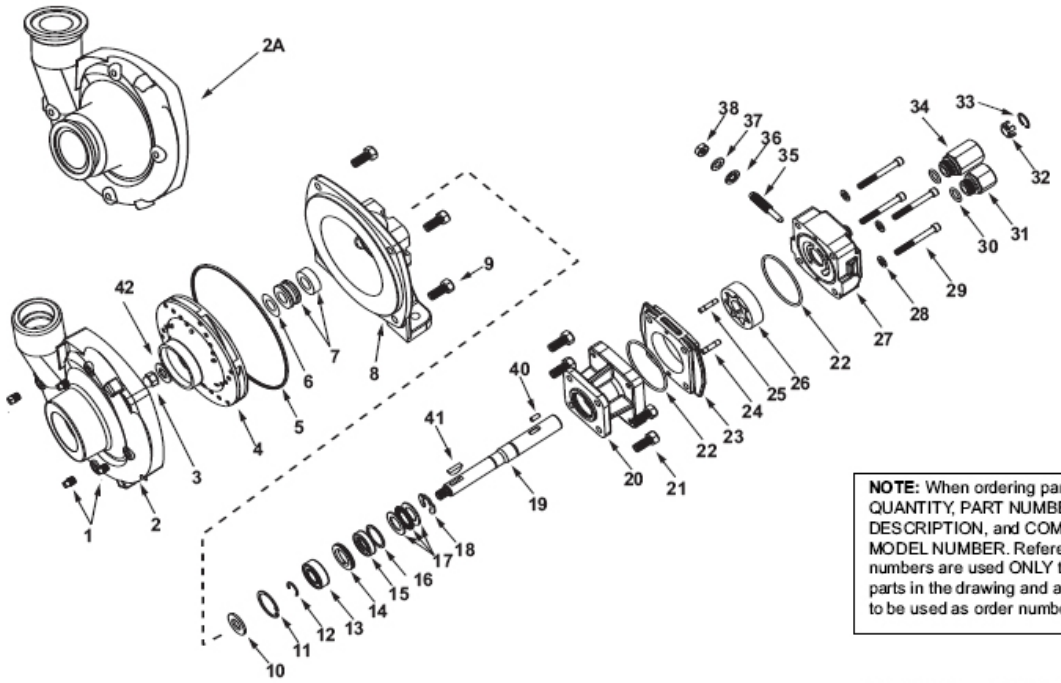

NOTE: When ordering parts, give QUANTITY, PART NUMBER, DESCRIPTION, and COMPLETE MODEL NUMBER. Reference numbers are used ONLY to identify parts in the drawing and are NOT to be used as order numbers.

Repair Parts Kit No. 3430-0332
Contains: One mechanical seal (Ref. 7), one o-ring (Ref. 5) and one rubber gasket (Ref. 6).

Silicon Carbide Seal Kit No. 3430-0589
Contains one each: mechanical seal (Ref. 7) and o-ring (Ref. 5).

Hydraulic Motor Part Nos.
2500-0009C (HM1C Models)
2500-0011C (HM3C Models)
2500-0018C (HM5C Models)

Parts Kit No. 3430-0178
Contains: One each ball bearing (Ref. 13), motor shaft seal (Ref. 15), thread seal gasket (Ref. 36), and washer (Ref. 37); two each motor housing o-rings (Ref. 22), and port adapter o-rings (Ref. 30).

Ref. No.	Qty. Req'd.	Part No.	Description
1	4	2406-0007	Drain/Vent Plug
2	1	0154-9200C1	Pump Casing (Volute) (Includes a stainless steel wear ring)
2A	1	0157-9200C	Pump Casing (Universal Flange)
3	1	2253-0002	Impeller Nut
4	1	0401-9200P2	Impeller
5	1	1720-0083	O-ring
6	1	1700-0100	Rubber Gasket
7	1	2120-0009	Mechanical Seal (Viton)
7	1	3430-0589	Mechanical Seal (Silicon Carbide) (Optional)
8	1	0750-9300C	Mounting Flange
9	4	2210-0020	Hex Head Cap Screw
10	1	1410-0056	Slinger Ring
11	1	1820-0013	Retaining Ring
12	1	1810-0014	Snap Ring
13	1	2000-0010	Ball Bearing
14	1	1410-0073	Spacer
15	1	2104-0005	Shaft Seal
16	1	1410-0074	Seal Spacer
17	1	2029-0014	Thrust Bearing Assembly - Consists of: (1) Thrust Bearing & (2) Thrust Brg. Races
18	1	1810-0026	Snap Ring
19	1	0510-2500	Shaft (HM3C Model) 7-1/2" long
19	1	0511-2501	Shaft (HM1C & HM5C Models) 7" long
20	1	0151-2500C	Motor Body (Includes Main Bearing)
21	4	2210-0005	Hex Head Cap Screw
22	2	1720-0110	O-ring
23	1	0700-2500C1	Gerotor Housing (HM1C Model) 1/2" wide

Ref. No.	Qty. Req'd.	Part No.	Description
23	1	0702-2500C1	Gerotor Housing (HM3C Model) 1" wide
23	1	0704-2500C1	Gerotor Housing (HM5C Model) 5/8" wide
24	1	1600-0052	Dowel Pin (HM3C Models)
24	1	1600-0044	Dowel Pin (HM1C and HM5C Models)
25	1	1600-0068	Dowel Pin (HM3C Model)
25	1	1600-0037	Dowel Pin (HM1C and HM5C Models)
26	1	3900-0022	Gerotor (HM1C Model)
26	1	3900-0024	Gerotor (HM3C Model)
26	1	3900-0048	Gerotor (HM5C Model)
27	1	0251-2500C2	Motor End Plate (Includes Main Bearing)
28	4	2270-0039	Washer
29	4	2220-0044	Cap Screw (HM3C)
29	4	2220-0021	Cap Screw (HM1C)
29	4	2220-0032	Cap Screw (HM5C)
30	2	1720-0108	O-ring
31	1	3360-0021	Pressure Port Adapter
32	1	3260-0068	Poppet
33	1	1820-0038	Retaining Ring
34	1	3320-0049	Tank Port Adapter
35	1	3220-0029	Bypass Adjusting Screw
36	1	1700-0047	Gasket
37	1	2270-0027	Washer
38	1	2250-0038	Lock Nut
40	1	1610-0055	Roll Pin (HM3C Models)
40	1	1610-0031	Roll Pin (HM1C and HM5C Models)
41	1	1610-0012	Woodruff Key
42	1	2270-0071	Washer

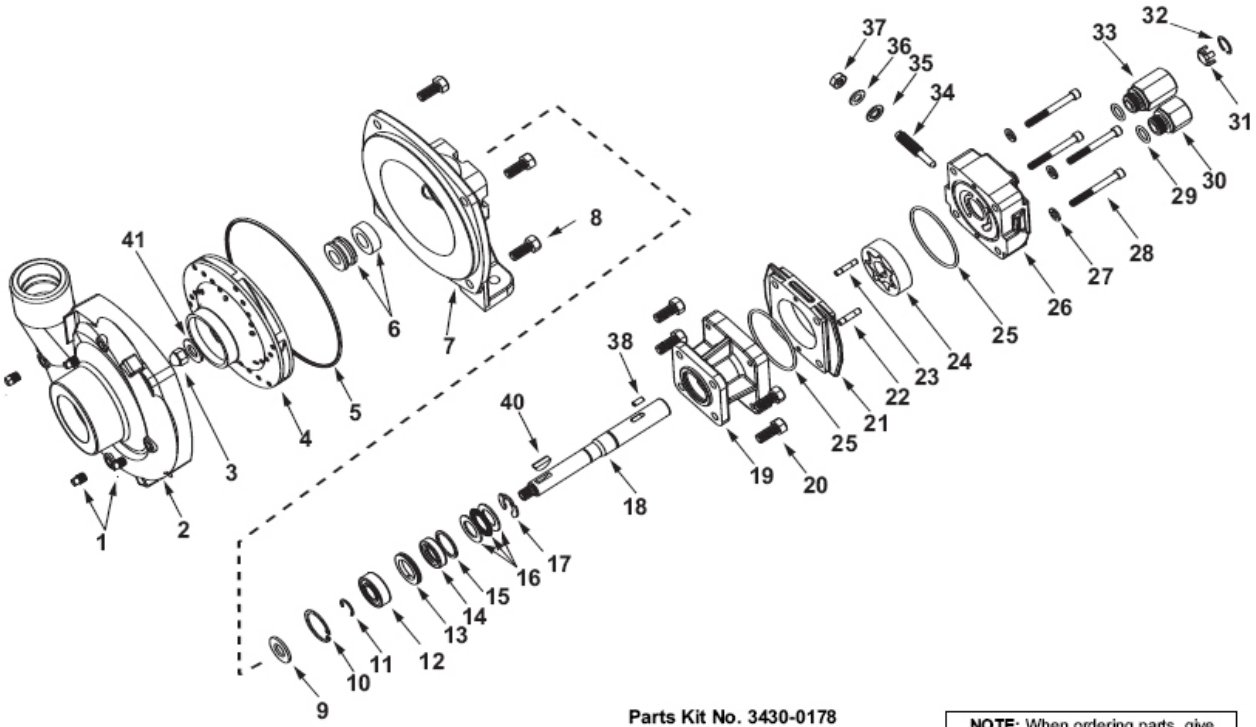

Silicon Carbide Seal Kit No. 3430-0589
Contains one each: mechanical seal (Ref. 5) and o-ring (Ref. 6).

Hydraulic Motor Part Nos.
2500-0009C (HM1C Models)
2500-0011C (HM3C Models)
2500-0018C (HM5C Models)

Parts Kit No. 3430-0178
Contains: One each ball bearing (Ref. 12), motor shaft seal (Ref. 14), thread seal gasket (Ref. 35), and washer (Ref. 36); two each motor housing o-rings (Ref. 25), and port adapter o-rings (Ref. 29).

NOTE: When ordering parts, give QUANTITY, PART NUMBER, DESCRIPTION, and COMPLETE MODEL NUMBER. Reference numbers are used ONLY to identify parts in the drawing and are NOT to be used as order numbers.

Ref. No.	Qty. Req'd.	Part No.	Description
1	4	2406-0016	Drain/Vent Plug
2	1	0154-9200S1	Pump Casing (Volute)
3	1	2253-0006	Impeller Nut
4	1	0405-9200P2	Impeller
5	1	1720-0083	O-ring
6	1	3430-0589	Mechanical Seal (Silicon Carbide)
7	1	0750-9300C	Mounting Flange
8	4	2210-0125	Hex Head Cap Screw
9	1	1410-0056	Slinger Ring
10	1	1820-0013	Retaining Ring
11	1	1810-0014	Snap Ring
12	1	2000-0010	Ball Bearing
13	1	1410-0073	Spacer
14	1	2104-0005	Shaft Seal
15	1	1410-0074	Seal Spacer
16	1	2029-0014	Thrust Bearing Assembly - Consists of: (1) Thrust Bearing & (2) Thrust Brg. Races
17	1	1810-0026	Snap Ring
18	1	0510-2500	Shaft (HM3C Model) 7-1/2" long
18	1	0511-2501	Shaft (HM1C & HM5C Models) 7" long
19	1	0151-2500C	Motor Body (Includes Main Bearing)
20	4	2210-0005	Hex Head Cap Screw
21	1	0700-2500C1	Gerotor Housing (HM1C Model) 1/2" wide
21	1	0702-2500C1	Gerotor Housing (HM3C Model) 1" wide
21	1	0704-2500C1	Gerotor Housing (HM5C Model) 5/8" wide

Ref. No.	Qty. Req'd.	Part No.	Description
22	1	1600-0052	Dowel Pin (HM3C Models)
22	1	1600-0044	Dowel Pin (HM1C and HM5C Models)
23	1	1600-0068	Dowel Pin (HM3C Model)
23	1	1600-0037	Dowel Pin (HM1C and HM5C Models)
24	1	3900-0022	Gerotor (HM1C Model)
24	1	3900-0024	Gerotor (HM3C Model)
24	1	3900-0048	Gerotor (HM5C Model)
25	2	1720-0110	O-ring
26	1	0251-2500C2	Motor End Plate (Includes Main Bearing)
27	4	2270-0039	Washer
28	4	2220-0044	Cap Screw (HM3C)
28	4	2220-0021	Cap Screw (HM1C)
28	4	2220-0032	Cap Screw (HM5C)
29	2	1720-0108	O-ring
30	1	3360-0021	Pressure Port Adapter
31	1	3260-0068	Poppet
32	1	1820-0038	Retaining Ring
33	1	3320-0049	Tank Port Adapter
34	1	3220-0029	Bypass Adjusting Screw
35	1	1700-0047	Gasket
36	1	2270-0027	Washer
37	1	2250-0038	Lock Nu
38	1	1610-0031	Roll Pin (HM1C and HM5C Models)
38	1	1610-0055	Roll Pin (HM3C Models)
40	1	04432	Woodruff Key (Stainless)
41	1	2270-0071	Washer

Limited Warranty on Hypro Pumps and Other Hypro Products

Hypro warrants to the original purchaser of its products (the "Purchaser") that such products will be free from defects in material and workmanship under normal use for the period of one (1) year for all products except: oil crankcase plunger pumps will be free from defects in material and workmanship under normal use for the period of five (5) years, and accessories will be free from defects in material and workmanship under normal use for the period of ninety (90) days. In addition, Hypro warrants to the purchaser all forged brass pump manifolds will be free from defects in material and workmanship under normal use and from damage resulting from environmental conditions for the life of the pump.

"Normal use" does not include use in excess of recommended maximum speeds, pressures, vacuums and temperatures, or use requiring handling of fluids not compatible with component materials, as noted in Hypro product catalogs, technical literature, and instructions. This warranty does not cover freight damage, freezing damage, normal wear and tear, or damage caused by misapplication, fault, negligence, alterations, or repair that affects the performance or reliability of the product.

THIS WARRANTY IS EXCLUSIVE. HYPRO MAKES NO OTHER WARRANTY, EXPRESS OR IMPLIED, INCLUDING BUT NOT LIMITED TO ANY WARRANTY OF MERCHANTABILITY OR FITNESS FOR A PARTICULAR PURPOSE.

Hypro's obligation under this warranty is, at Hypro's option, to either repair or replace the product upon return of the entire product to the Hypro factory in accordance with the return procedures set forth below. **THIS IS THE EXCLUSIVE REMEDY FOR ANY BREACH OF WARRANTY.**

IN NO EVENT SHALL HYPRO BE LIABLE FOR ANY INCIDENTAL OR CONSEQUENTIAL DAMAGES OF ANY KIND, WHETHER FOR BREACH OF ANY WARRANTY, FOR NEGLIGENCE, ON THE BASIS OF STRICT LIABILITY, OR OTHERWISE.

Return Procedures

All pumps or products must be flushed of any chemical (ref. OSHA Section 0910.1200 (d)(e)(f)(g)(h)) and hazardous chemicals must be labeled before being shipped* to Hypro for service or warranty consideration. Hypro reserves the right to request a Material Safety Data sheet from the Purchaser for any pump or product Hypro deems necessary. Hypro reserves the right to "disposition as scrap" pumps or products returned which contain unknown substances, or to charge for any and all costs incurred for chemical testing and proper disposal of components containing unknown substances. Hypro requests this in order to protect the environment and personnel from the hazards of handling unknown substances.

For technical or application assistance, call the **Hypro Technical/Application number: 1-800-445-8360.**
To obtain service or warranty assistance, call the Hypro Service and Warranty number: 1-800-468-3428;
or call the Hypro Service and Warranty FAX: (651) 766-6618.
Be prepared to give Hypro full details of the problem, including the following information:

1. Model number and the date and from whom you purchased your pump.
2. A brief description of the pump problem, including the following:
   - Liquid pumped. State the pH and any non-soluble materials, and give the generic or trade name.
   - Temperature of the liquid and ambient environment.
   - Suction lift or vacuum (measured at the pump).
   - Discharge pressure.
   - Size, type, and mesh of the suction strainer.
   - Drive type (gas engine/electric motor; direct/belt drive; tractor PTO) and rpm of pump.
   - Viscosity (of oil, or other than water weight liquid).
   - Elevation from the pump to the discharge point.
   - Size and material of suction and discharge line.
   - Type of spray gun, orifice size, unloader/relief valve.

Hypro may request additional information, and may require a sketch to illustrate the problem. Contact the factory to receive a return material authorization before sending the product. All pumps returned for warranty work should be sent shipping charges prepaid to:

HYPRO
Attention: Service Department
375 Fifth Avenue NW
New Brighton, Minnesota 55112

* Carriers, including U.S.P.S., airlines, UPS, ground freight, etc., require specific identification of any hazardous materials being shipped. Failure to do so may result in a substantial fine and/or prison term. Check with your shipping company for specific instructions.

Note: This warranty does not apply to Hypro Pump Kit Model 1538, 1551, 1538-SP and 1551-SP. This is because the user could incorrectly assemble the parts and cause the pump to work improperly.

HYPRO®
Pentair Water
SPRAY GROUP
375 Fifth Avenue NW • New Brighton, MN 55112
Phone: (651) 766-6300 • 800-424-9776 • Fax: 800-323-6496
www.hypropumps.com

Hypro 2006
Printed in USA

Operating Instruction

AT7000	Task	Procedures	Illustrations
▶	**Bottom fill valve operation**	**1. Close pump valve before filling.** **2. Open 3” ball valve at the bottom of tank.** **3. After tank is filled close rear 3” ball valve.**	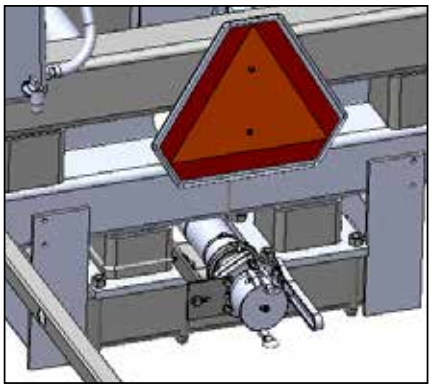
			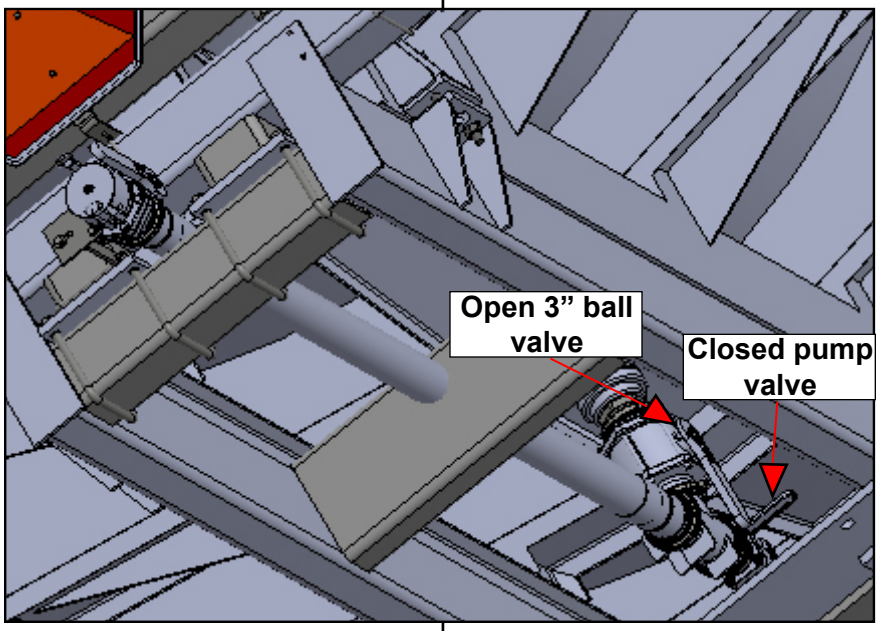
▶	***NOTE:*** **Do not engage pump until valve is opened.**		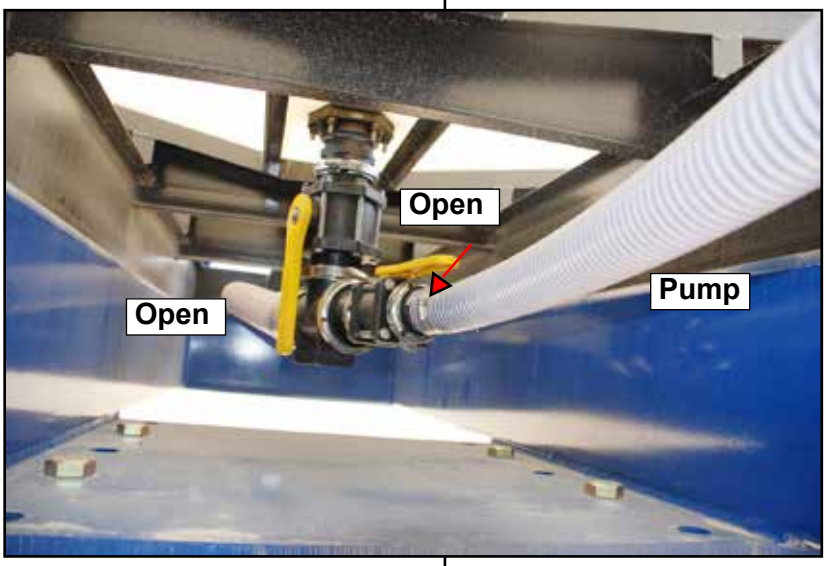
		4. Before engaging pump open pump valve.	

Task	Procedures	Illustrations
► **Throttling valve**	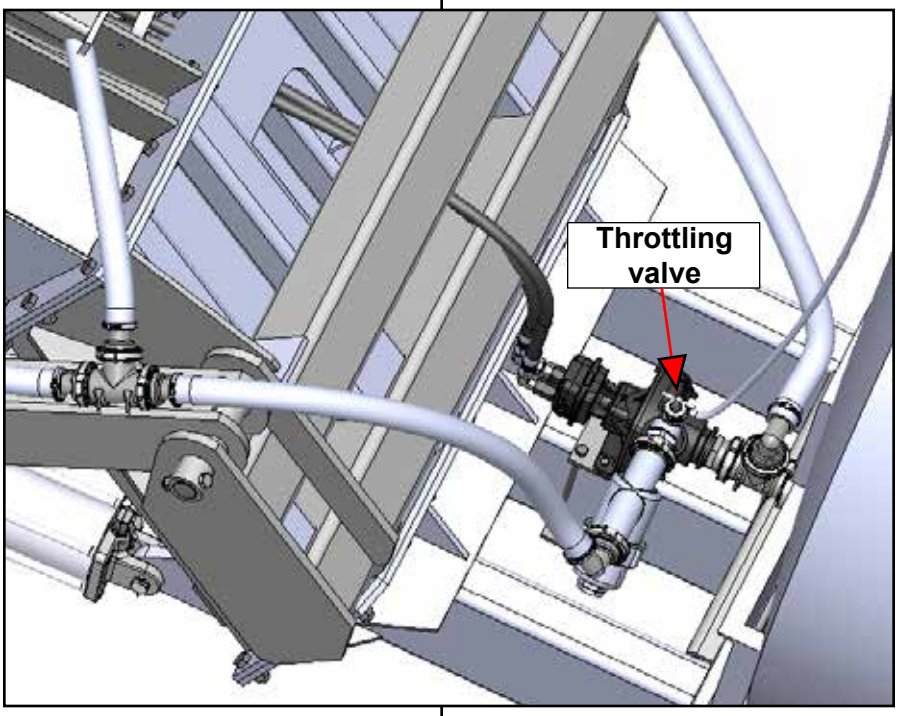	
	5. Turn throttling valve to the left to open completely.	
► **Bottom fill plumbing screen**	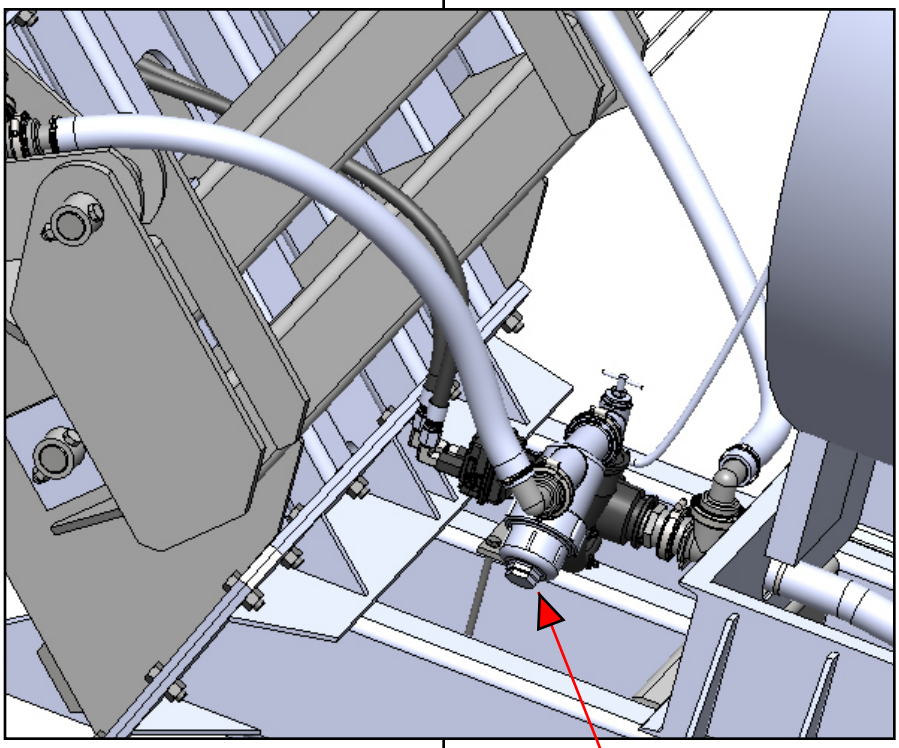	
	6. Screen should be checked and cleaned periodically.	

Operating Instruction

AT7000	Task	Procedures	Illustrations
►	**Safety water tank operation and maintenance**	**1. Location of nine-gallon safety water tank/tool box. Change water daily to provide fresh clean water to flush exposed skin or eyes. Drain water daily in cold temperatures to prevent freezing and bursting tank.** **2. In case of exposure to fertilizer, open faucet or pull top end of hose loose to flush exposed part of body. Remove contaminated clothes as soon as possible.**	

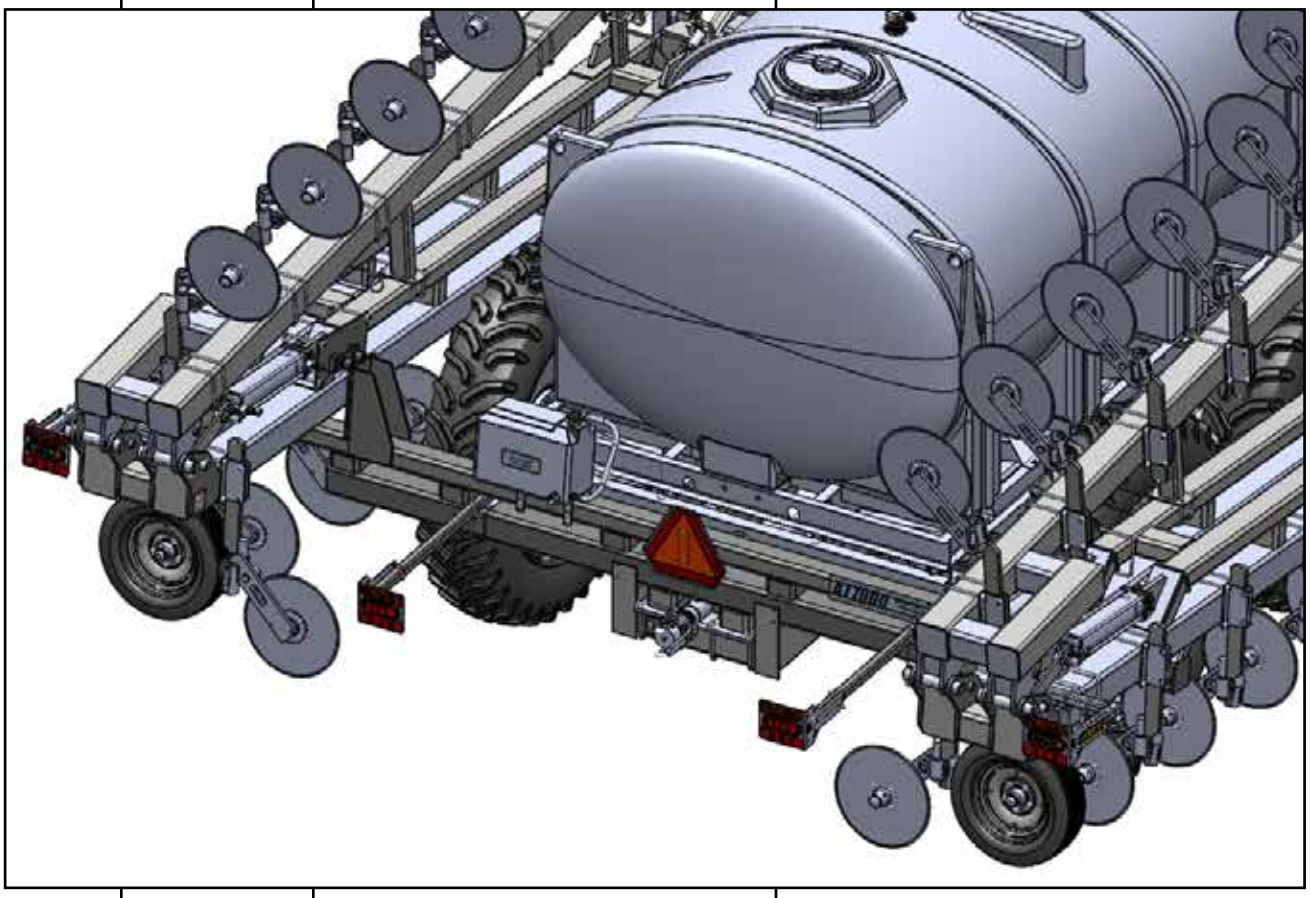

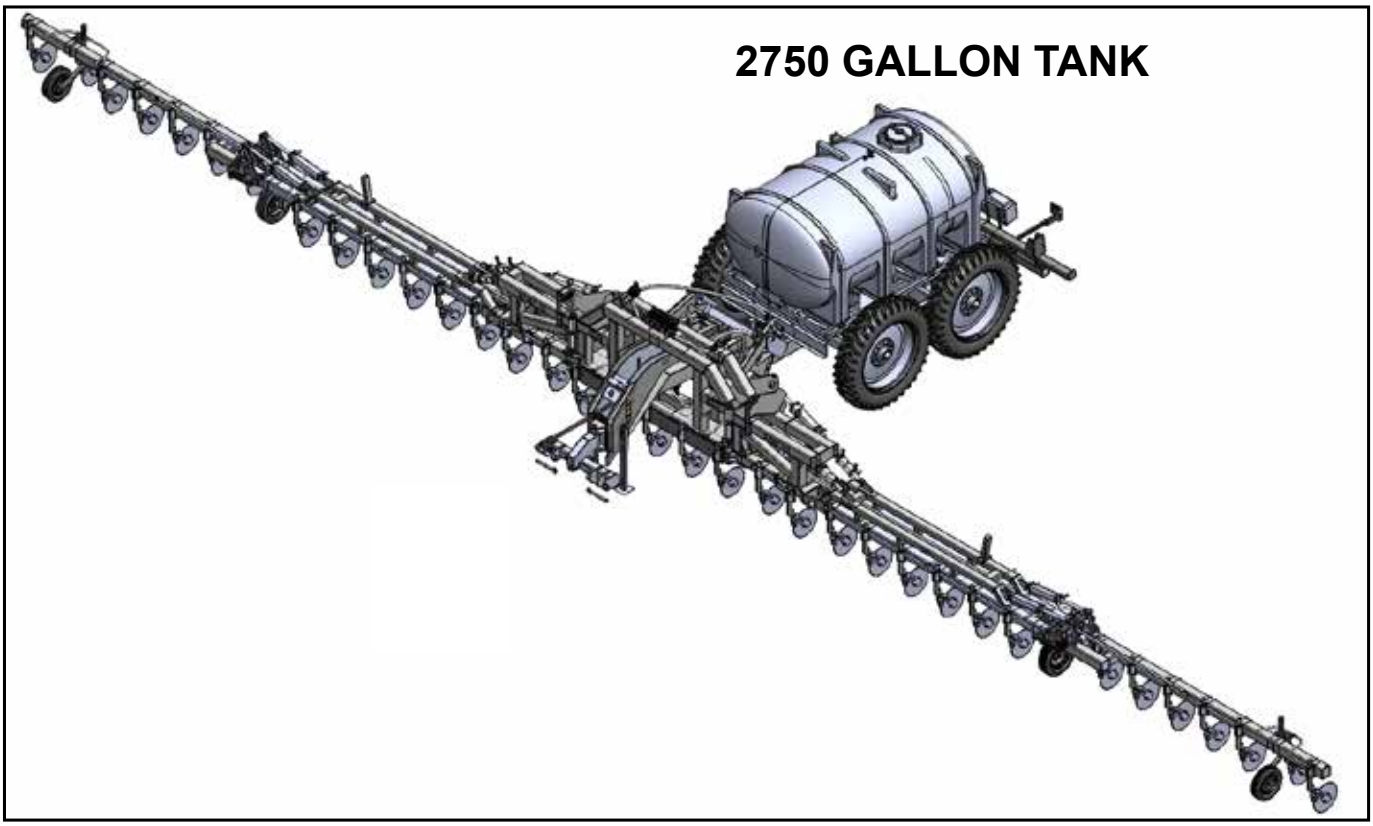
2750 GALLON TANK

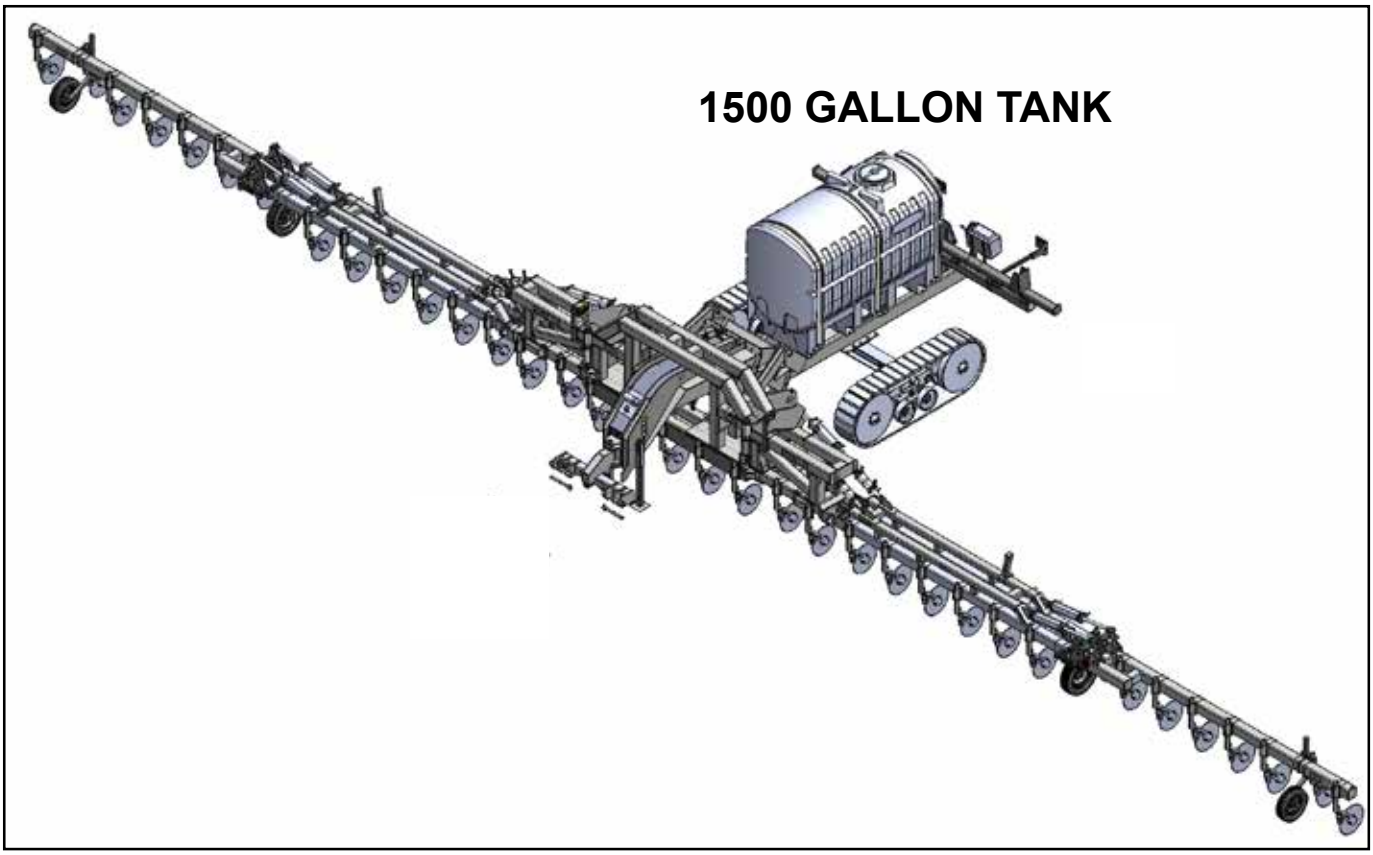
1500 GALLON TANK

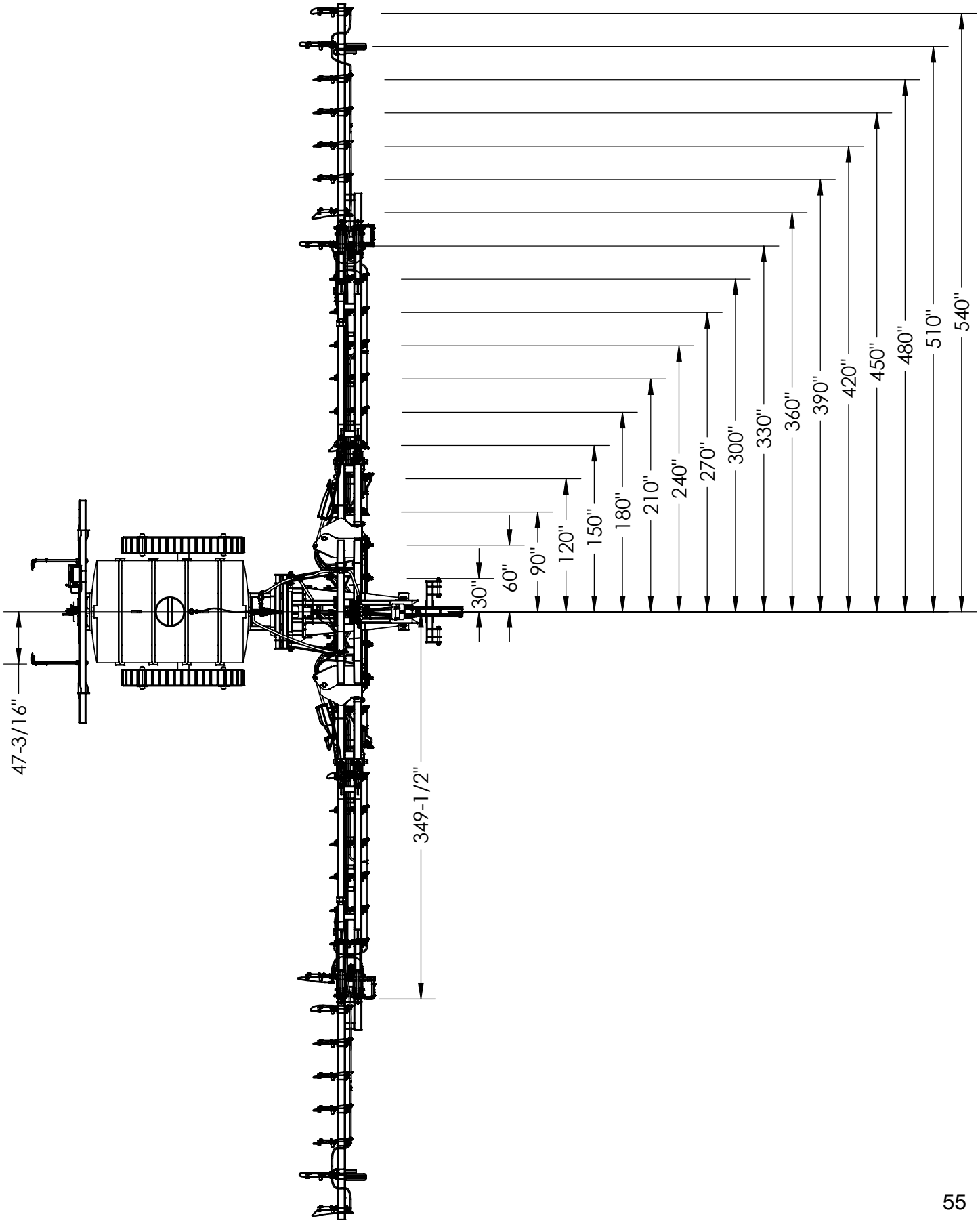
47-3/16"
349-1/2"
30"
60"
90"
120"
150"
180"
210"
240"
270"
300"
330"
360"
390"
420"
450"
480"
510"
540"

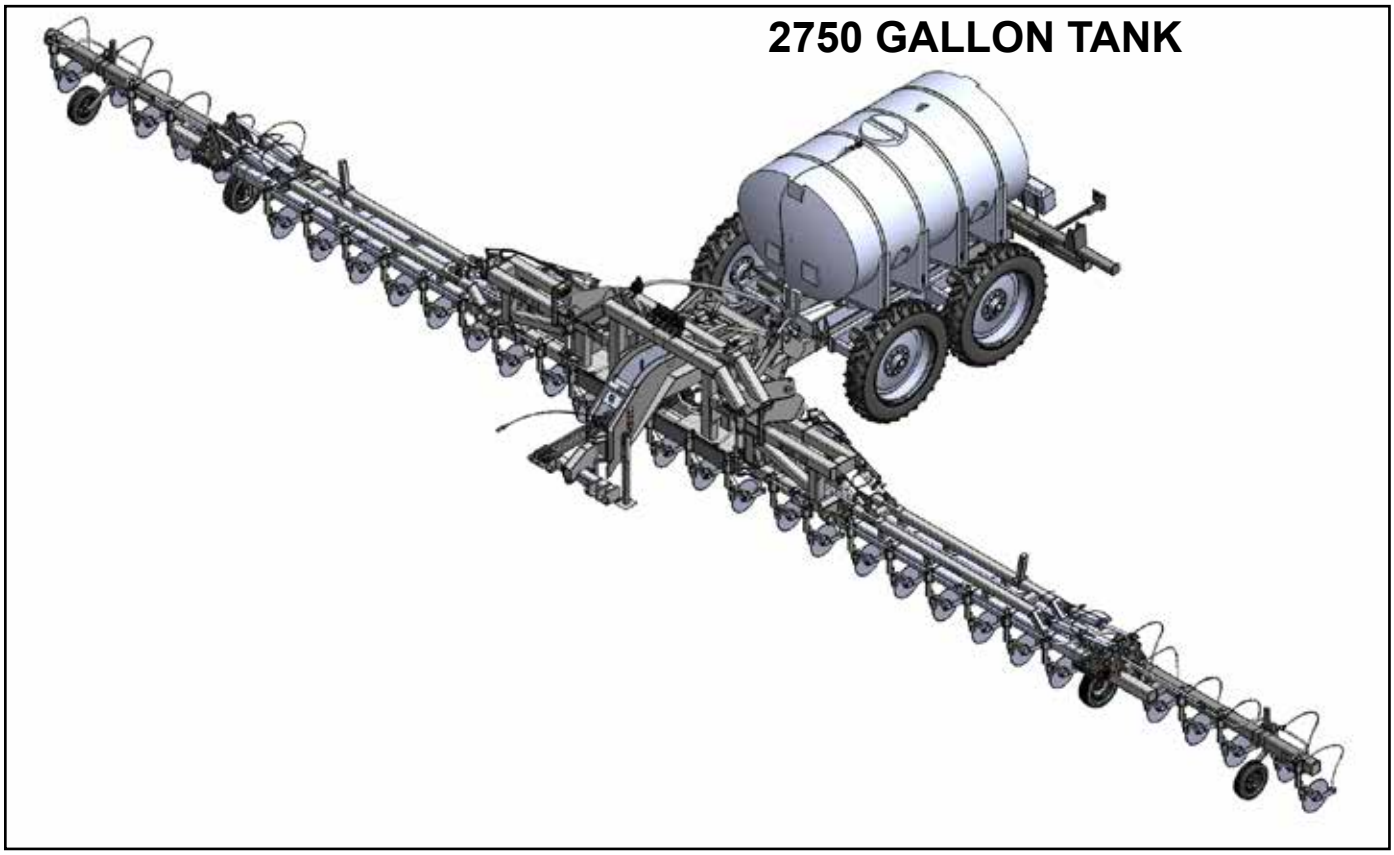
2750 GALLON TANK

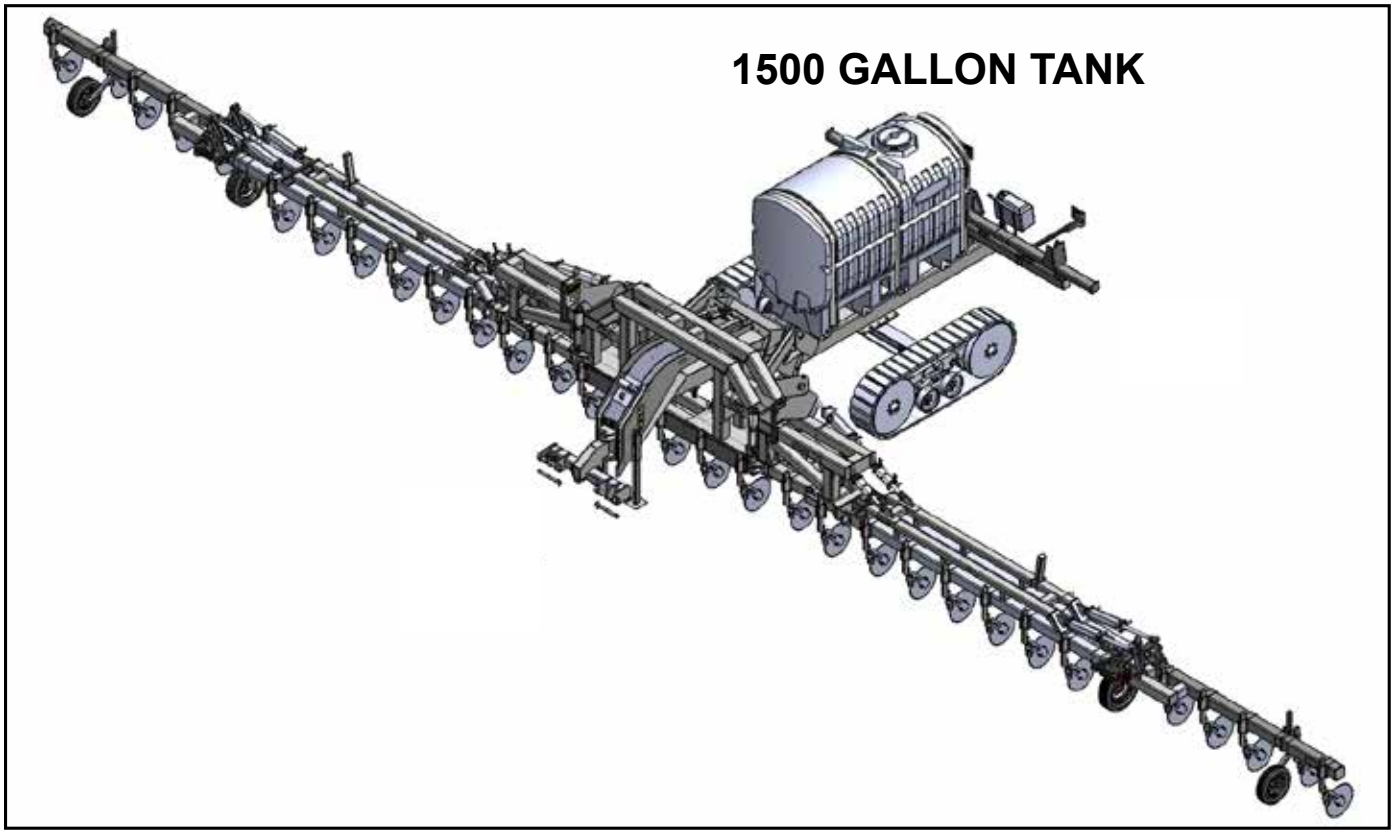
1500 GALLON TANK

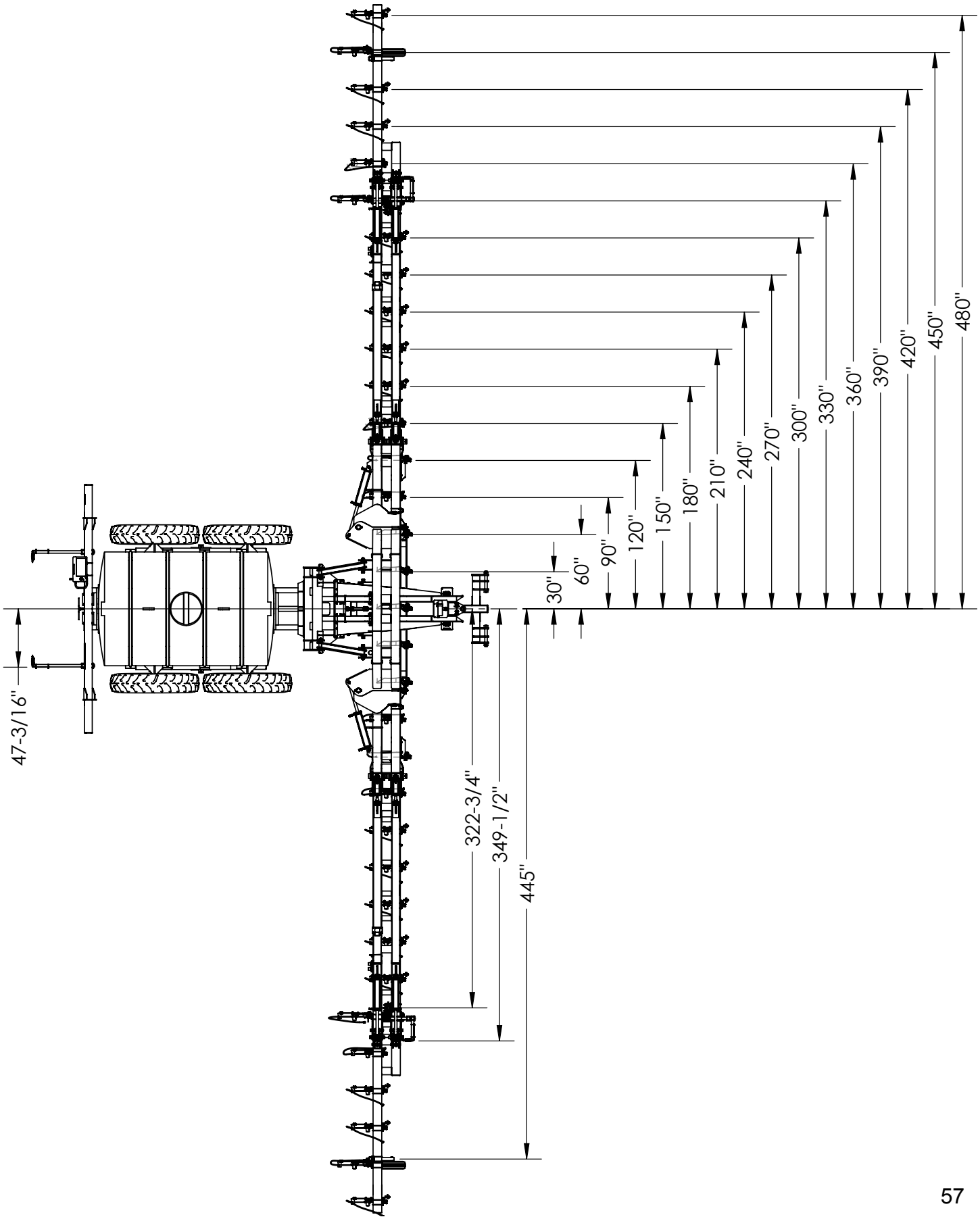
30"
60"
90"
120"
150"
180"
210"
240"
270"
300"
330"
360"
390"
420"
450"
480"
47-3/16"
322-3/4"
349-1/2"
445"

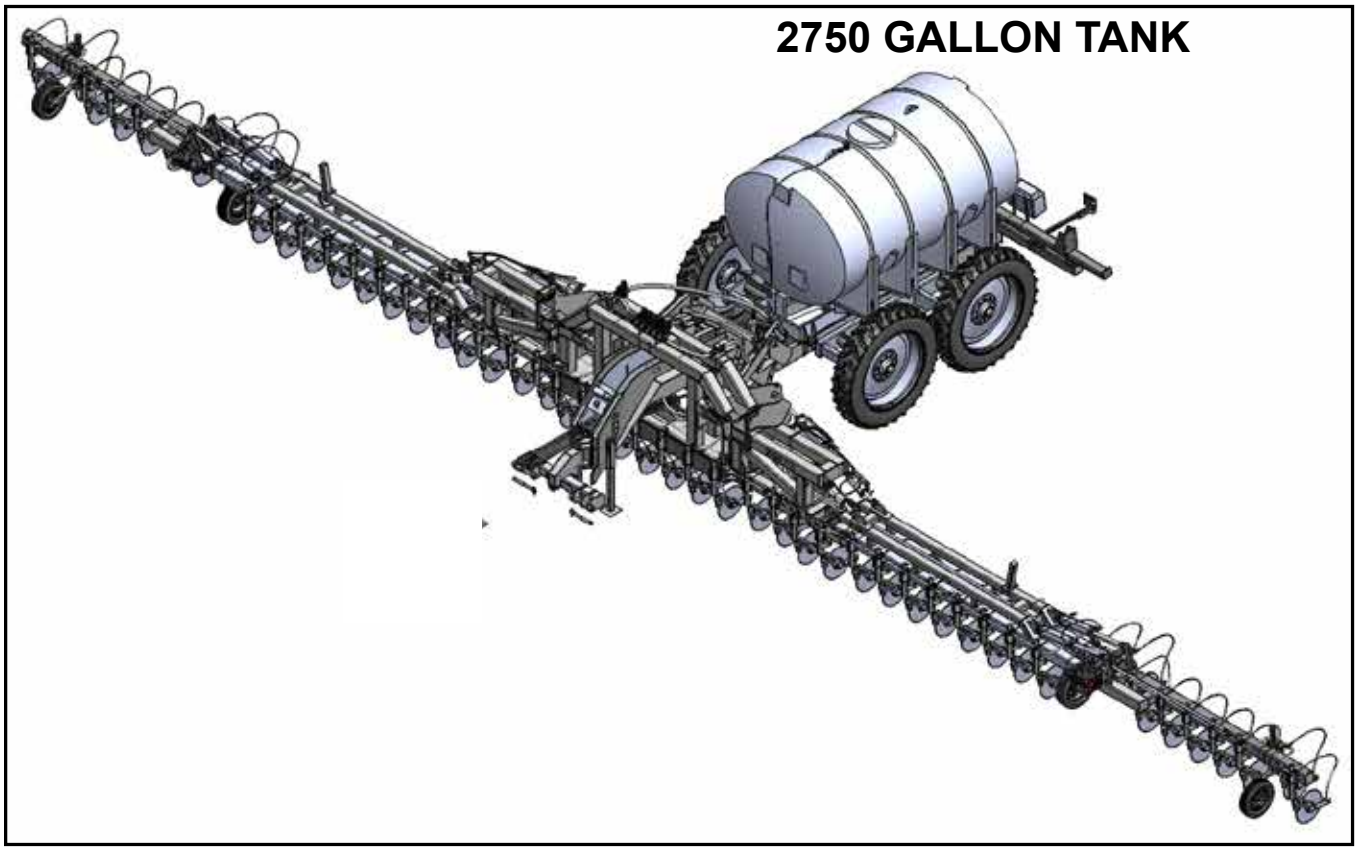
2750 GALLON TANK

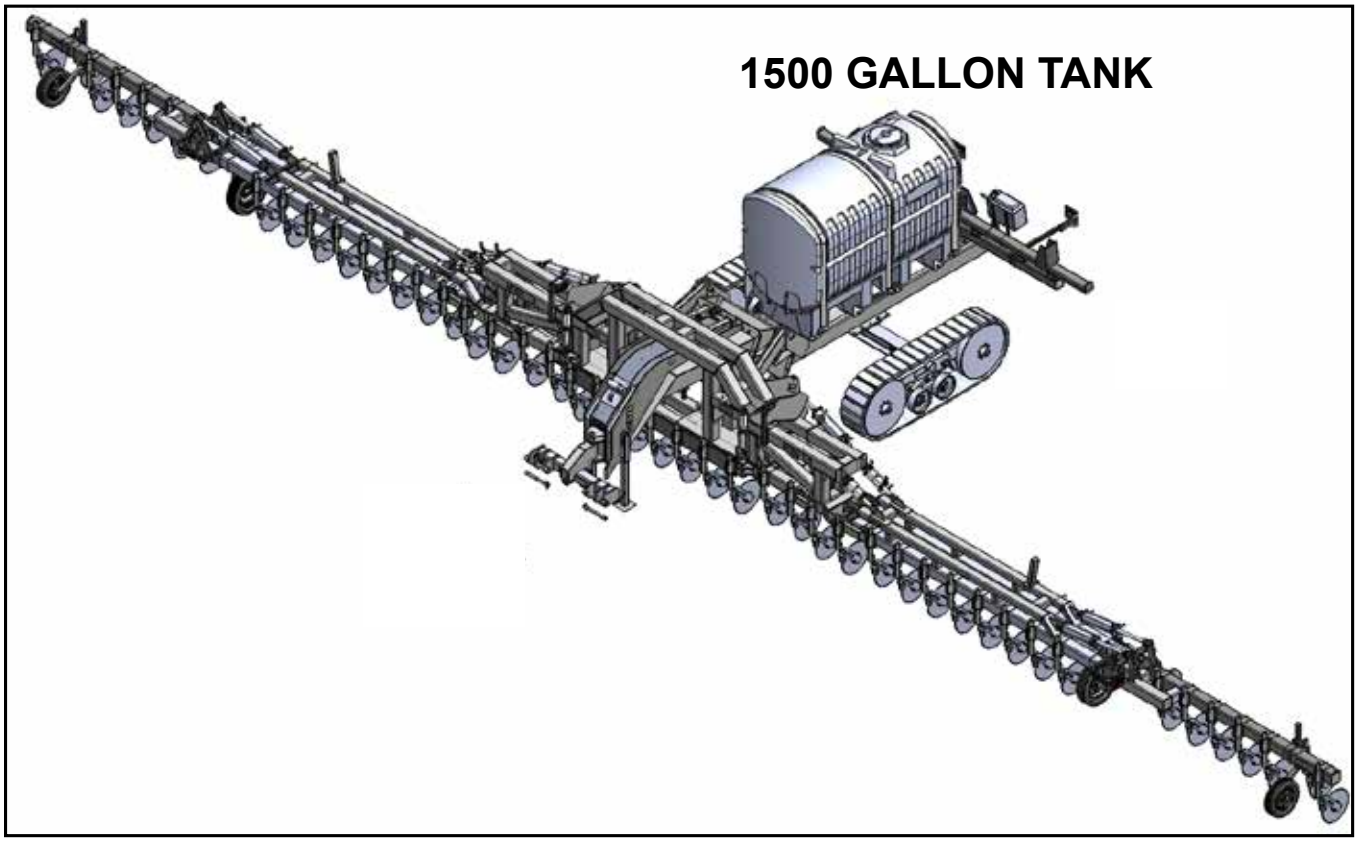
1500 GALLON TANK

AT7000 77004920 49 Row 20”

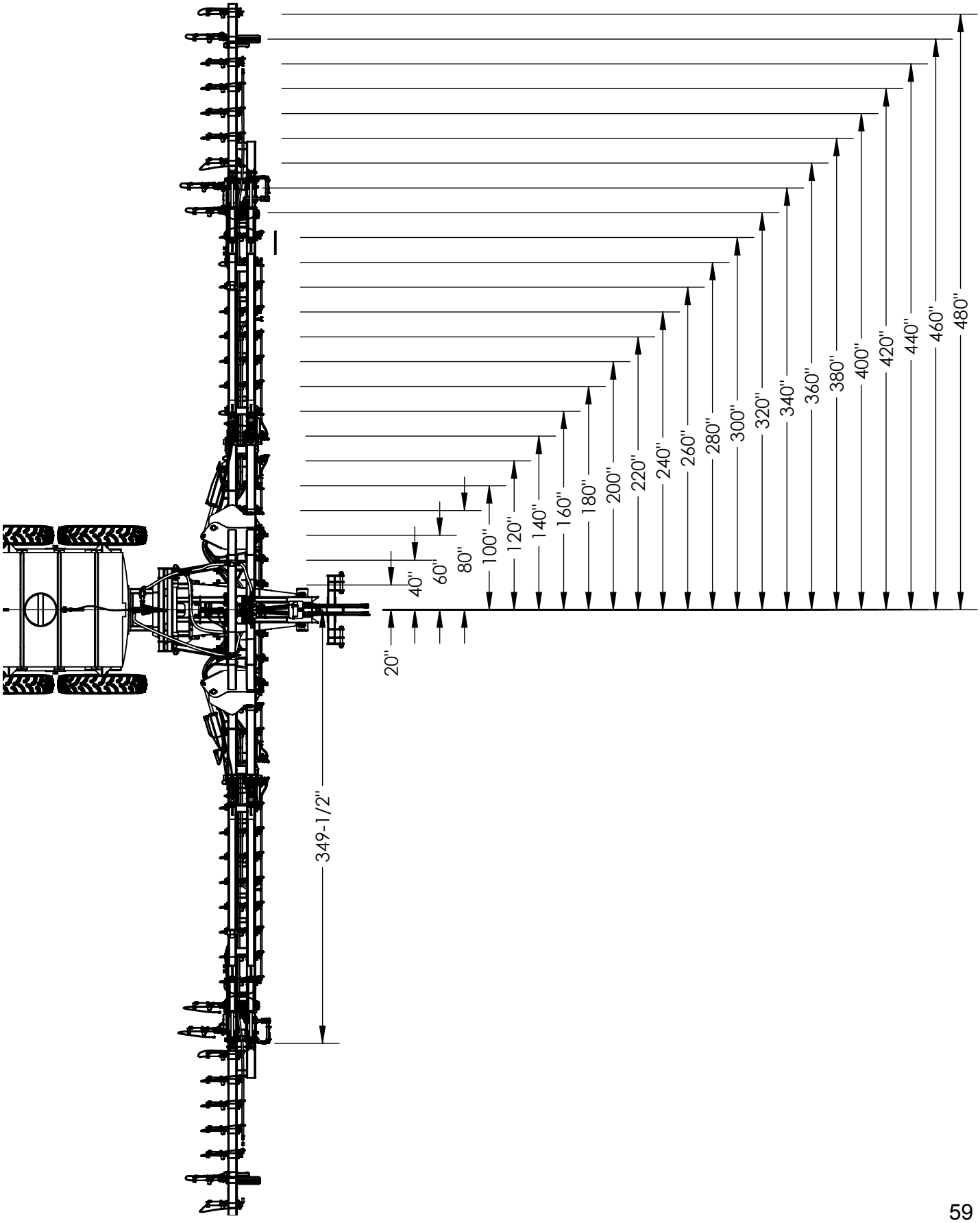

AT7000 Cart Frame (77000103)

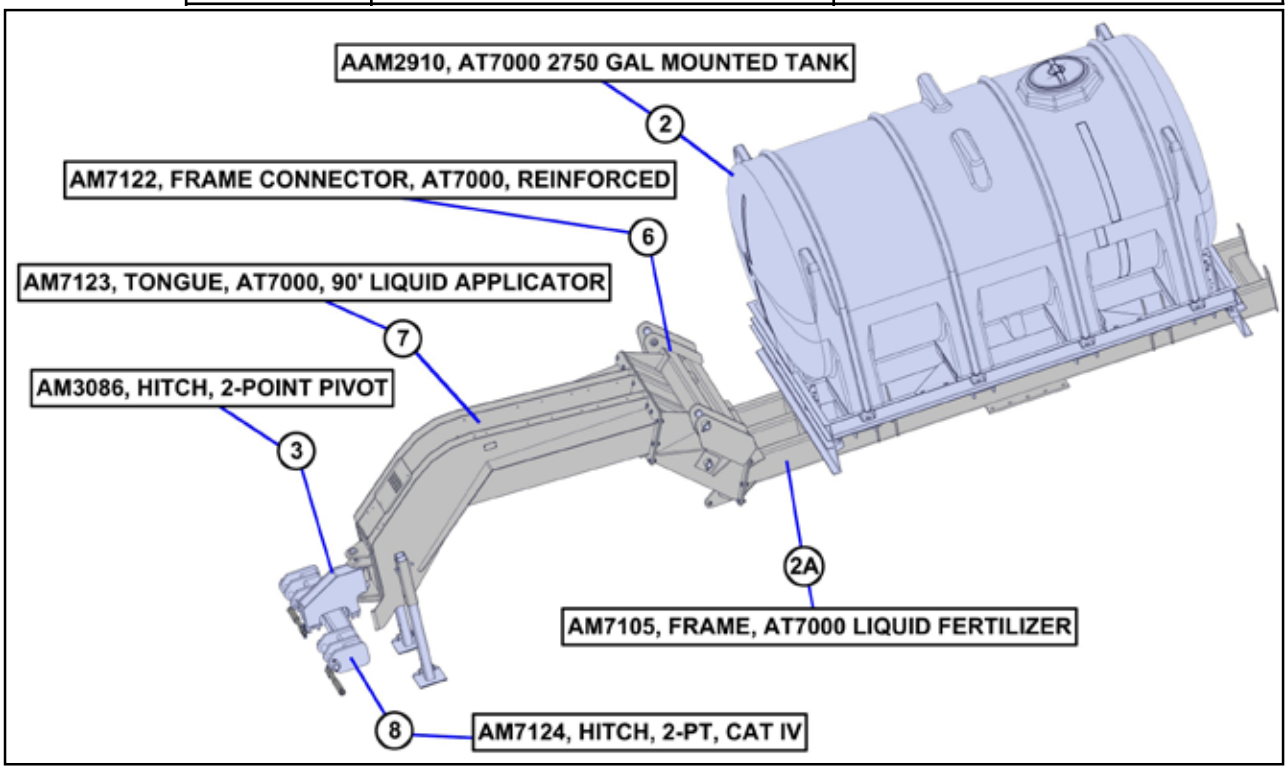

BOM ID	Qty	Item No	Description
1	1	77000103	AT7000, CART FRAME, HD, 2750 GAL TANK
2	1	AAM2910	AT7000 2750 GAL MOUNTED TANK
2A	1	AM7105	FRAME, AT7000 LIQUID FERTILIZER
2B	1	AM7156	TANK MOUNT, 2750 GAL
2C	1	AP3200	TANK, 2750 GAL, ELLIPTICAL LEG, FM2750-88C
2D	4	AP3201	HOOPS, 2750 GAL ELLIPTICAL LEG, FS2750-HP
2E	1	AP3202	TANK SKID, 2750 GAL ELLIPTICAL LEG
2F	12	BP3050	WASHER, FLAT, 1/2", PLTD
2G	12	BP3126	HEX CAP SCREW, 1/2"-13 X 1-1/2", GRD 5, PLTD
2H	4	BP3142	HEX CAP SCREW, 3/4"-10 X 3-1/2", GRD 5, PLTD
2I	12	BP3442	NUT, HEX LOCK, 3/4"-10, TOP LOCK, GRD C, PLTD
2J	8	BP3608	HEX CAP SCREW, 3/4"-10 X 4", GRD 8, PLTD
2K	12	BP3628	NUT, HEX, 1/2"-13, TOP LOCK
3	1	AM3086	HITCH, 2-POINT PIVOT
3A	2	AP3136	BUSHING, SELF-LUBRICATED, 2 ID X 2-3/4 LONG
4	2	AM3139	BUSHING, CAT III CONVERSION, 1-1/2" ID X 2-3/4" OAL
5	2	AM4682	PARK STAND
6	1	AM7122	FRAME CONNECTOR, AT7000, REINFORCED
7	1	AM7123	TONGUE, AT7000, 90' LIQUID APPLICATOR
8	1	AM7124	HITCH, 2-PT, CAT IV
8A	2	AP3136	BUSHING, SELF-LUBRICATED, 2 ID X 2-3/4 LONG
9	2	AM7128	BUSHING, CAT III CONVERSION, 1-1/2" ID X 7-3/4" OAL
10	2	BM3483	PIN, 2 X 18-1/2 OAL
11	2	BM3626	PIN, CATEGORY III, LOWER LINK, 14-5/8"
12	2	BM3631	PIN, CATEGORY IV, LOWER LINK
13	4	BM3645	PIN, 1-3/4" X 12-1/8" OAL, PLTD, W/ HOLES & ZERK
14	4	BP3135	HEX CAP SCREW, 5/8"-11 X 3-1/2", GRD 5, PLTD
15	6	BP3136	HEX CAP SCREW, 5/8"-11 X 4, GRD 5, PLTD
16	8	BP3205	MACHINERY BUSHING, 2-1/2" OD X 1-3/4" ID, 10GA, PLTD
17	10	BP3375	NUT, HEX LOCK, 5/8"-11, NYLOCK
18	44	BP3441	HEX CAP SCREW, 3/4"-10 X 2", GRD 8, PLTD
19	44	BP3442	NUT, HEX LOCK, 3/4"-10, TOP LOCK, GRD C, PLTD
20	2	BP3502	PIN, HITCH, 3/4 X 4-1/2 USEABLE
21	2	BP3504	PIN, HAIRCLIP, 1/8"
22	3	BP3599	MACHINERY BUSHING, 3 OD X 2 ID X 10GA

AT7000 Cart Frame (77000103)

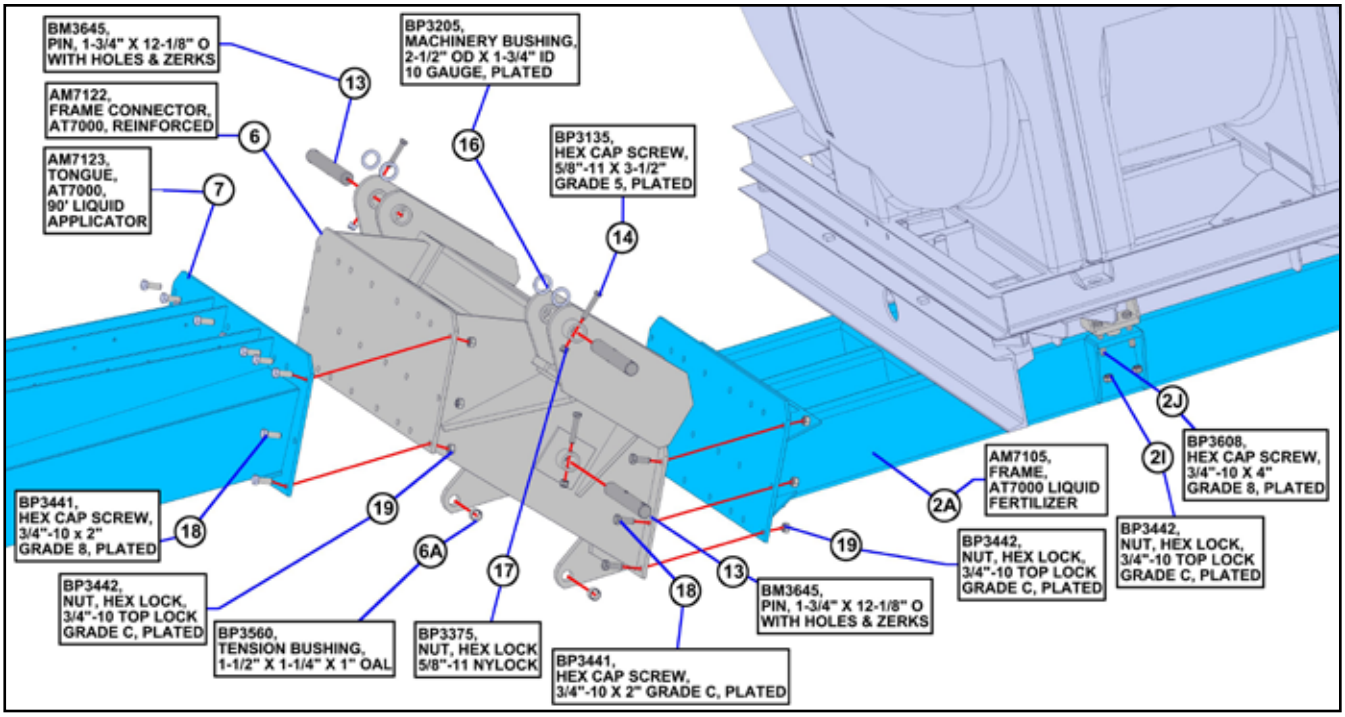

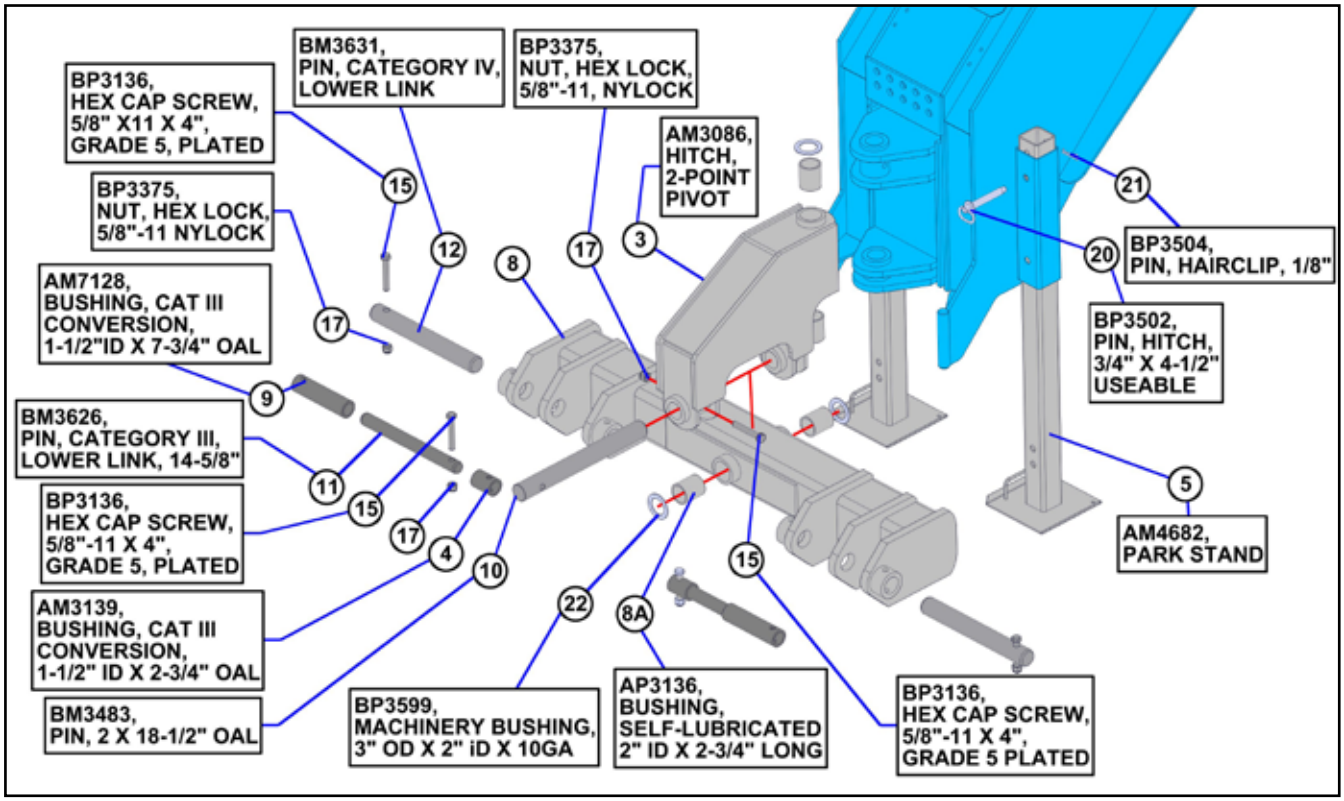

AT7000 Cart Frame (77000103)

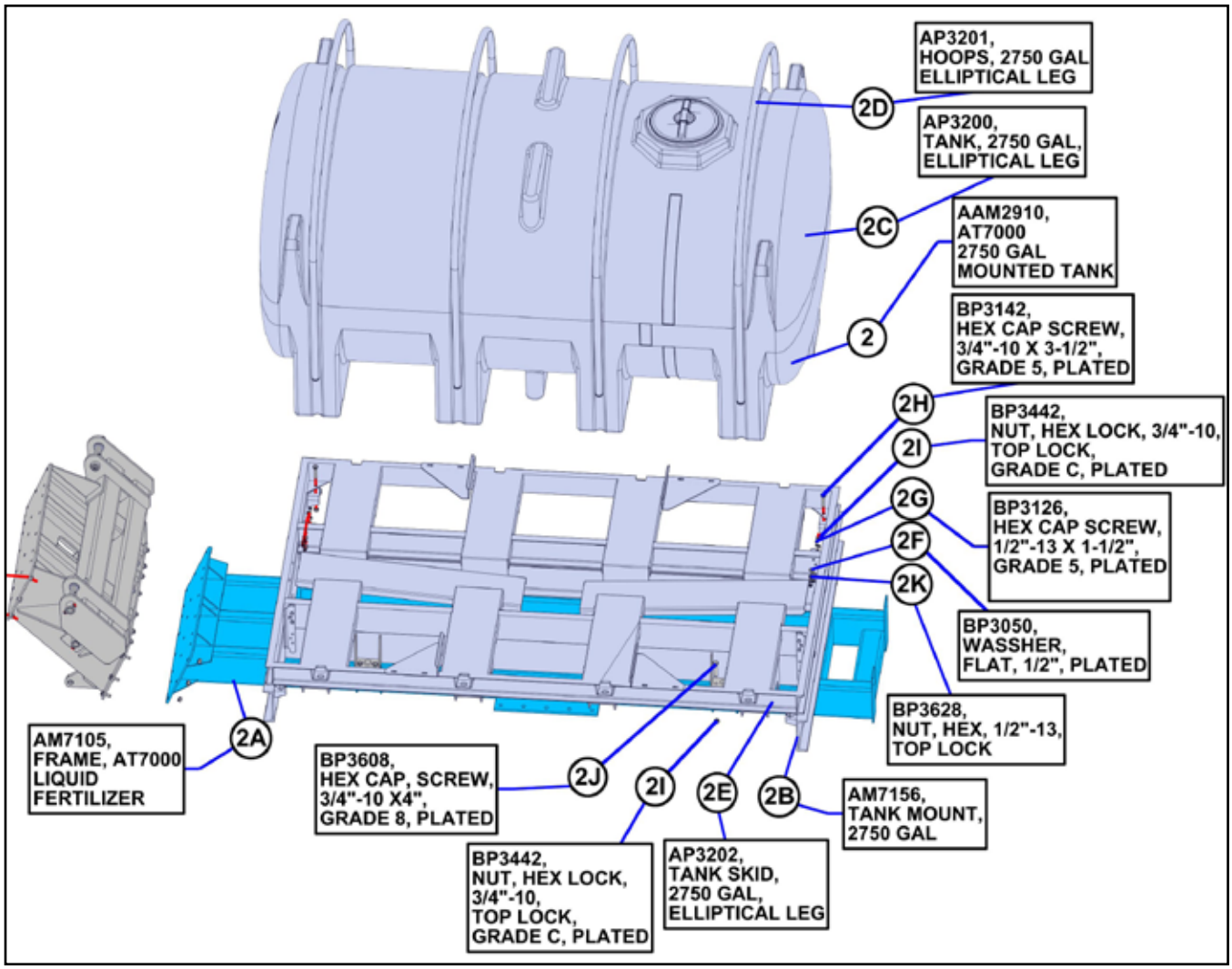

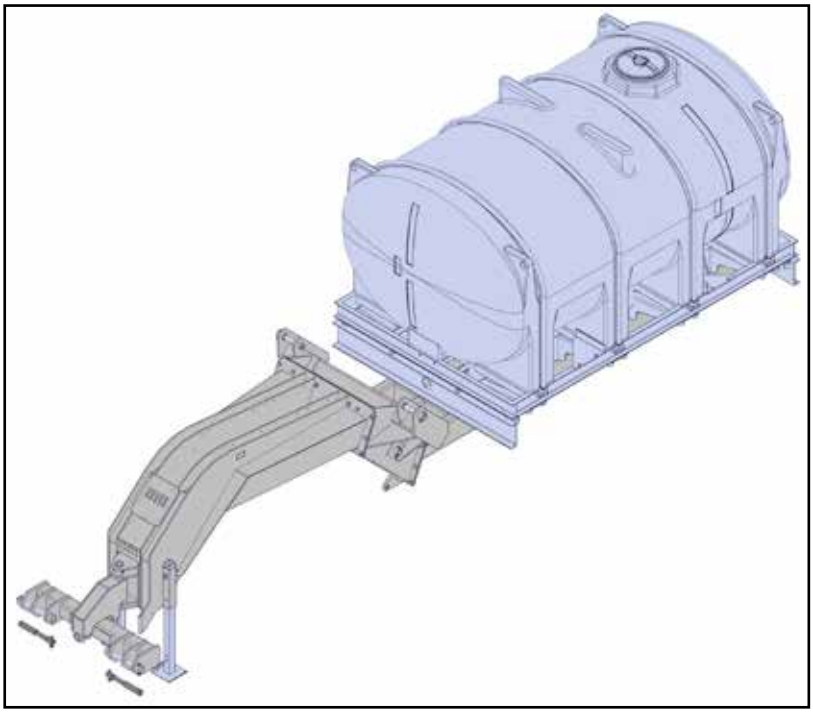

AT7000 Track Assembly (77000107)

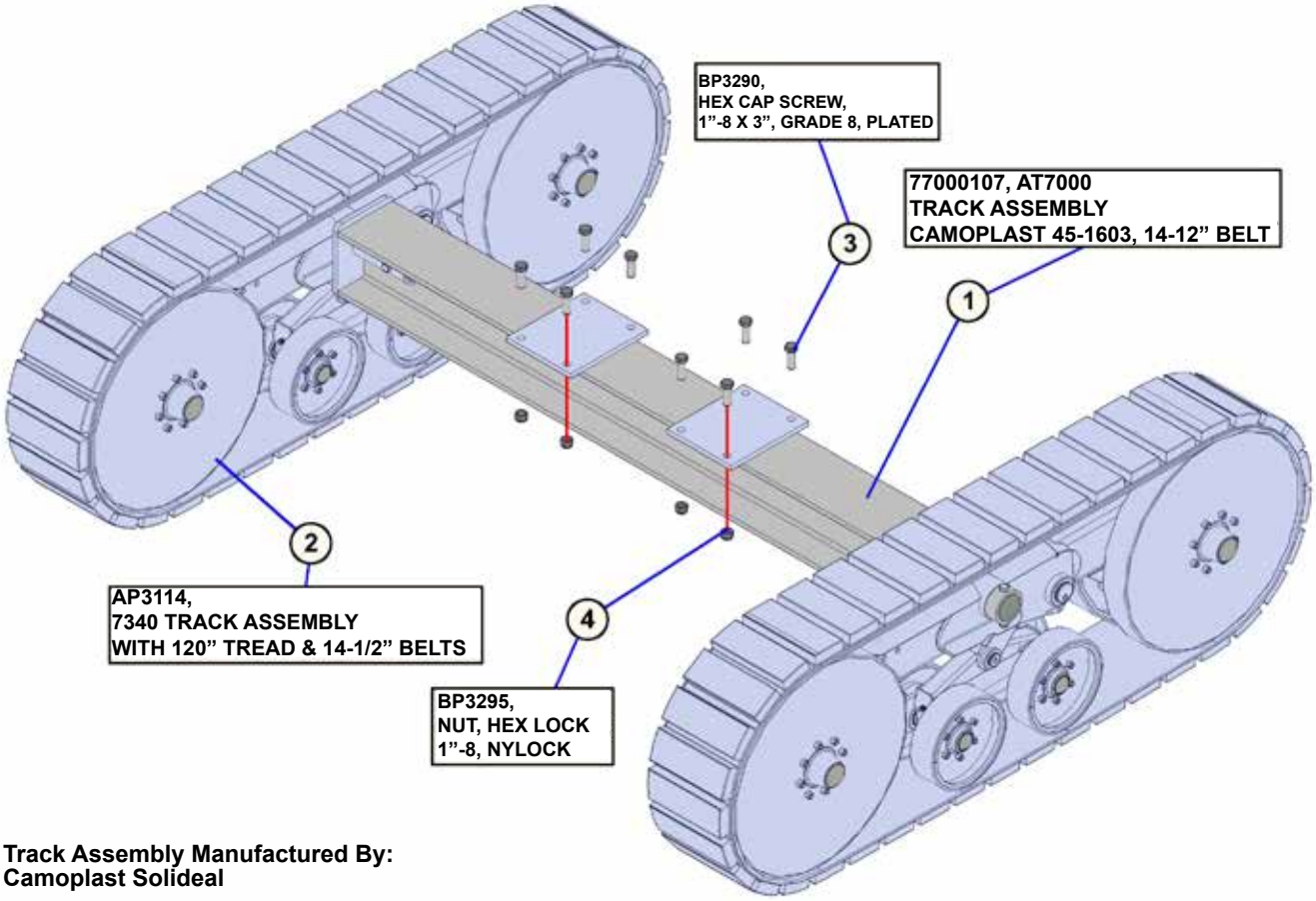

Track Assembly Manufactured By:
Camoplast Solideal

BOM ID	Qty	Item No	Description
1	1	77000107	AT7000, TRACK ASSEMBLY, CAMOPLAST 45-1603, 14-1/2” BELT
2	1	AP3114	7340 TRACK ASSEMBLY WITH 120” TREAD & 14-1/2” BELTS
3	8	BP3290	HEX CAP SCREW, 1”-8 X 3”, GRADE 8, PLATED
4	8	BP3295	NUT, HEX LOCK, 1”-8, NYLOCK

AT7000 Rocker Wheel Assembly (77000108)

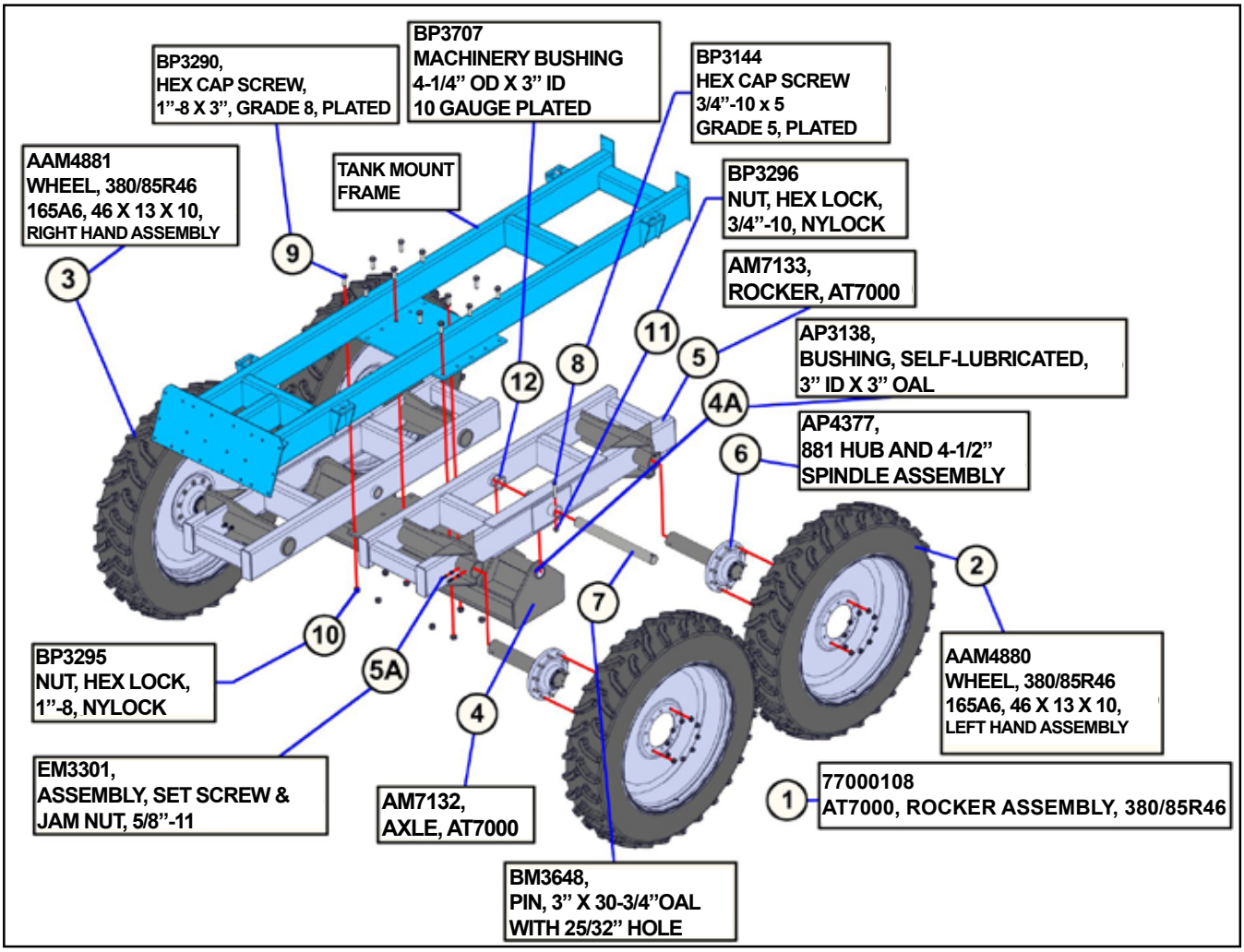

BOM ID	Qty	Item No	Description
1	1	77000108	AT7000, ROCKER ASSEMBLY
2	2	AAM4880	WHEEL, 380/85R46, 165A6, 46 X 13 X 10 , LEFT HAND ASSEMBLY
3	2	AAM4881	WHEEL, 380/85R46 165A8, 46 X 13 X 10, RIGHT HAND ASSEMBLY
4	1	AM7132	AXLE, AT7000
4A	4	AP3138	BUSHING, SELF-LUBRICATED, 3” ID X 3” LONG
5	2	AM7133	ROCKER, AT7000
5A	16	EM3301	SET SCREW & JAM NUT, 5/8”-11
6	4	AP4377	881 HUB AND 4-1/2” SPINDLE ASSEMBLY
7	2	BM3648	PIN, 3” X 30-3/4” OAL, WITH 25/32” HOLE, PLATED
8	2	BP3144	HEX CAP SCREW, 3/4”-10 X 5”, GRADE 5, PLATED
9	12	BP3290	HEX CAP SCREW, 1”-8 X 3”, GRADE 8, PLATED
10	12	BP3295	NUT, HEX LOCK, 1”-8, NYLOCK
11	2	BP3296	NUT, HEX LOCK, 3/4”-10, NYLOCK
12	4	BP3707	MACHINERY BUSHING, 4-1/4” OD X 3” ID, 10 GAUGE, PLATED

881 Hub And 4-1/2” Spindle Assembly (AP4377)

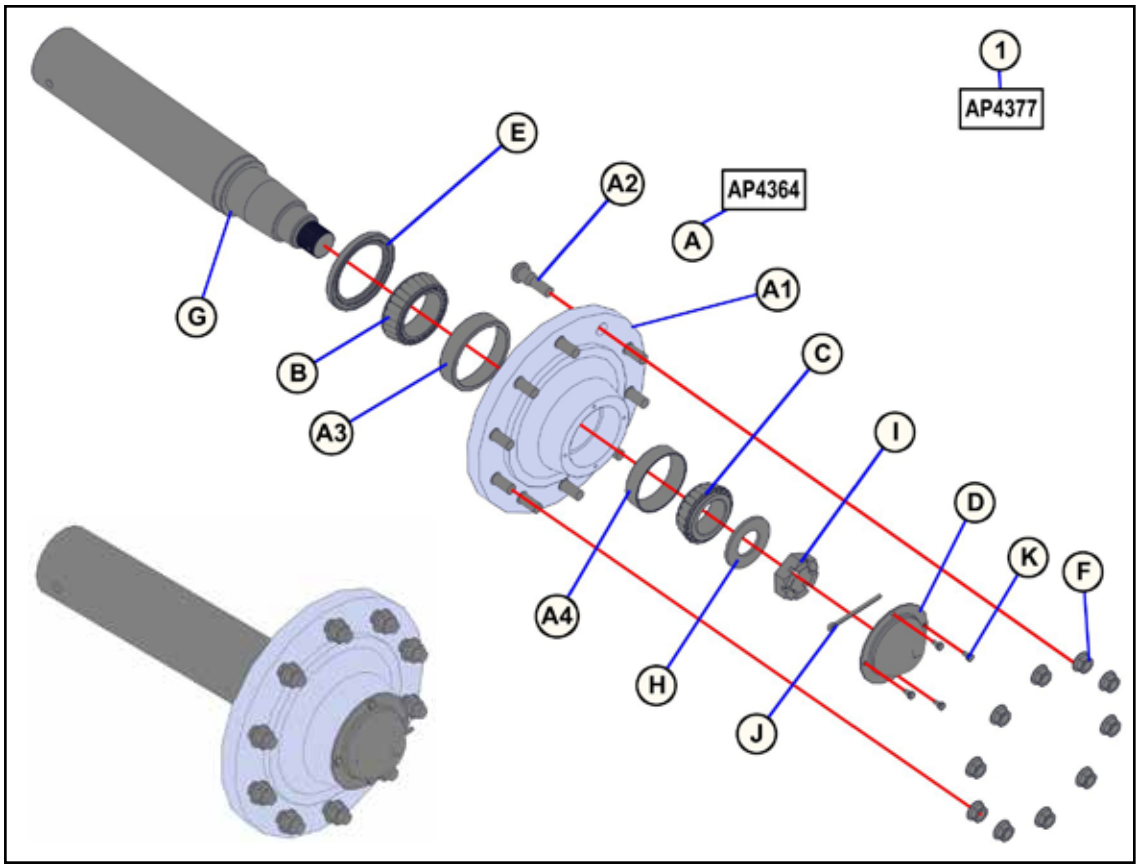

BOM ID	Qty	Item No	Description
1	1	AP4377	881 HUB AND 4-1/2” SPINDLE ASSEMBLY
A	1	AP4364	HUB WITH CUPS, 13.187” BOLT CIRCLE, 11.03” PILOT, 881
A1	1	AP4364-Hub	HUB, 10 BOLT, 13.187” BOLT CIRCLE, 11.03” PILOT, 881
A2	10	AP4370	BOLT, WHEEL STUD, 3/4”-16 X 2-3/4”
A3	1	AP4371	BEARING CUP
A4	1	AP4372	BEARING CUP
B	1	AP4365	BEARING CONE, HM212049
C	1	AP4366	BEARING CONE, HM212049
D	1	AP4367	HUB CAP DC-28
E	1	AP4368	GREASE SEAL, 4.375” SHAFT X 6.001” OD X 0.5000”
F	10	AP4369	NUT, HEX FLANGE, 3/4”-16, GRADE 5, ZINC PLATED
G	1	AP4373	SPINDLE, 4-1/2” X 27”
H	1	AP4374	WASHER, SPINDLE, 4” X 2-1/16” X .250”
I	1	AP4375	NUT, SPINDLE 2-12
J	1	AP4376	PIN, COTTER, 5/16” X 4”
K	4	BP3262	BOLT, HEX HEAD MACHINE, 5/16”-18 X 1/2”, PLATED

380/85R46 Wheels (AAM4880 LH and AAM4881 RH)

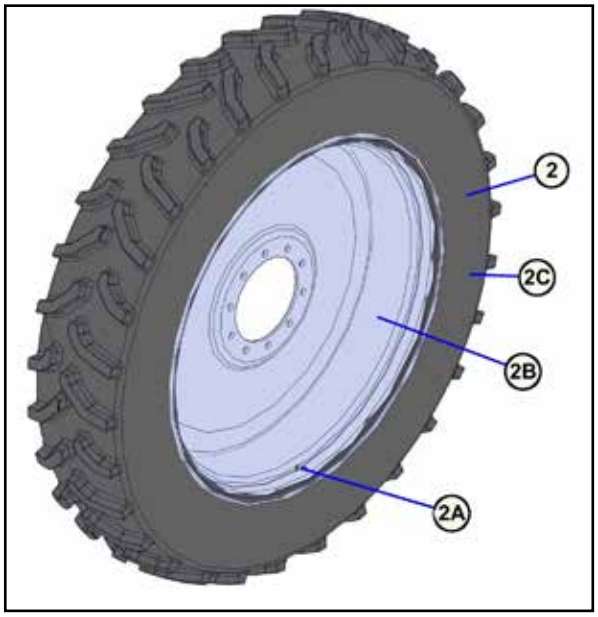

BOM ID	Qty	Item No	Description
2	2	AAM4880	WHEEL, 380/85R46, 165A6, 46 X 13 X 10 , LEFT HAND ASSEMBLY
2A	1	AP2790	VALVE STEM, METAL
2B	1	AP4382	RIM, 46 X 13 X 10, WHITE,-1/4" OFFSET, 13.189" BC
2C	1	AP4384	TIRE, 380/85R46 TRACTION

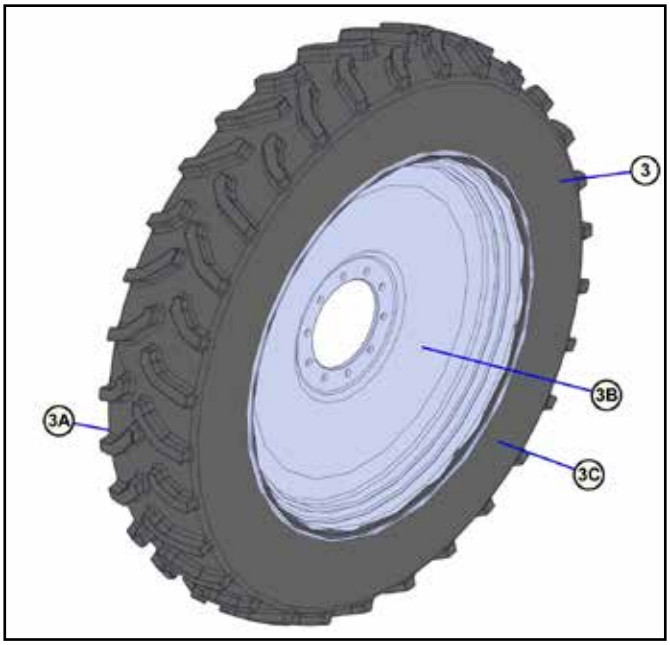

BOM ID	Qty	Item No	Description
3	2	AAM4881	WHEEL, 380/85R46 165A8, 46 X 13 X 10, RIGHT HAND ASSEMBLY
3A	1	AP2790	VALVE STEM, METAL
3B	1	AP4382	RIM, 46 X 13 X 10, WHITE,-1/4" OFFSET, 13.189" BC
3C	1	AP4384	TIRE, 380/85R46 TRACTION

► **Bundle Number: 77000103**

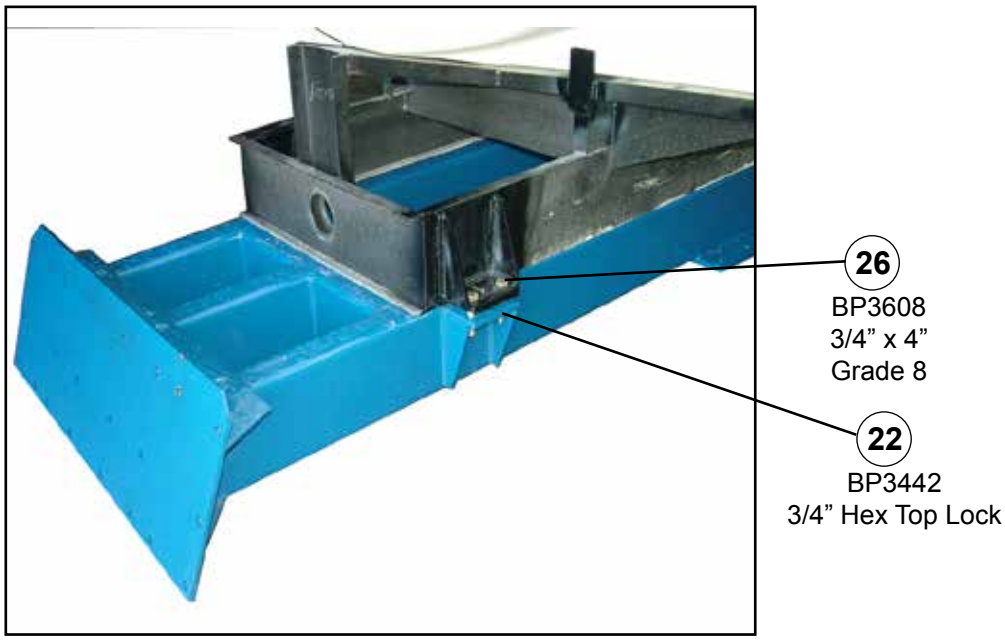

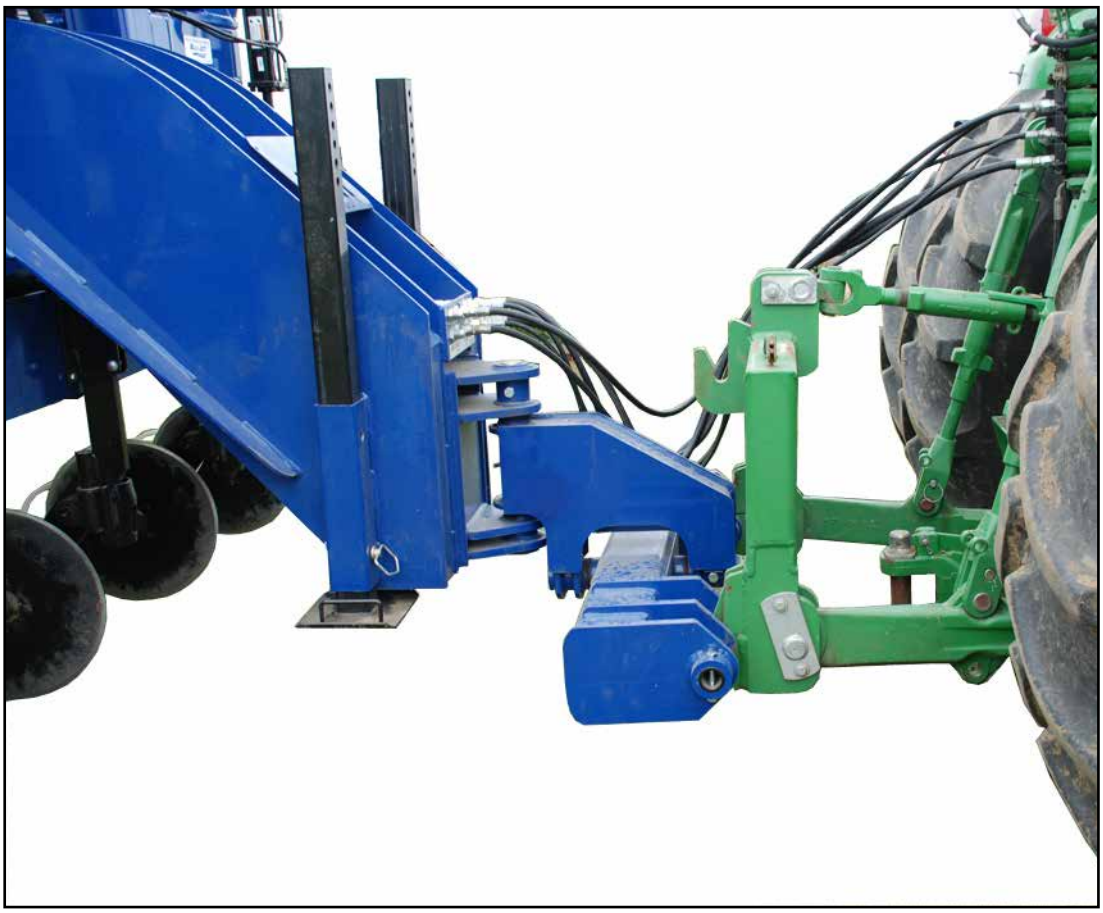

► PKG00212

BOM ID	Qty	Item No	Description
1	1	AM7116	CENTER SECTION, 90’ LIQUID APPLICATOR
1A	2	BP3072	GREASE ZERK, 1/4”-28
2	1	AM7117	TRANSPORT LOCK LEG, 90’ LIQUID APPLICATOR
2A	2	BP3072	GREASE ZERK, 1/4”-28
3	1	AM7120	ARM, TOOLBAR LIFT, LOWER, 90’ LIQUID APPLICATOR
3A	2	BP3560	TENSION BUSHING, 1-1/2” X 1-1/4” X 1” OAL
4	2	AM7121	ARM, TOOLBAR LIFT, UPPER, 90’ LIQUID
4A	8	BP3538	TENSION BUSHING, 2” X 1-3/4” X 1-1/2” OAL
5	2	BM3486	PIN, 1-1/4” X 10-7/16” OAL, WITH 13/32” HOLE, PLATED
6	4	BM3645	PIN, 1-3/4” X 12-1/8” OAL, PLATED, WITH HOLES & ZERK
7	2	BM3649	PIN, WING LATCH, 2” X 13” WITH CYLINDER LUG, PLATED
8	2	BP3096	HEX CAP SCREW, 3/8”-16 X 2-1/2”, GRADE 5, PLATED
9	4	BP3135	HEX CAP SCREW, 5/8”-11 X 3-1/2”, GRADE 5, PLATED
10	8	BP3205	MACHINERY BUSHING, 2-1/2” OD X 1-3/4” ID, 10 GAUGE, PLATED
11	4	BP3375	NUT, HEX LOCK, 5/8”-11, NYLOCK
12	2	CP2660	NUT, HEX LOCK, 3/8”-16, NYLOCK

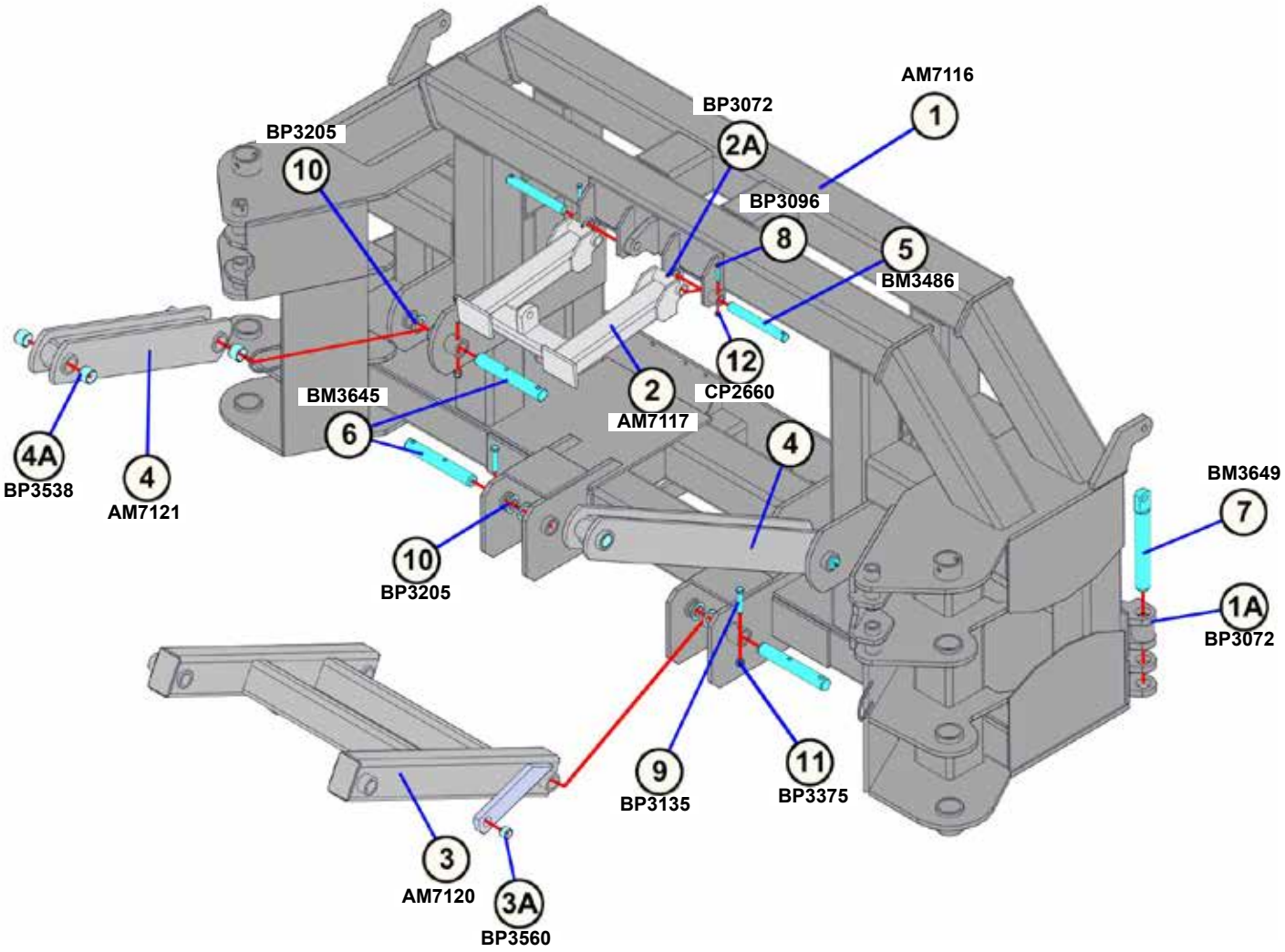

AT7000 Liquid Applicator 80’ & 90’ Tool Bar
PKG00213 Primary Wings

▶ **PKG00213**

BOM ID	Qty	Item No	Description
1	1	AM7114	WING, PRIMARY, LEFT HAND, 90’ LIQUID APPLICATOR
1A	4	AP2903	TENSION BUSHING, 3-1/4” X 3” X 2” OAL
1B	4	BP3072	GREASE ZERK, 1/4”-28
1C	2	BP3516	TENSION BUSHING, 1-1/4” X 1” X 1” OAL
2	1	AM7115	WING, PRIMARY, RIGHT HAND, 90’ LIQUID APPLICATOR
2A	4	AP2903	TENSION BUSHING, 3-1/4” X 3” X 2” OAL
2B	4	BP3072	GREASE ZERK, 1/4”-28
2C	2	BP3516	TENSION BUSHING, 1-1/4” X 1” X 1” OAL
3	4	BM3647	PIN, 3” X 15-3/4” OAL, WITH 25/32” HOLE, PLATED
4	2	BM3651	PIN, 1-1/4” X 14-7/8” OAL
5	2	BP3096	HEX CAP SCREW, 3/8”-16 X 2-1/2”, GRADE 5, PLATED
6	4	BP3144	HEX CAP SCREW, 3/4”-10 X 5”, GRADE 5, PLATED
7	4	BP3296	NUT, HEX LOCK, 3/4”-10, NYLOCK
8	4	BP3707	MACHINERY BUSHING, 4-1/4” OD X 3” ID, 10 GAUGE, PLATED
9	2	CP2660	NUT, HEX LOCK, 3/8”-16, NYLOCK

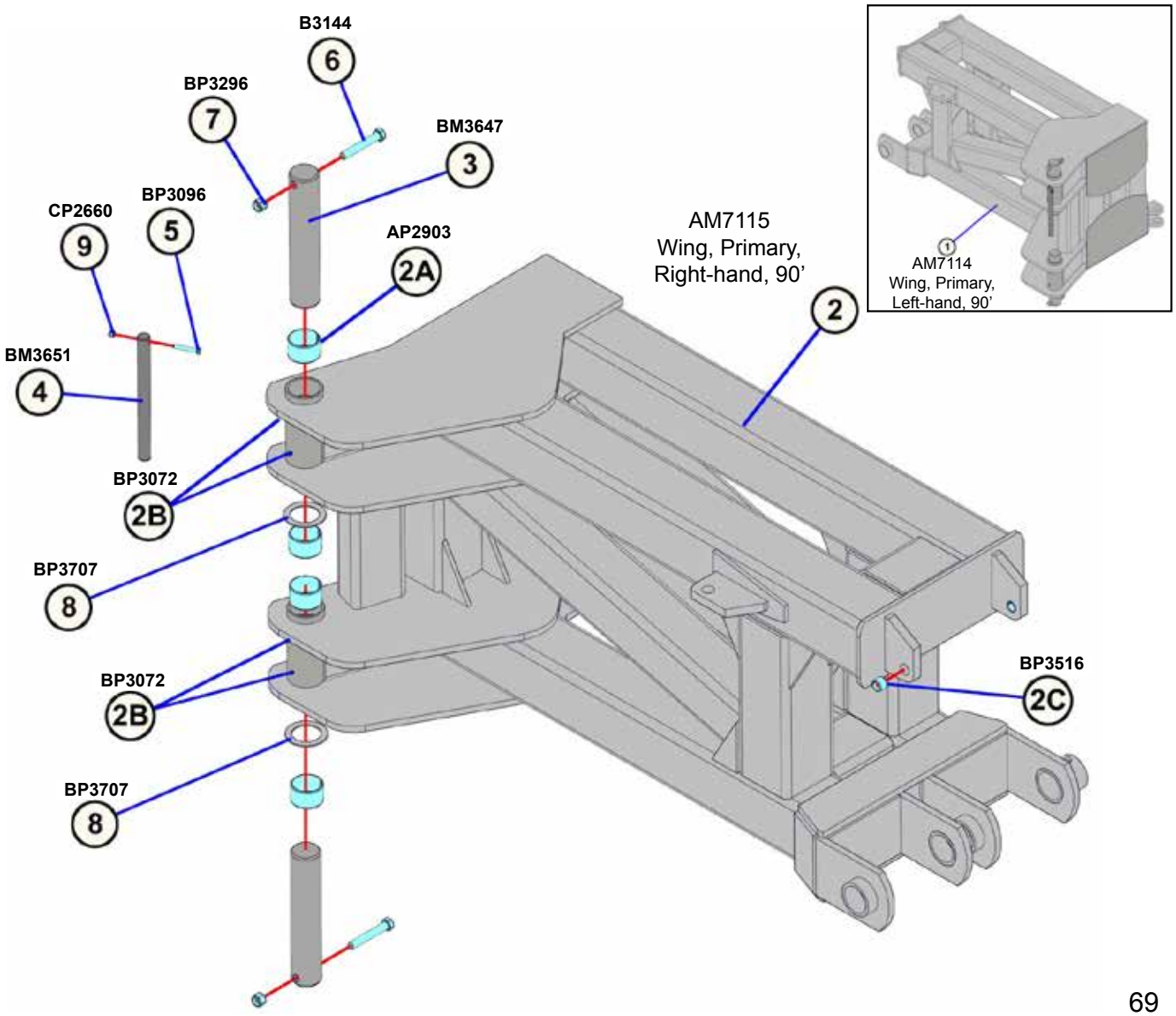

► **PKG00214**

BOM ID	Qty	Item No	Description
1	2	AM7113	WING, SECONDARY, 90’ LIQUID APPLICATOR
1A	8	AP2903	TENSION BUSHING, 3-1/4” X 3” X 2” OAL
1B	8	BP3213	GREASE ZERK
2	2	AM7118	WING STOP, 90’ LIQUID
3	2	BM3648	PIN, 3” X 30-3/4” OAL, WITH 25/32” HOLE, PLATED
4	8	BP3042	NUT, HEX, 1/2”-13, GRADE 2, PLATED
5	8	BP3043	WASHER, LOCK, 1/2”, PLATED
6	2	BP3144	HEX CAP SCREW, 3/4”-10 X 5”, GRADE 5, PLATED
7	2	BP3296	NUT, HEX LOCK, 3/4”-10, NYLOCK
8	4	BP3330	U-BOLT, 1/2”-13 X 6”W X 5-1/8”L
9	8	BP3707	MACHINERY BUSHING, 4-1/4” OD X 3” ID, 10 GAUGE, PLATED

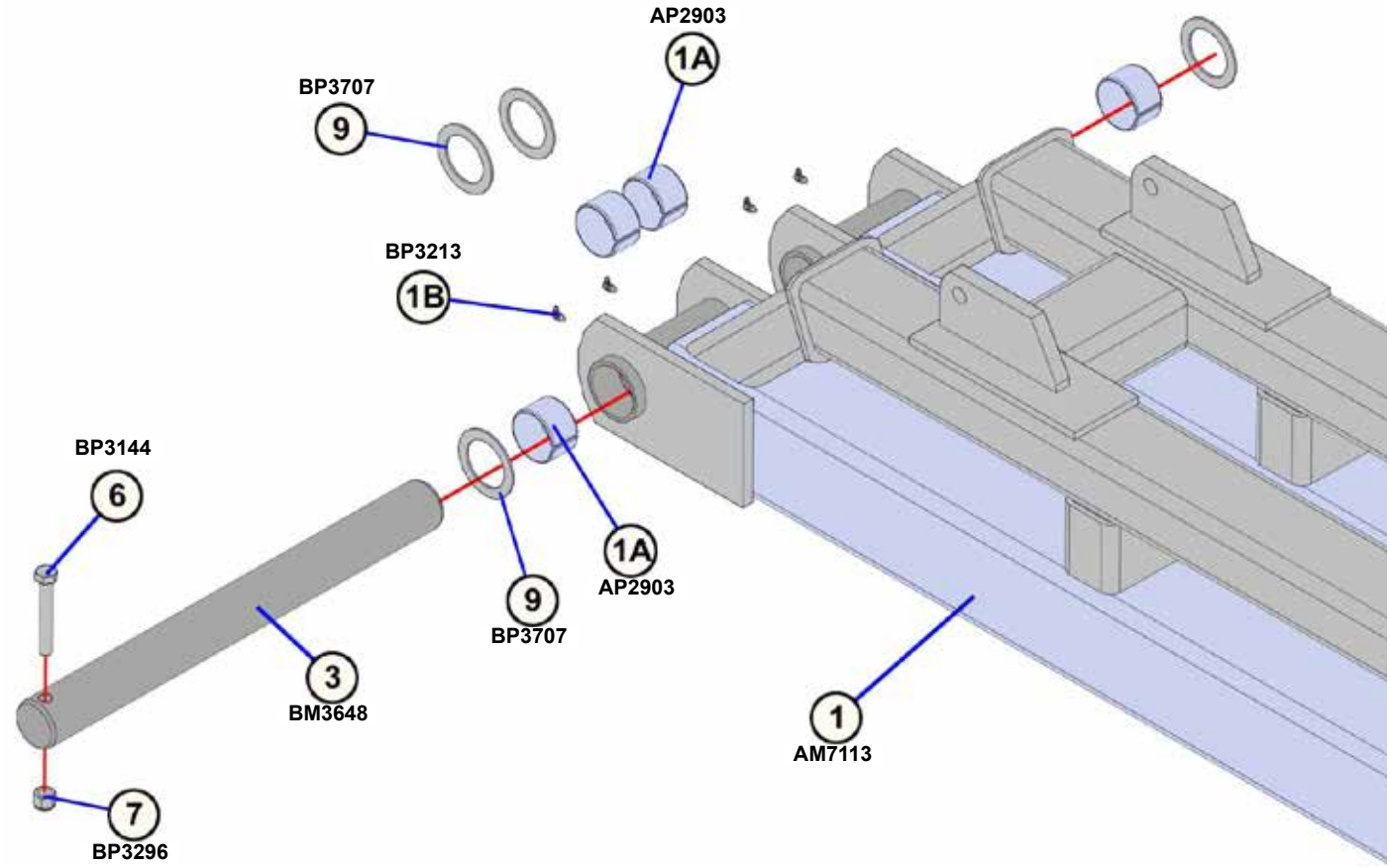

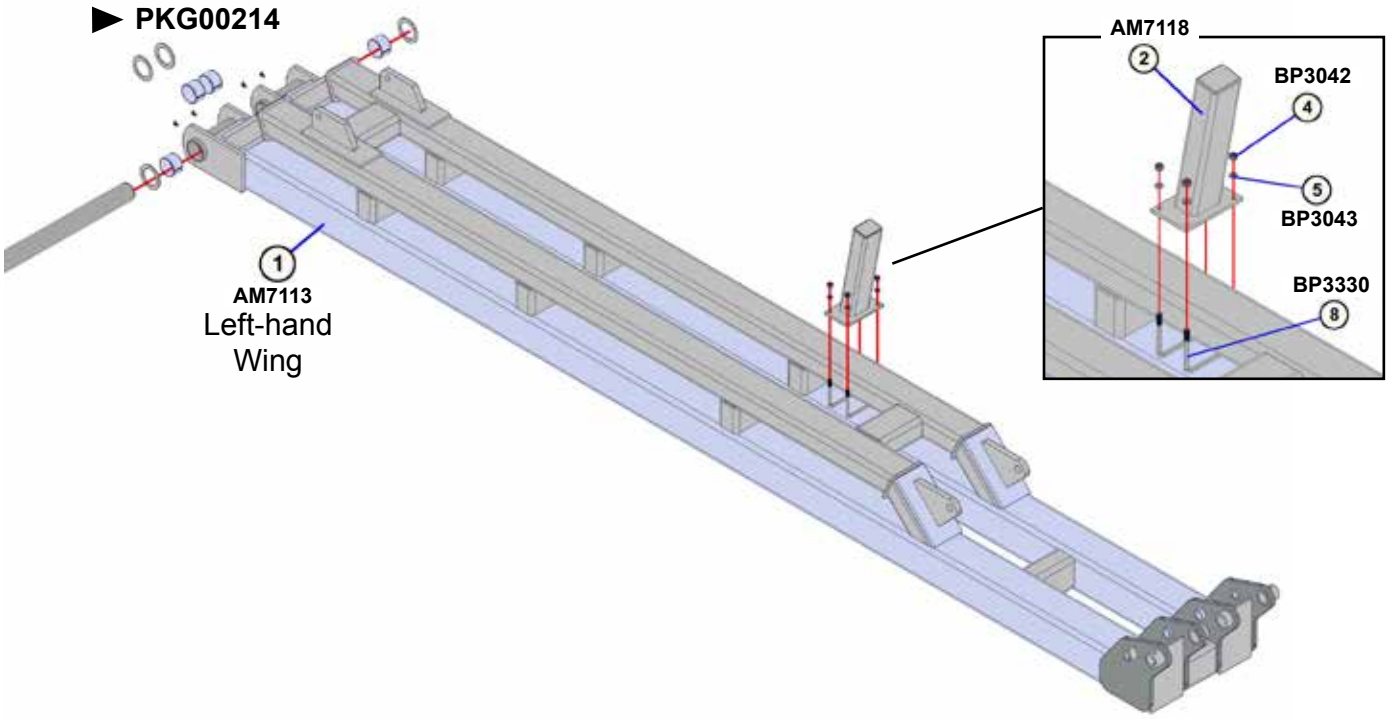
▶ PKG00214
AM7118
2
BP3042
4
5
BP3043
BP3330
8
1
AM7113
Left-hand
Wing

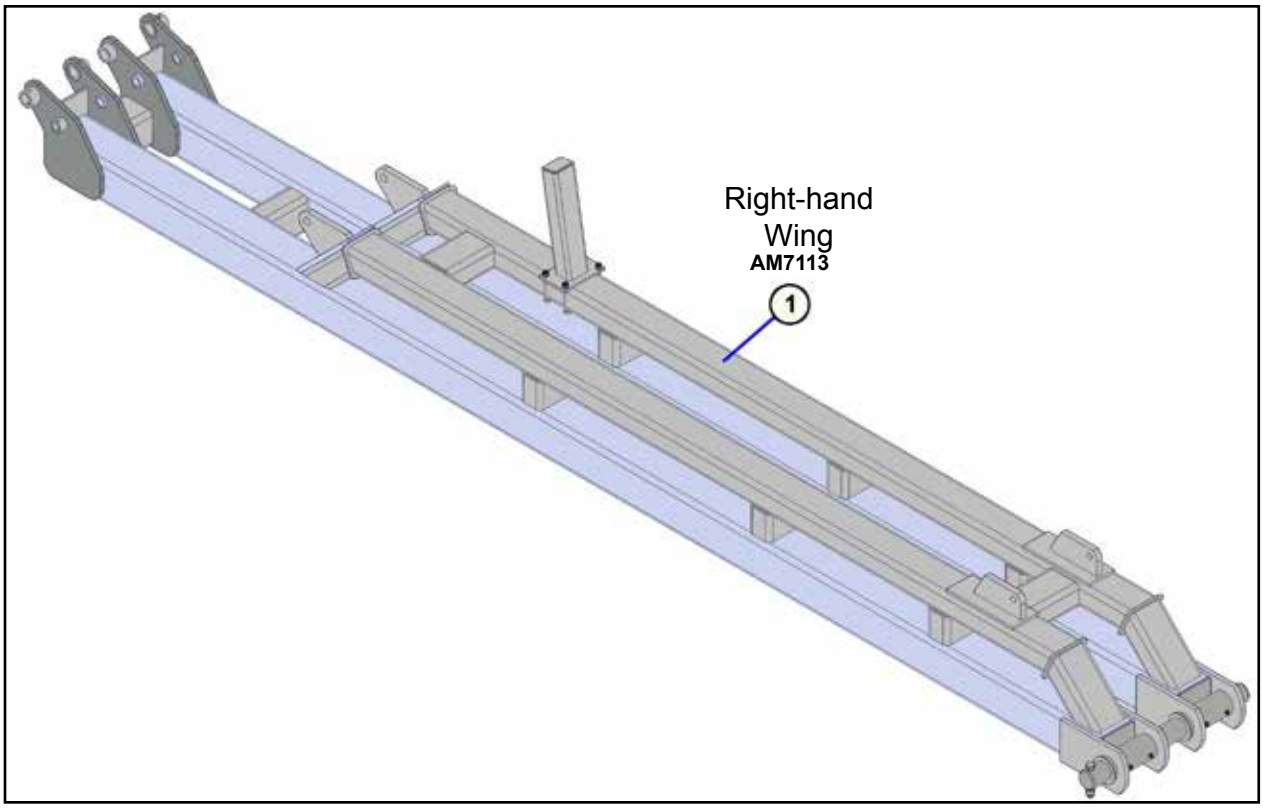
Right-hand
Wing
AM7113
1

AT7000 Liquid Applicator 90’ Tool Bar
Third Wing Linkage (Bundle 77000104)

AT7000	Task	Procedures	Illustrations

► **PKG00215**

BOM ID	Qty	Item No	Description
1	4	AM6189	LINKAGE, SECONDARY FOLD
1A	4	BP3072	GREASE ZERK, 1/4”-28
2	4	AM6197	WING LINKAGE, 12-1/4”, WITH 1-1/4” HOLE
2A	8	BP3072	GREASE ZERK, 1/4”-28
3	1	AM7111	WING, THIRD, LEFT HAND, 16’10”, 90’ LIQUID APPLICATOR
3A	2	BP3072	GREASE ZERK, 1/4”-28
4	1	AM7112	WING, THIRD, RIGHT HAND, 16’10”, 90’ LIQUID APPLICATOR
4A	2	BP3072	GREASE ZERK, 1/4”-28
5	8	AP2711	SNAP RING, 1-1/4” EXTERNAL, HEAVY DUTY
6	4	BM3485	PIN, 1-3/4” X 12-1/8” OAL, WITH 21/32” HOLE, PLATED
7	4	BM3486	PIN, 1-1/4” X 10-7/16” OAL, WITH 13/32” HOLE, PLATED
8	4	BM3487	PIN, 1” X 7-3/4” OAL, WITH 13/32” HOLE, PLATED
9	4	BM3548	PIN, 1-1/4” X 4-3/4” OAL, DOUBLE GROOVED, PLATED
10	4	BP3096	HEX CAP SCREW, 3/8”-16 X 2-1/2”, GRADE 5, PLATED
11	4	BP3115	HEX CAP SCREW, 3/8”-16 X 2”, GRADE 5, PLATED
12	4	BP3135	HEX CAP SCREW, 5/8”-11 X 3-1/2”, GRADE 5, PLATED
13	8	BP3215	MACHINERY BUSHING, 1-1/2” OD X 1” ID, 14 GAUGE, PLATED
14	16	BP3249	MACHINERY BUSHING, 1-7/8” OD X 1-1/4” ID, 14 GAUGE, PLATED
15	4	BP3375	NUT, HEX LOCK, 5/8”-11, NYLOCK
16	8	CP2660	NUT, HEX LOCK, 3/8”-16, NYLOCK

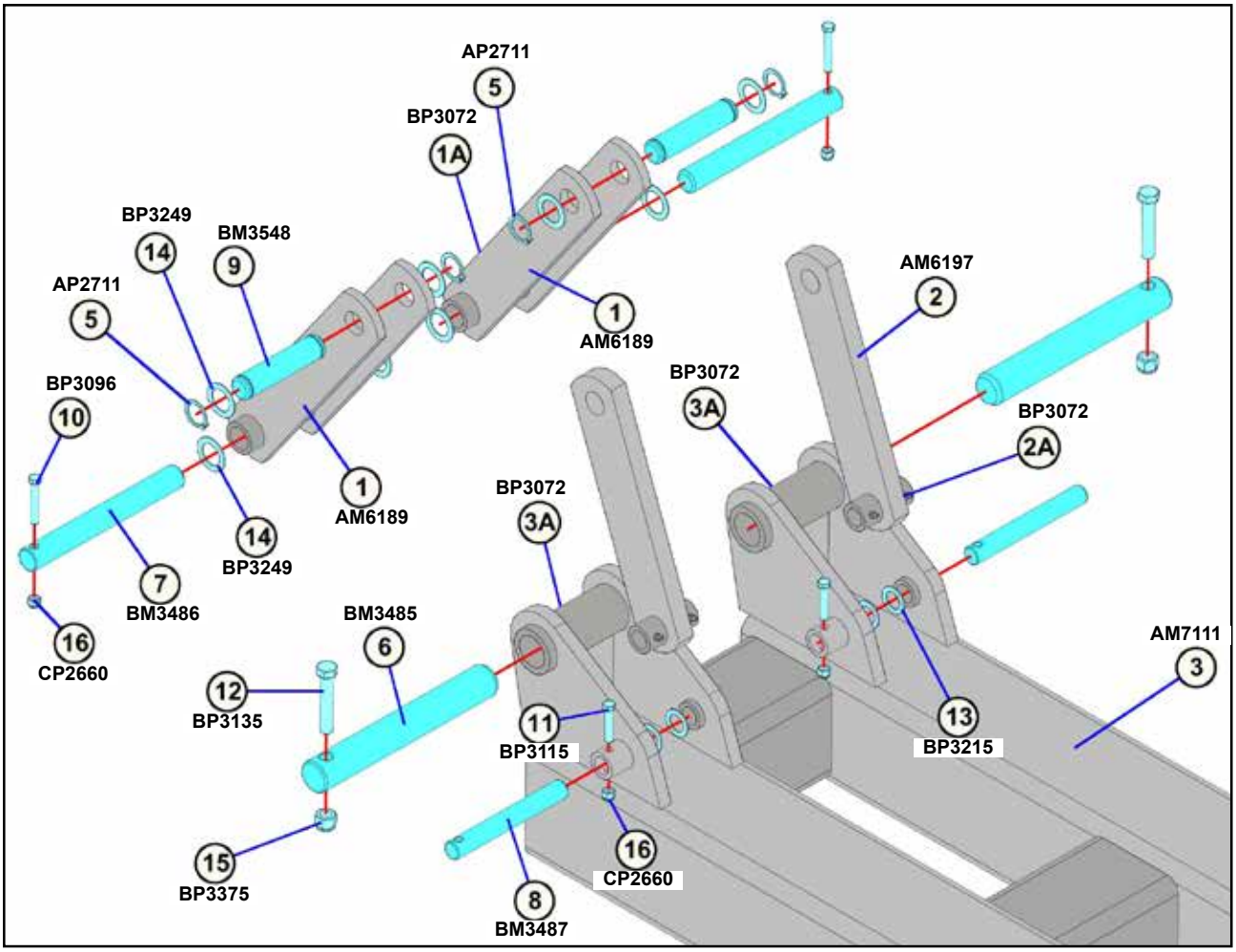

▶ **PKG00215**

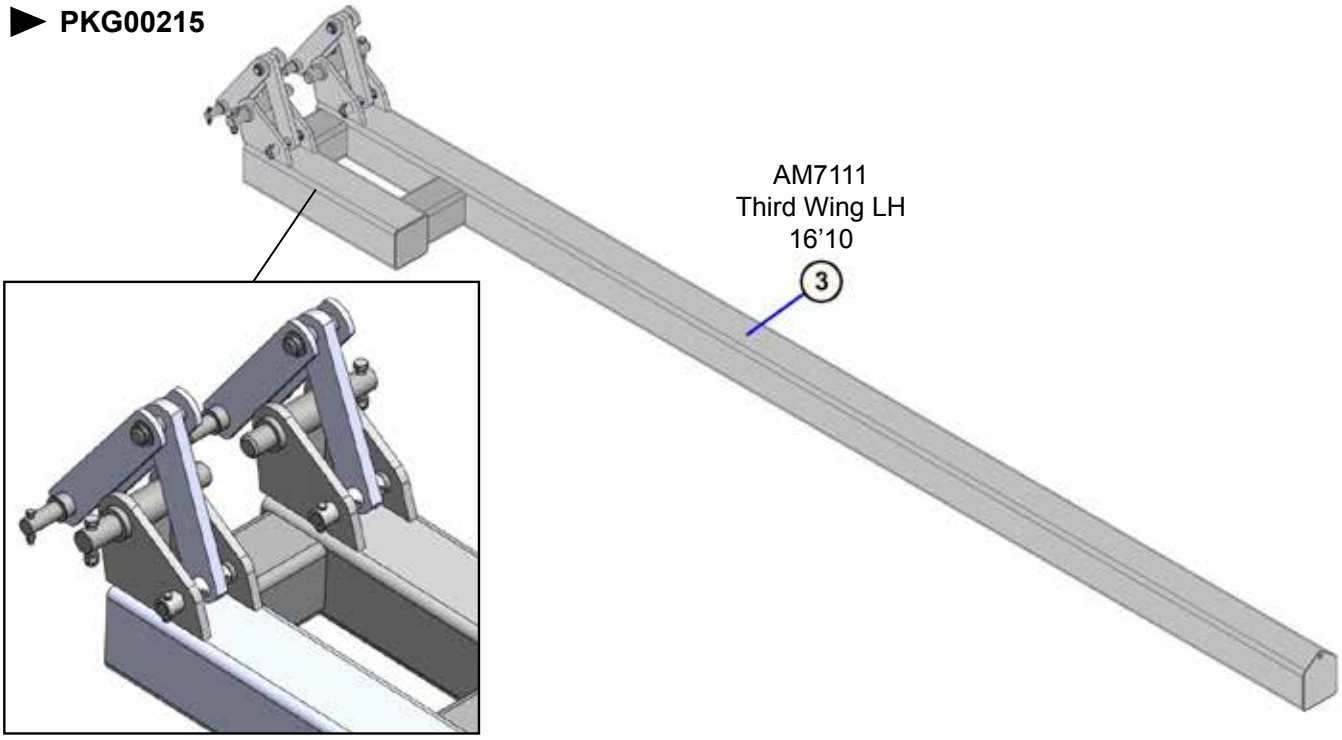

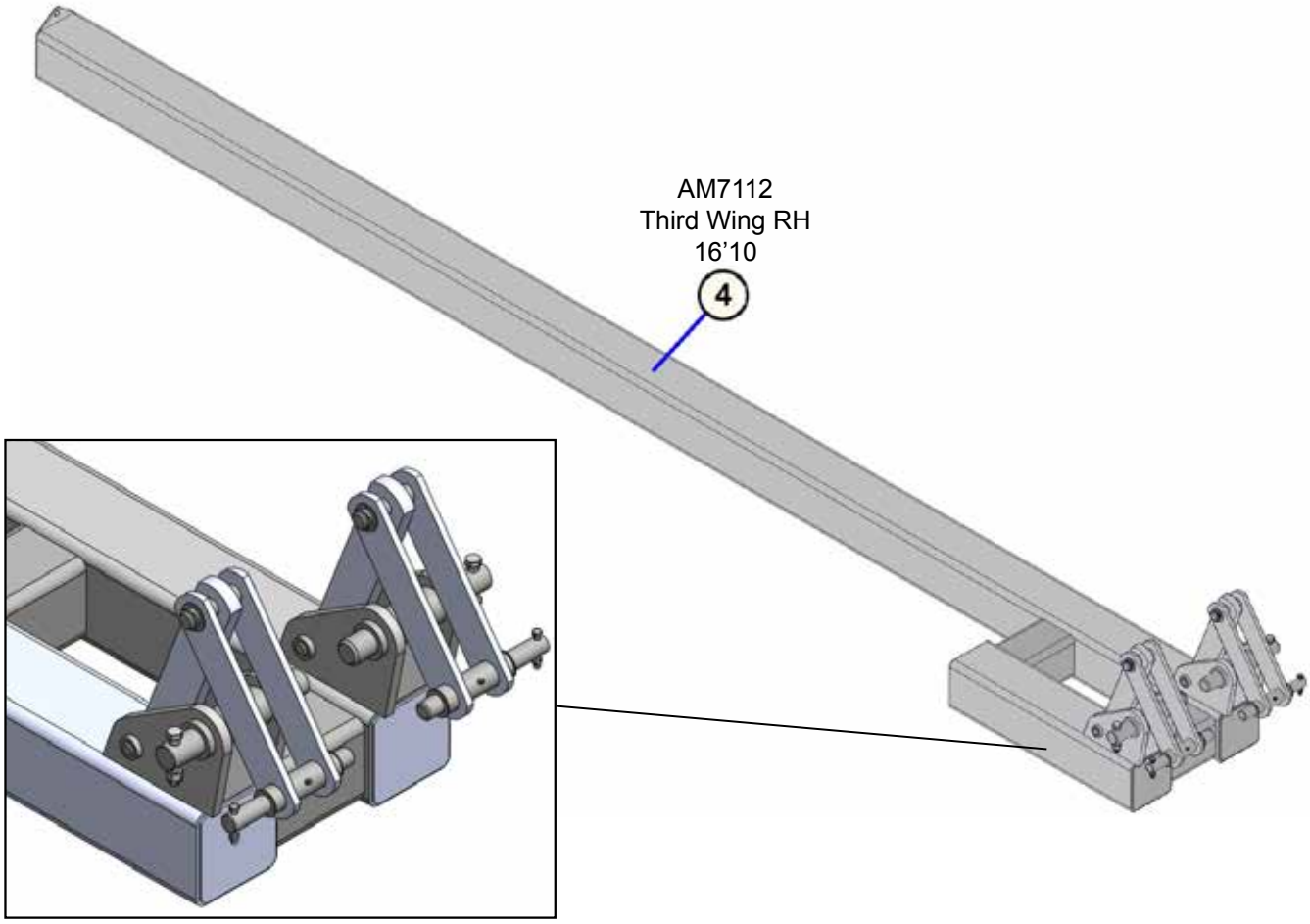

AT7000 Liquid Applicator 80’ Tool Bar
Third Wing Linkage (Bundle 77000109)

AT7000	Task	Procedures	Illustrations

► **PKG00241**

BOM ID	Qty	Item No	Description
1	4	AM6189	LINKAGE, SECONDARY FOLD
1A	4	BP3072	GREASE ZERK, 1/4”-28
2	4	AM6197	WING LINKAGE, 12-1/4”, WITH 1-1/4” HOLE
2A	8	BP3072	GREASE ZERK, 1/4”-28
3	1	AM7135	WING, THIRD, LEFT HAND, 11’10”, 80’ LIQUID APPLICATOR
3A	2	BP3072	GREASE ZERK, 1/4”-28
4	1	AM7136	WING, THIRD, RIGHT HAND, 11’10”, 80’ LIQUID APPLICATOR
4A	2	BP3072	GREASE ZERK, 1/4”-28
5	8	AP2711	SNAP RING, 1-1/4” EXTERNAL, HEAVY DUTY
6	4	BM3485	PIN, 1-3/4” X 12-1/8” OAL, WITH 21/32” HOLE, PLATED
7	4	BM3486	PIN, 1-1/4” X 10-7/16” OAL, WITH 13/32” HOLE, PLATED
8	4	BM3487	PIN, 1” X 7-3/4” OAL, WITH 13/32” HOLE, PLATED
9	4	BM3548	PIN, 1-1/4” X 4-3/4” OAL, DOUBLE GROOVED, PLATED
10	4	BP3096	HEX CAP SCREW, 3/8”-16 X 2-1/2”, GRADE 5, PLATED
11	4	BP3115	HEX CAP SCREW, 3/8”-16 X 2”, GRADE 5, PLATED
12	4	BP3135	HEX CAP SCREW, 5/8”-11 X 3-1/2”, GRADE 5, PLATED
13	8	BP3215	MACHINERY BUSHING, 1-1/2” OD X 1” ID, 14 GAUGE, PLATED
14	16	BP3249	MACHINERY BUSHING, 1-7/8” OD X 1-1/4” ID, 14 GAUGE, PLATED
15	4	BP3375	NUT, HEX LOCK, 5/8”-11, NYLOCK
16	8	CP2660	NUT, HEX LOCK, 3/8”-16, NYLOCK

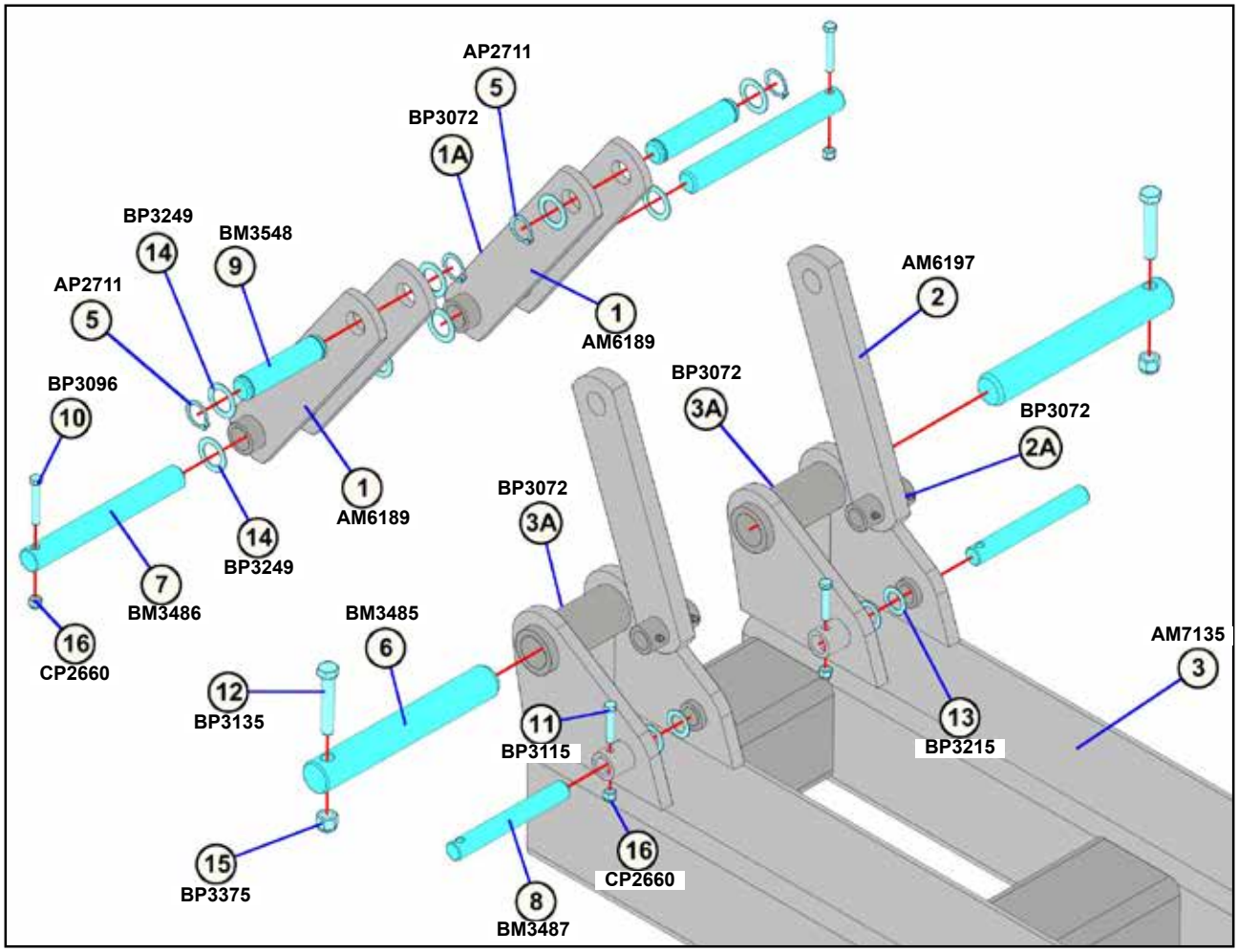

PKG00241

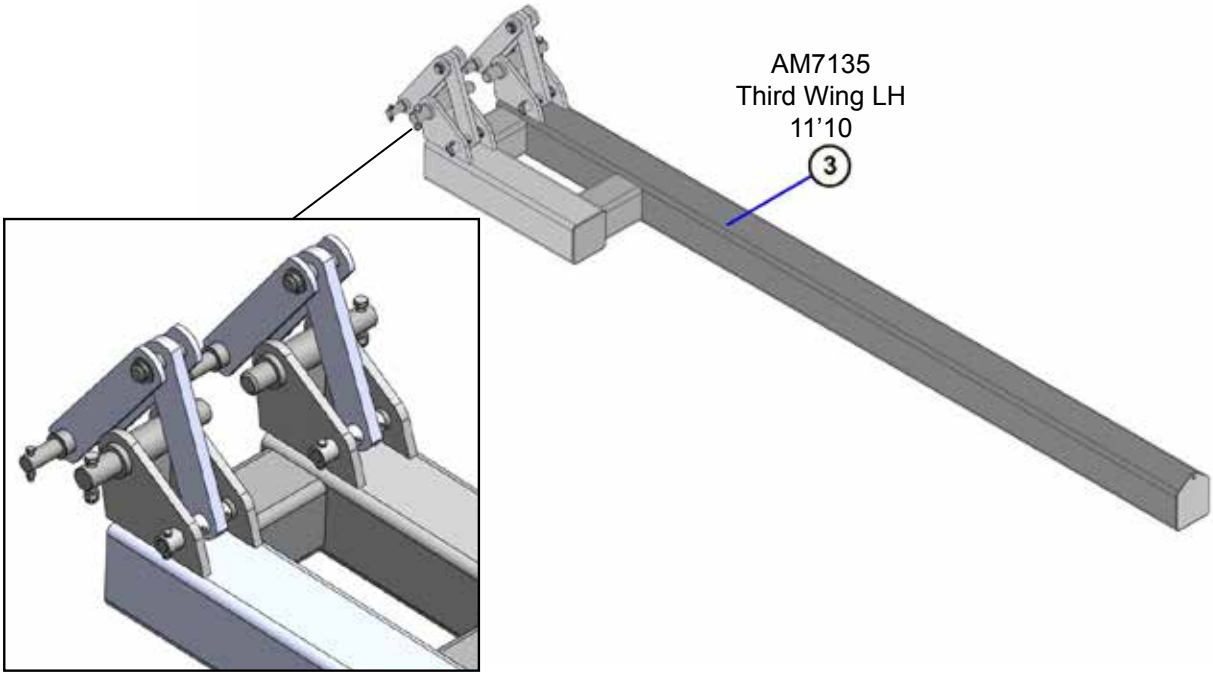

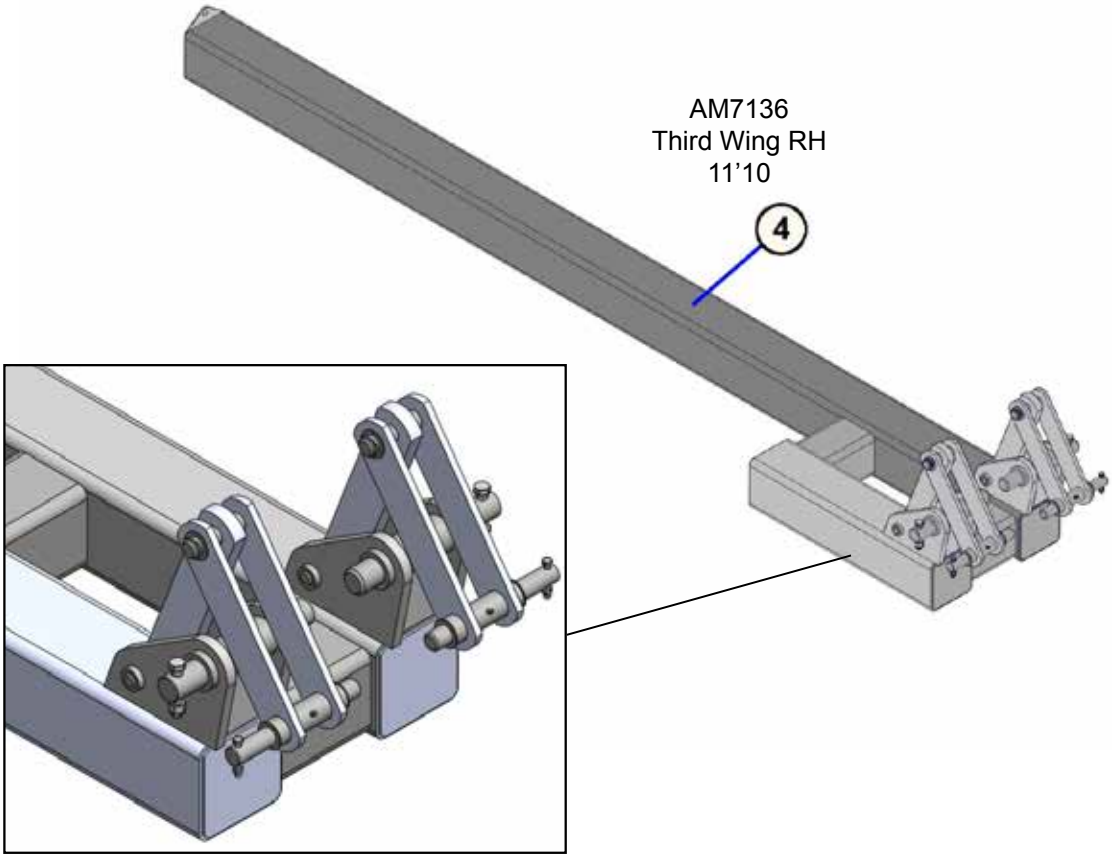

► PKG00216

BOM ID	Qty	Item No	Description
1	4	AM4015	HOSE RETAINER, CLOSED LOOP, 6” & 7” MOUNTING
2	2	AM4817	BRACKET, DEPTH COLLAR STORAGE
3	2	AP2282-1	HOSE RETAINER, 4” X 6”, WITH PLASTIC CAPS
4	8	AP2284-1	HOSE RETAINER, 7” X 7”, WITH PLASTIC CAPS
5	12	BP3001	NUT, HEX, 3/8”-16, GRADE 2, PLATED
6	12	BP3002	WASHER, LOCK, 3/8”, PLATED
7	6	BP3335	U-BOLT, 3/8”-16 X 7”W X 8”L, PLATED
8	2	BP3433	DEPTH COLLAR SET, 1-3/4” TO 2”
9	2	DP4004	TEE, 6MJ-6MJ-6MJ
10	2	DP4023	TEE, 10MJ-10MJ-10MJ
11	12	DP4086	CABLE TIE 11-3/8”
12	4	DP4097	CROSS, 10MJ-10MJ-10MJ-10MJ, 2650-10
13	4	DP4143	ADAPTER, 10MJIC-8MSAE, 90 DEGREE
14	8	DP4296	CABLE TIE 33”
15	7	DP4301	ADAPTER, 6MJ-8MSAE, 90 DEGREE
16	6	DP4379	TEE, 6FJX-6MJ-6MJ, 6602-6
17	6	DP4383	COUPLER, PIONEER, 8MQBA-8FSAE
18	8	DP4392	ADAPTER, 8MSAE-10MJIC, 6400-10-8
19	3	DP4394	ADAPTER, 8MSAE-6MJIC, 6400-6-8
20	4	DP4399	REDUCER, 10MSAR-8FSAE, 6410-10-8
21	4	DP4414	TEE, 10MJIC-10FJX-10MJIC, 6602-10
22	4	DP4418	ELBOW, 90 DEGREE, 10MJIC-10FJX, 6500-10
23	10	DP4422	ADAPTER, 10FJ-6MJ, 2406-10-6
24	7	DP4445	ELBOW, 90 DEGREE, 6MJIC-6FJX, 6500-6
25	2	DP4491	CYLINDER, HYDRAULIC 5 X 8, B500080ACDDAB07E
26	2	DP4494	CYLINDER, HYDRAULIC 3 X 8, 3000 PSI, A300080ABAAA03B
27	4	DP4525	ADAPTER, 10MSAE-10MJIC, 90 DEGREE, 6801-10
28	2	DP4550	TEE, 6FJX-6MJ-6MJ, 6600-6
29	2	DP4551	ADAPTER, 6MJ-8MSAE, WITH RESTRICTOR, 6400R-6-8-093
30	4	DP4552	CYLINDER, HYDRAULIC 4 X 8, A400080ABACB07E
31	1	DP4553	CYLINDER, 2 X 6, B200060ABAAA07E
32	2	DP4554	CYLINDER, HYDRAULIC 5 X 24, SAE-35024
33	4	DP4579	CYLINDER, HYDRAULIC 4-1/2 X 20, SIDE PORTED, B450200BCDDA07B
34	4	DP4580	ADAPTER, 6MJ-10MSAE, 6400-6-10
35	4	DP4581	ADAPTER, 6MJ-10MSAE, 90 DEGREE, 6801-6-10
36	8	DP5220	BULKHEAD UNION WITH NUT, 10MJ-10MJ, 2700-LN-10

► DDP1153

Ref.	Part No.	Req.	Description
a.	DP5018	4	Hose, Hydraulic, 1/4” x 102” (8’6”), 6FJX-6FJX
b.	DP5057	4	Hose, Hydraulic, 1/4” x 36” (3’0”), 6FJX-6FJX
c.	DP5064	8	Hose, Hydraulic, 3/8” x 24” (2’0”), 10FJX-10FJX
d.	DP5067	2	Hose, Hydraulic, 3/8” x 174” (14’6”), 10FJX-10FJX
e.	DP5152	2	Hose, Hydraulic, 1/4” x 84” (7’0”), 6FJX-6FJX
f.	DP5166	2	Hose, Hydraulic, 3/8” x 84” (7’0”), 10FJX-10FJX
g.	DP5185	2	Hose, Hydraulic, 1/2” x 84” (7’0”), 10FJX-10FJX
h.	DP5212	2	Hose, Hydraulic, 1/2” x 62” (5’2”), 10FJX-10FJX
i.	DP5269	2	Hose, Hydraulic, 1/2” x 36” (3’0”), 10FJX-10FJX
j.	DP5283	2	Hose, Hydraulic, 1/4” x 62” (5’2”), 6FJX-6FJX
k.	DP5284	2	Hose, Hydraulic, 1/4” x 136” (11’4”), 6FJX-6FJX
l.	DP5285	2	Hose, Hydraulic, 1/4” x 160” (13’4”), 6FJX-6FJX
m.	DP5286	2	Hose, Hydraulic, 1/4” x 178” (14’10”), 6FJX-6FJX
n.	DP5287	2	Hose, Hydraulic, 1/4” x 335” (27’11”), 6FJX-6FJX
o.	DP5288	2	Hose, Hydraulic, 1/4” x 359” (29’11”), 6FJX-6FJX
p.	DP5289	2	Hose, Hydraulic, 3/8” x 62” (5’2”), 10FJX-10FJX
q.	DP5290	2	Hose, Hydraulic, 3/8” x 162” (13’6”), 10FJX-10FJX

Hydraulic Package Kit (PKG00216) AT7000

AT7000	Task	Procedures	Illustrations

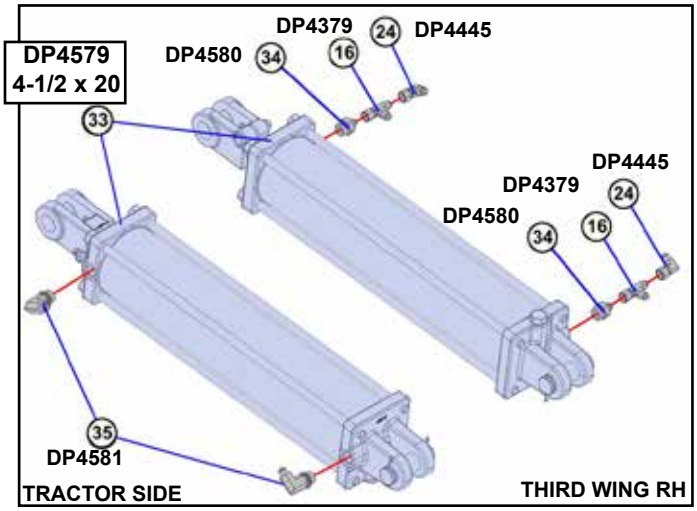

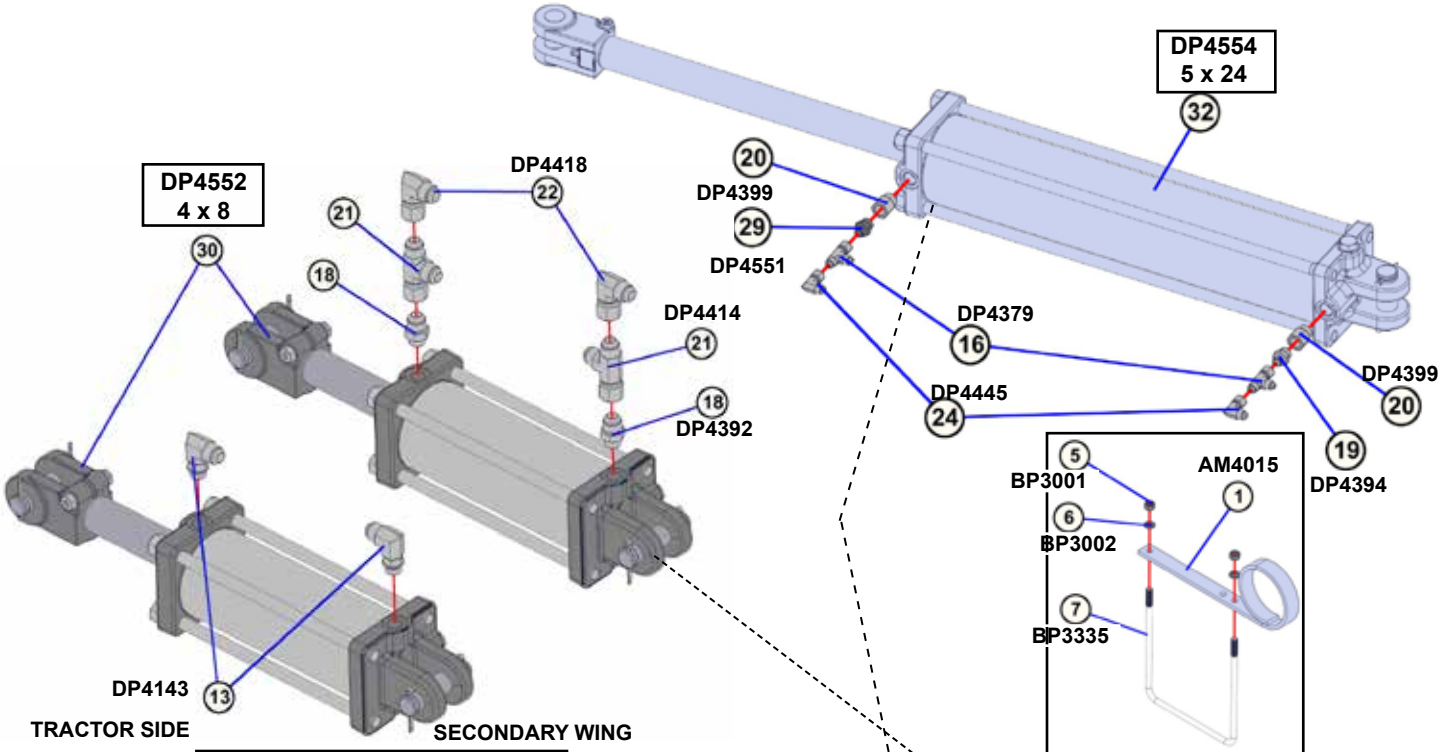

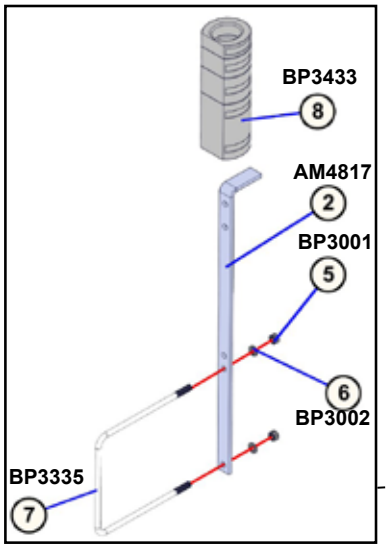

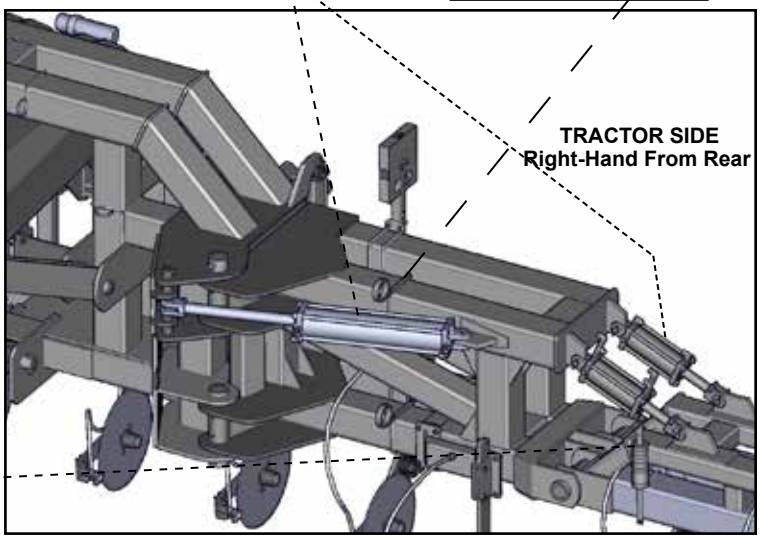

Hydraulic Package Kit (PKG00216) AT7000

AT7000	Task	Procedures	Illustrations

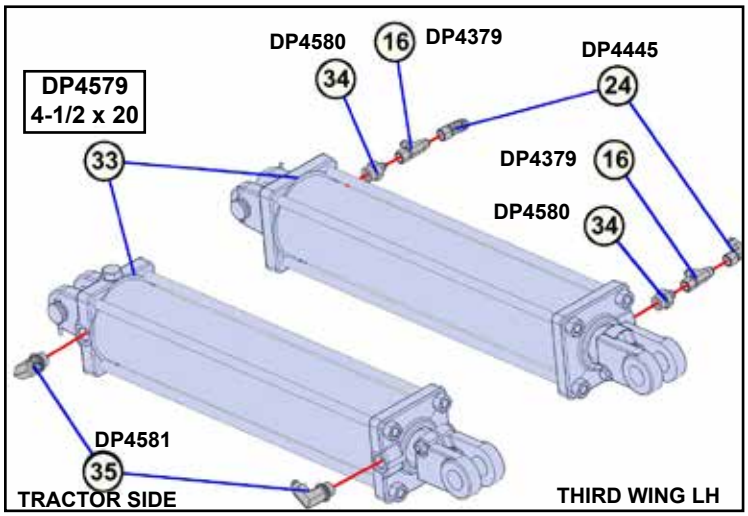

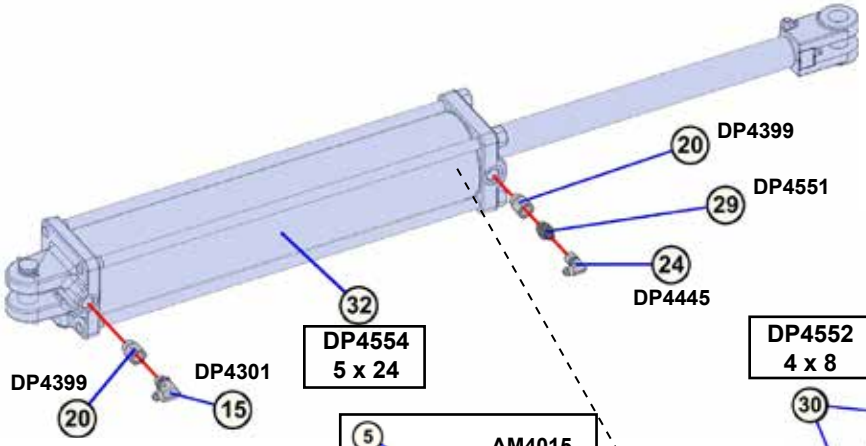

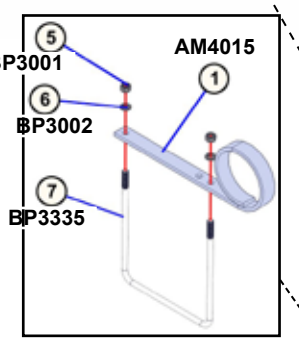

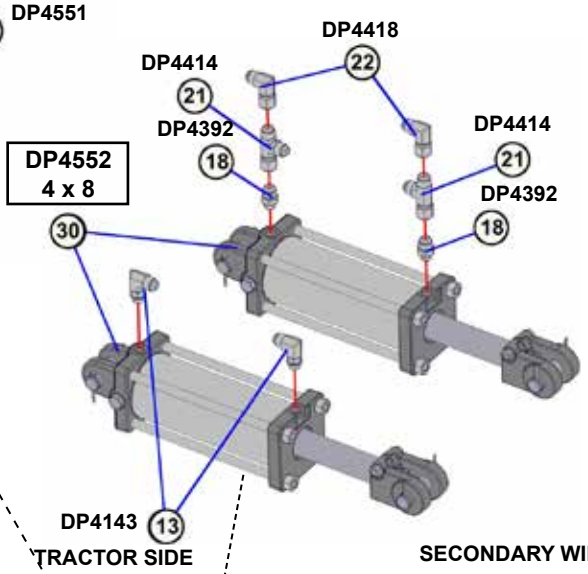

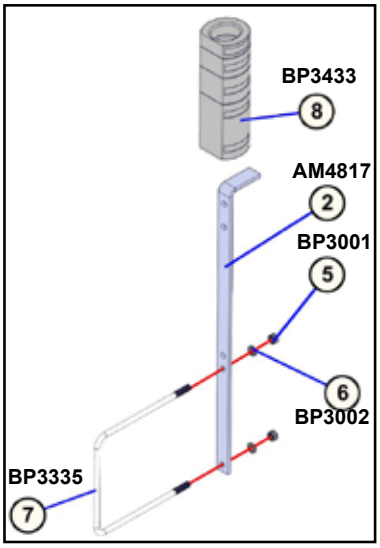

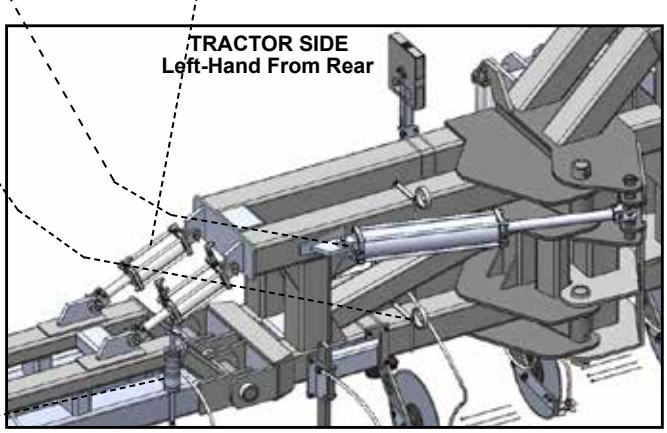

Hydraulic Package Kit (PKG00216) AT7000

AT7000	Task	Procedures	Illustrations

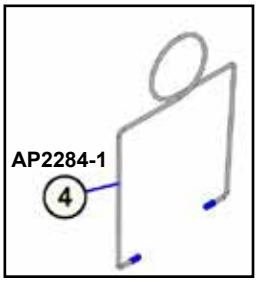

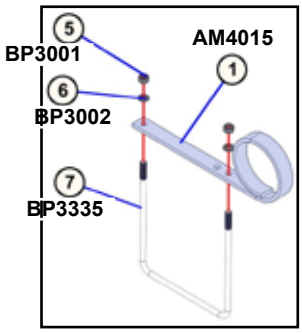

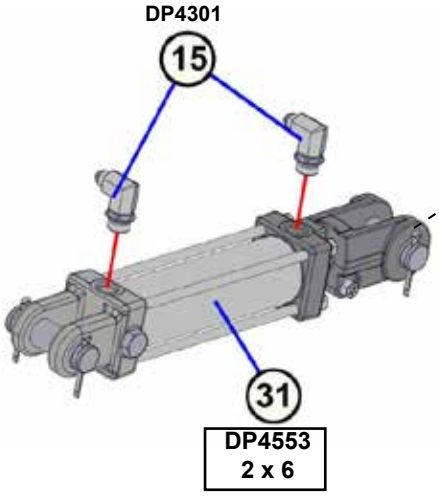

Hydraulic Package Kit (PKG00216) AT7000

AT7000	Task	Procedures	Illustrations

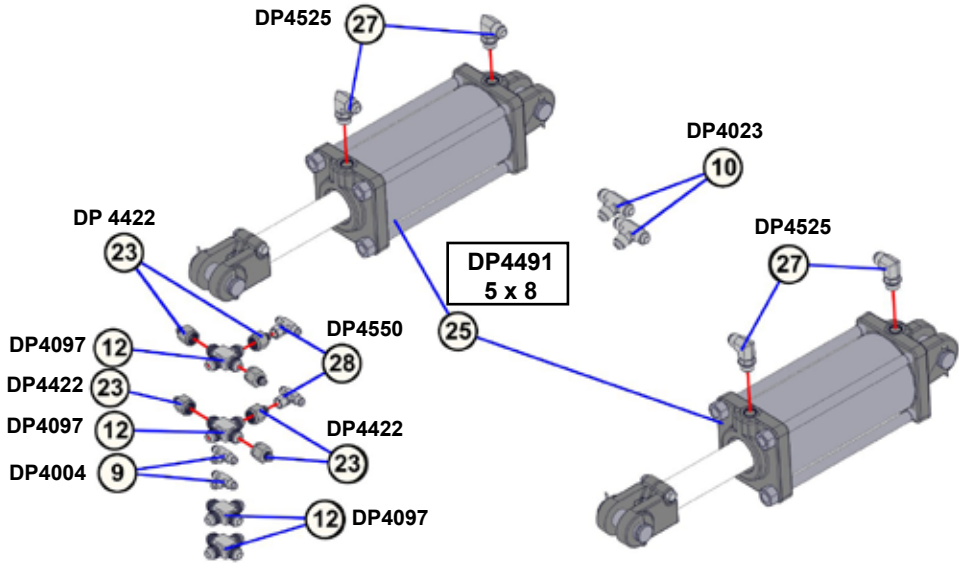

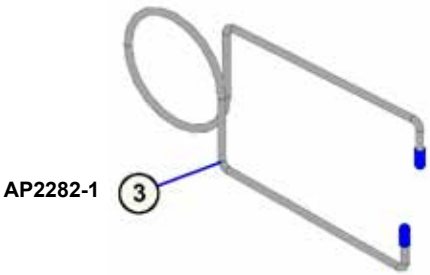

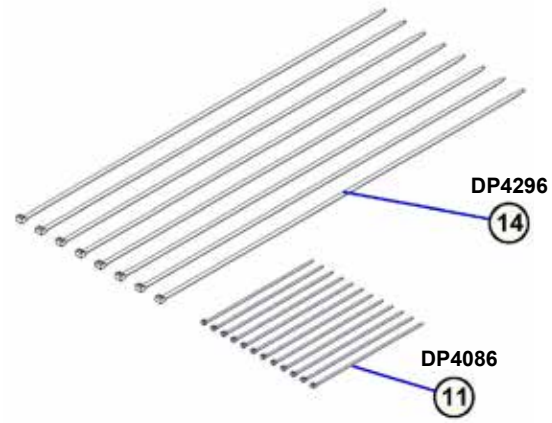

Hydraulic Package Kit (PKG00216) AT7000

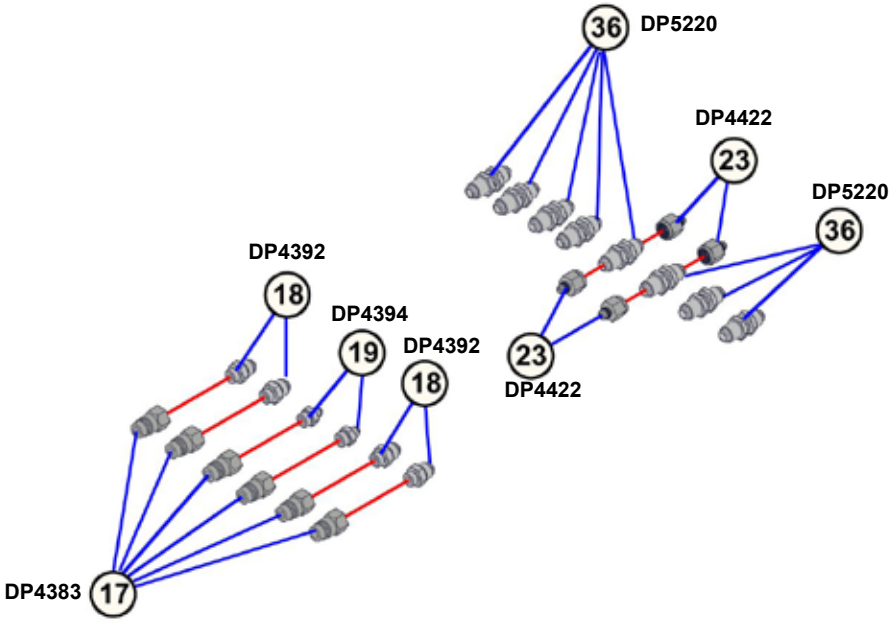

► **DDP1153**

Ref.	Part No.	Req.	Description
a.	DP5018	4	Hose, Hydraulic, 1/4” x 102” (8’6”), 6FJX-6FJX
b.	DP5057	4	Hose, Hydraulic, 1/4” x 36” (3’0”), 6FJX-6FJX
c.	DP5064	8	Hose, Hydraulic, 3/8” x 24” (2’0”), 10FJX-10FJX
d.	DP5067	2	Hose, Hydraulic, 3/8” x 174” (14’6”), 10FJX-10FJX
e.	DP5152	2	Hose, Hydraulic, 1/4” x 84” (7’0”), 6FJX-6FJX
f.	DP5166	2	Hose, Hydraulic, 3/8” x 84” (7’0”), 10FJX-10FJX
g.	DP5185	2	Hose, Hydraulic, 1/2” x 84” (7’0”), 10FJX-10FJX
h.	DP5212	2	Hose, Hydraulic, 1/2” x 62” (5’2”), 10FJX-10FJX
i.	DP5269	2	Hose, Hydraulic, 1/2” x 36” (3’0”), 10FJX-10FJX
j.	DP5283	2	Hose, Hydraulic, 1/4” x 62” (5’2”), 6FJX-6FJX
k.	DP5284	2	Hose, Hydraulic, 1/4” x 136” (11’4”), 6FJX-6FJX
l.	DP5285	2	Hose, Hydraulic, 1/4” x 160” (13’4”), 6FJX-6FJX
m.	DP5286	2	Hose, Hydraulic, 1/4” x 178” (14’10”), 6FJX-6FJX
n.	DP5287	2	Hose, Hydraulic, 1/4” x 335” (27’11”), 6FJX-6FJX
o.	DP5288	2	Hose, Hydraulic, 1/4” x 359” (29’11”), 6FJX-6FJX
p.	DP5289	2	Hose, Hydraulic, 3/8” x 62” (5’2”), 10FJX-10FJX
q.	DP5290	2	Hose, Hydraulic, 3/8” x 162” (13’6”), 10FJX-10FJX

Hydraulic Package Kit (PKG00216) AT7000
Hose Kit DDP1153

AT7000	Task	Procedures	Illustrations

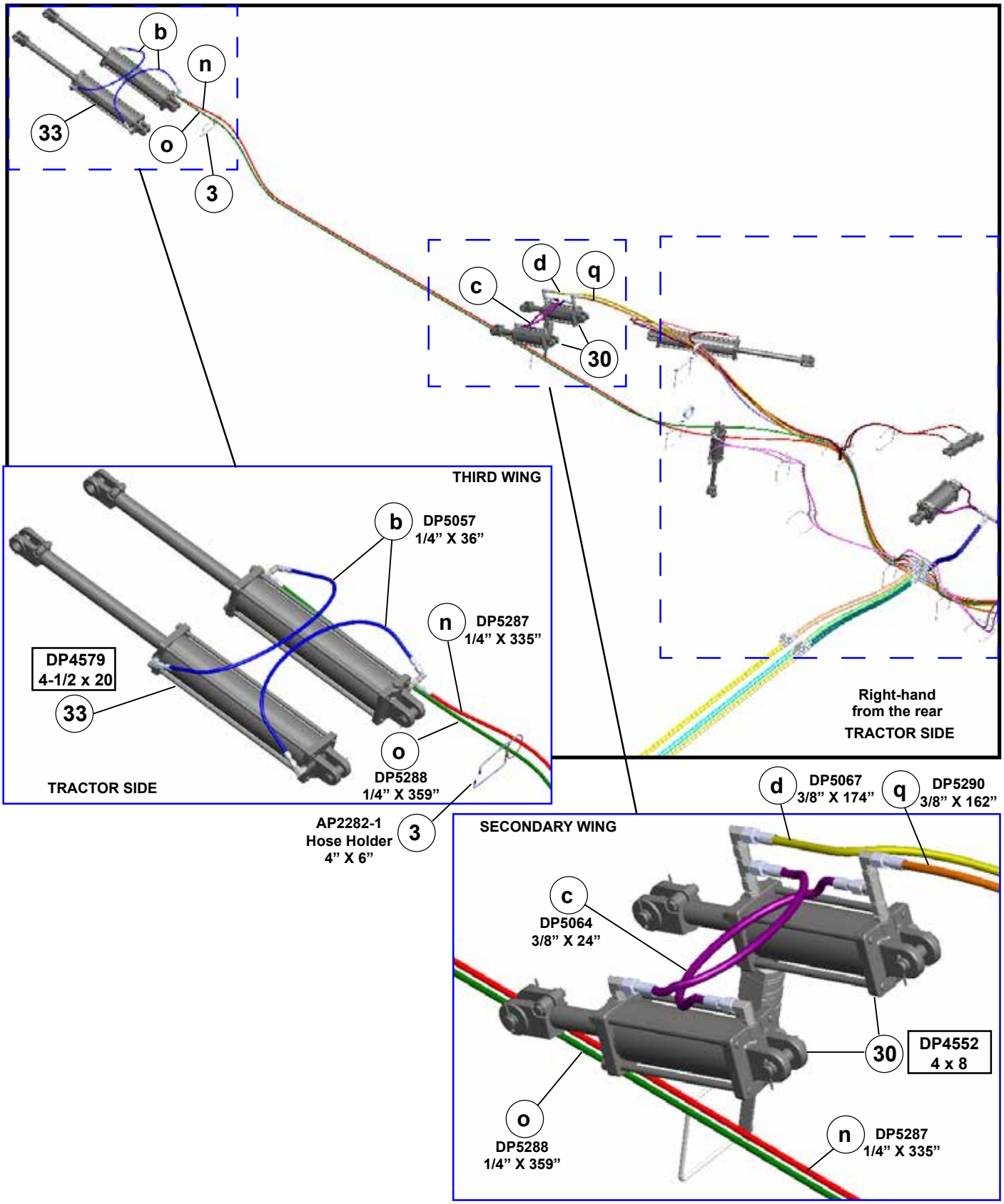

Hydraulic Package Kit (PKG00216) AT7000 Hose Kit DDP1153

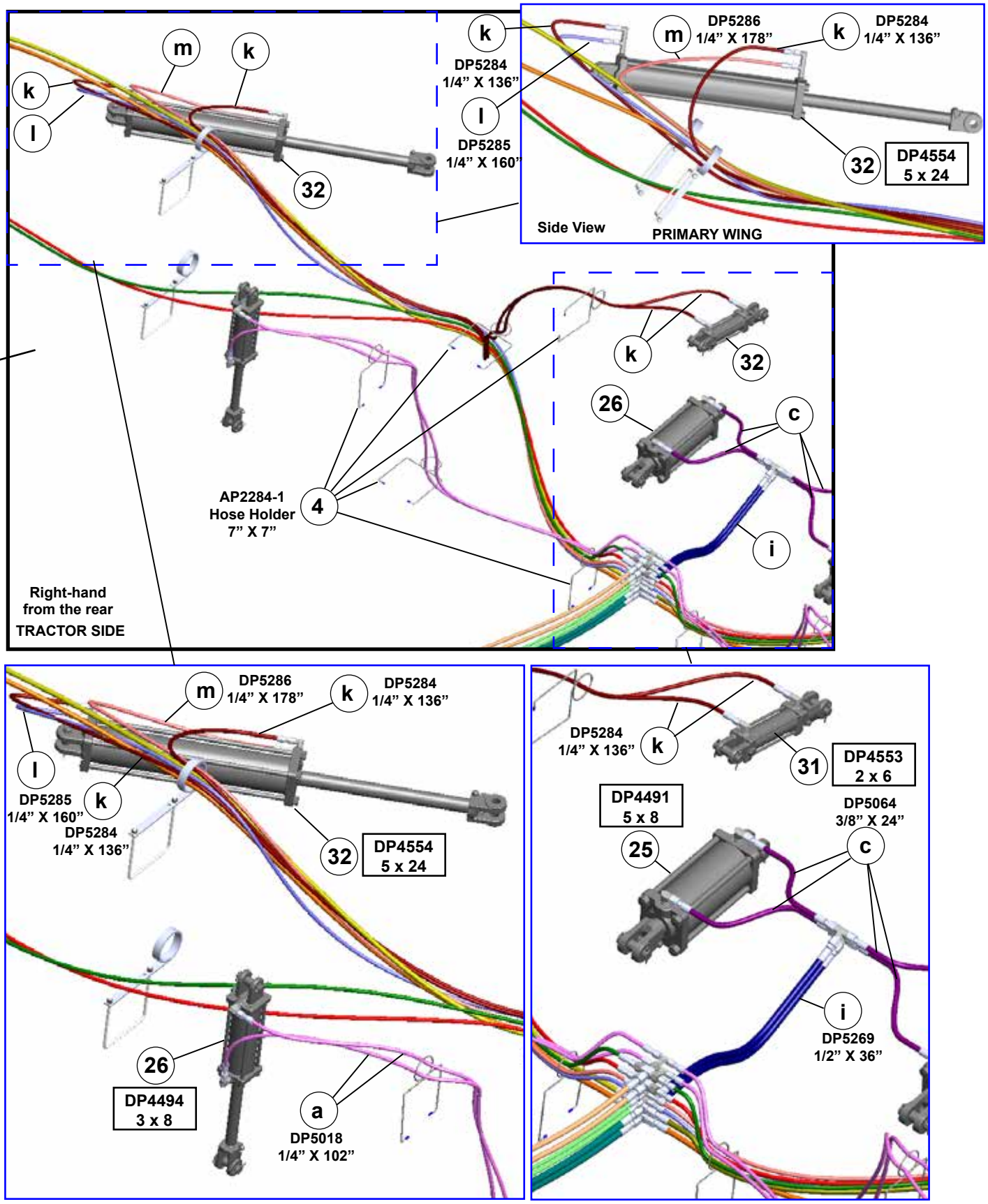

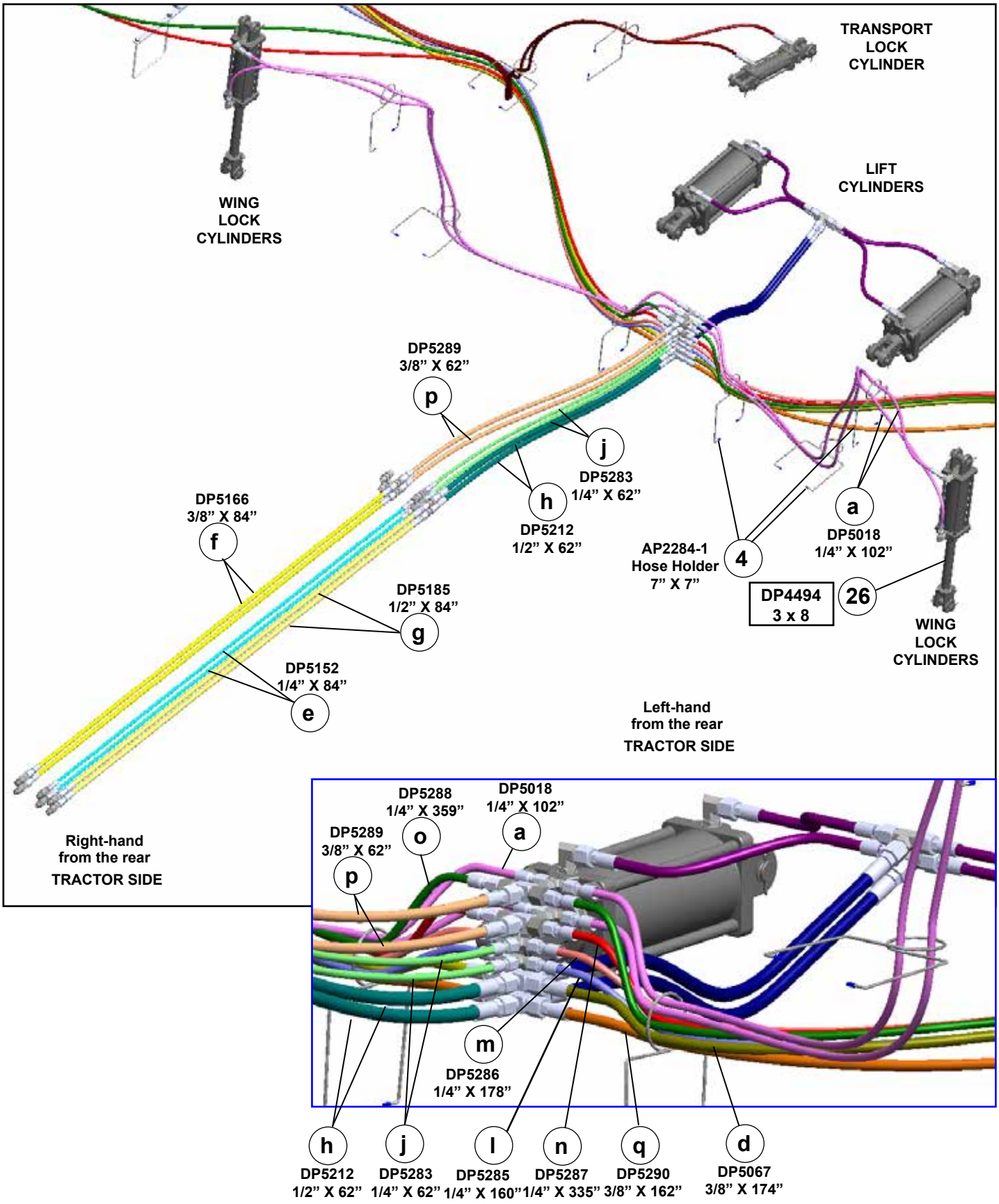
TRANSPORT LOCK CYLINDER
LIFT CYLINDERS
WING LOCK CYLINDERS
DP5289 3/8" X 62"
p
j
DP5283 1/4" X 62"
h
DP5212 1/2" X 62"
DP5166 3/8" X 84"
f
a
DP5018 1/4" X 102"
AP2284-1 Hose Holder 7" X 7"
4
DP4494 3 x 8
26
WING LOCK CYLINDERS
DP5185 1/2" X 84"
g
DP5152 1/4" X 84"
e
Left-hand from the rear
TRACTOR SIDE
Right-hand from the rear
TRACTOR SIDE
DP5288 1/4" X 359"
o
DP5018 1/4" X 102"
a
DP5289 3/8" X 62"
p
m
DP5286 1/4" X 178"
h
DP5212 1/2" X 62"
j
DP5283 1/4" X 62"
l
DP5285 1/4" X 160"
n
DP5287 1/4" X 335"
q
DP5290 3/8" X 162"
d
DP5067 3/8" X 174"

Hydraulic Package Kit (PKG00216) AT7000
Hose Kit DDP1153

AT7000	Task	Procedures	Illustrations

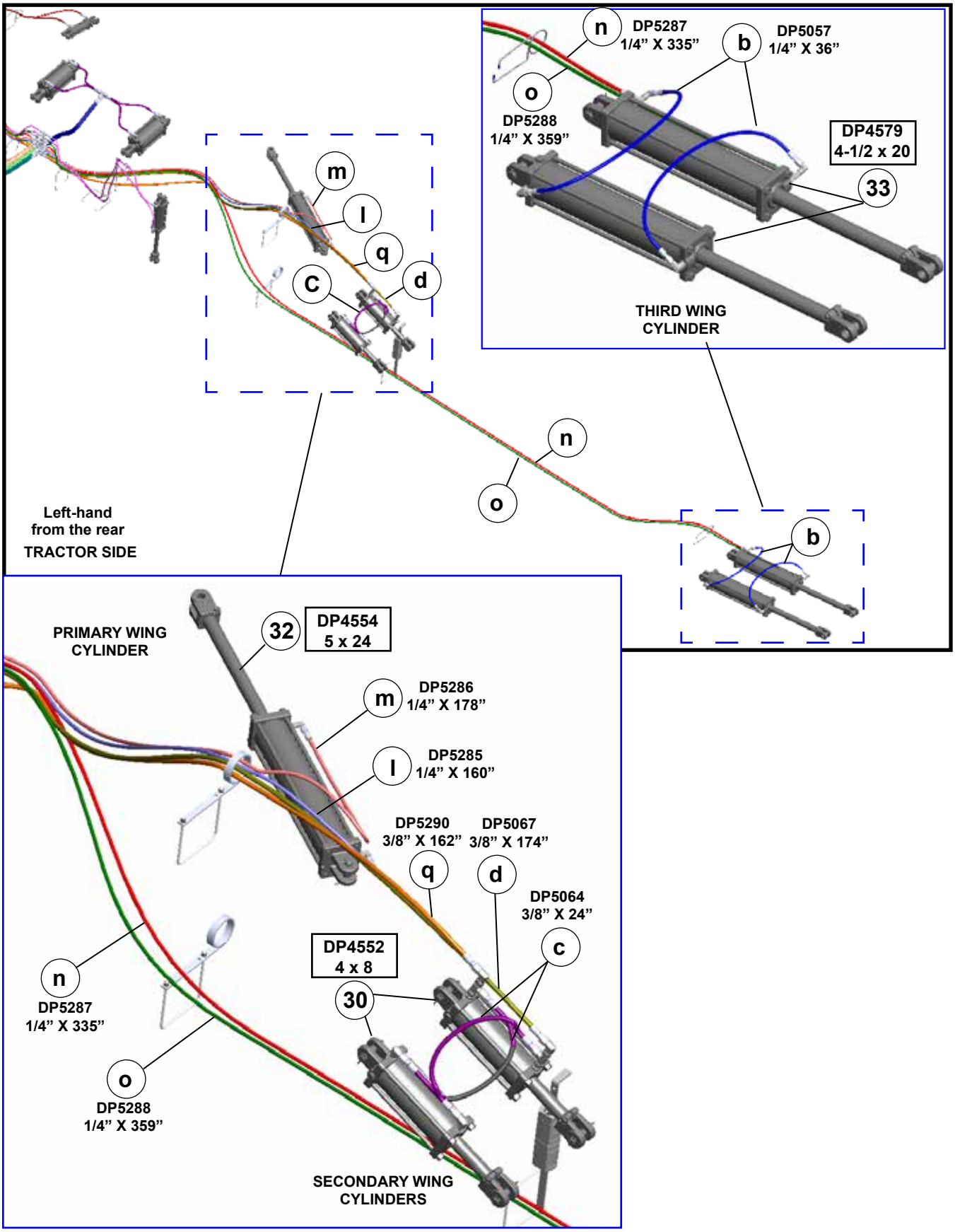

80’ & 90’ Liquid Misc. (PKG00217)

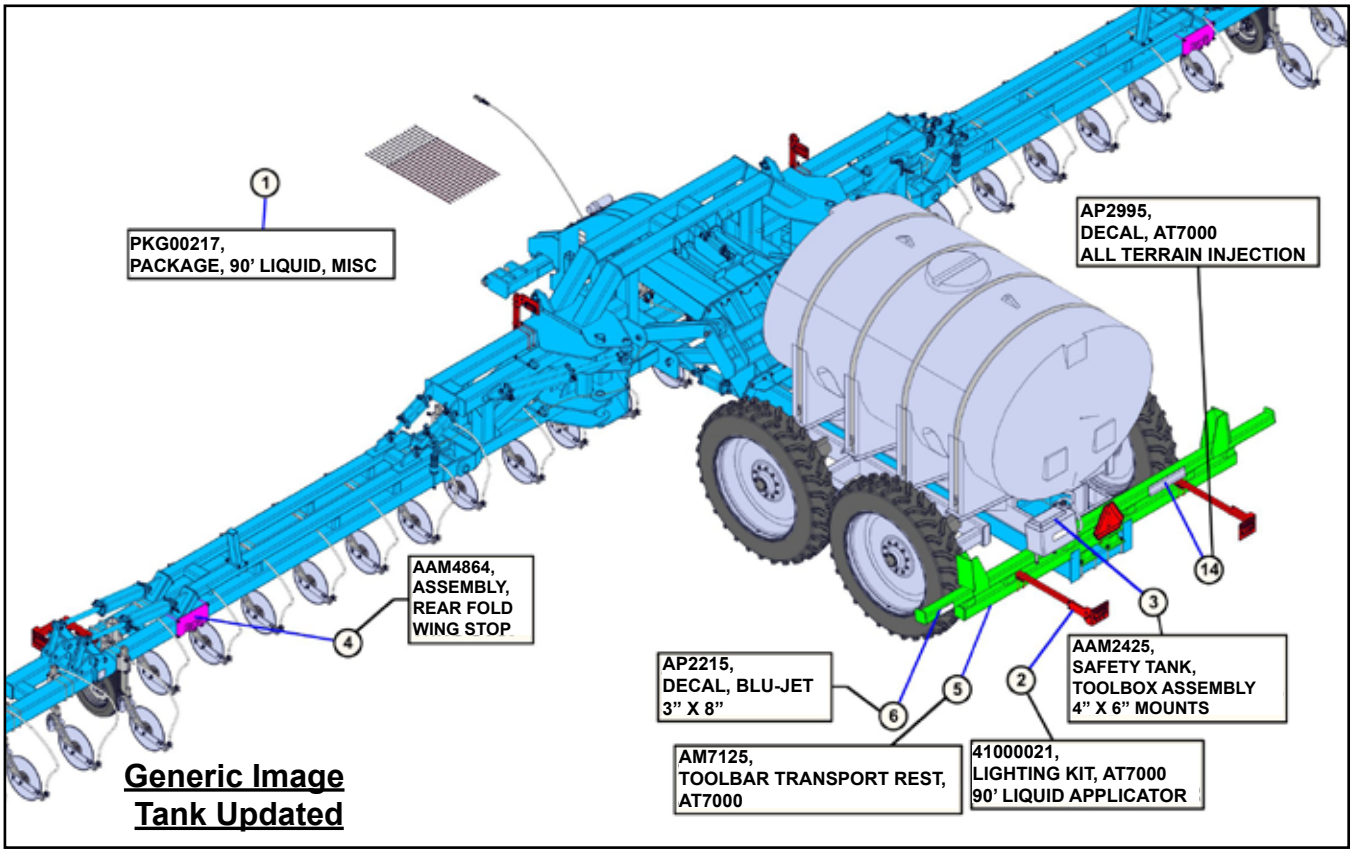

BOM ID	Qty	Item No	Description
1	1	PKG00217	PACKAGE, AT7000, MISC
2	1	41000021	LIGHTING KIT, AT7000
3	1	AAM2425	SAFETY TANK, TOOLBOX ASSEMBLY, 4” X 6” MOUNTS
4	2	AAM4864	ASSEMBLY, REAR FOLD WING STOP
5	1	AM7125	TOOLBAR TRANSPORT REST, AT7000
6	9	AP2215	DECAL, BLU-JET, 3” X 8”
14	3	AP2995	DECAL, AT7000 ALL TERRAIN INJECTION

Rear Fold Wing Stop (AAM4864)

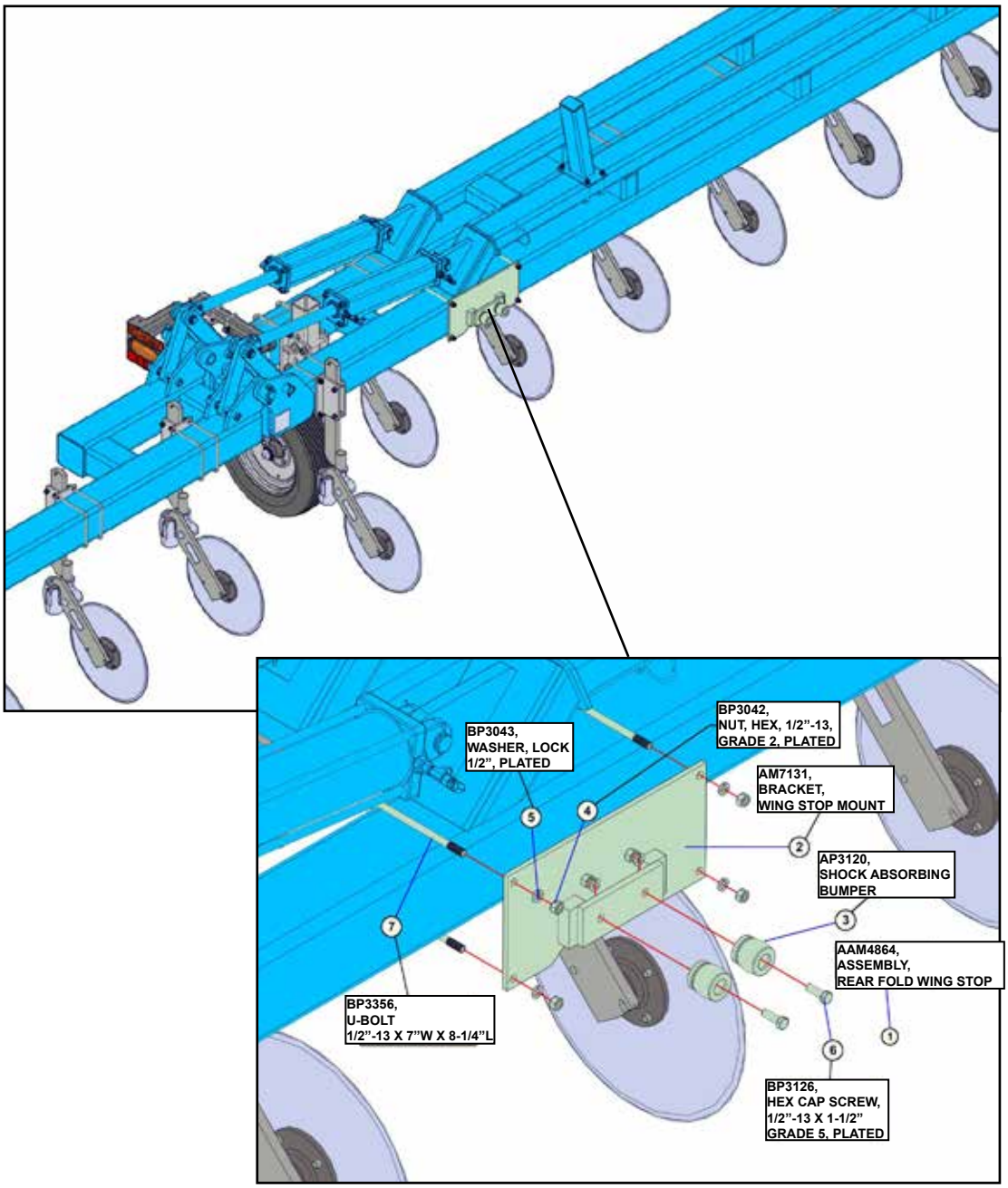

BOM ID	Qty	Item No	Description
1	1	AAM4864	ASSEMBLY, REAR FOLD WING STOP
2	1	AM7131	BRACKET, WING STOP MOUNT
3	2	AP3120	SHOCK ABSORBING BUMPER
4	6	BP3042	NUT, HEX, 1/2"-13, GRADE 2, PLATED
5	6	BP3043	WASHER, LOCK, 1/2", PLATED
6	2	BP3126	HEX CAP SCREW, 1/2"-13 X 1-1/2", GRADE 5, PLATED
7	2	BP3356	U-BOLT, 1/2"-13 X 7"W X 8-1/4"L, GLOSS BLACK

BLU-JET	Toolbar Transport Rest (PKG00217)		
AT7000	Task	Procedures	Illustrations

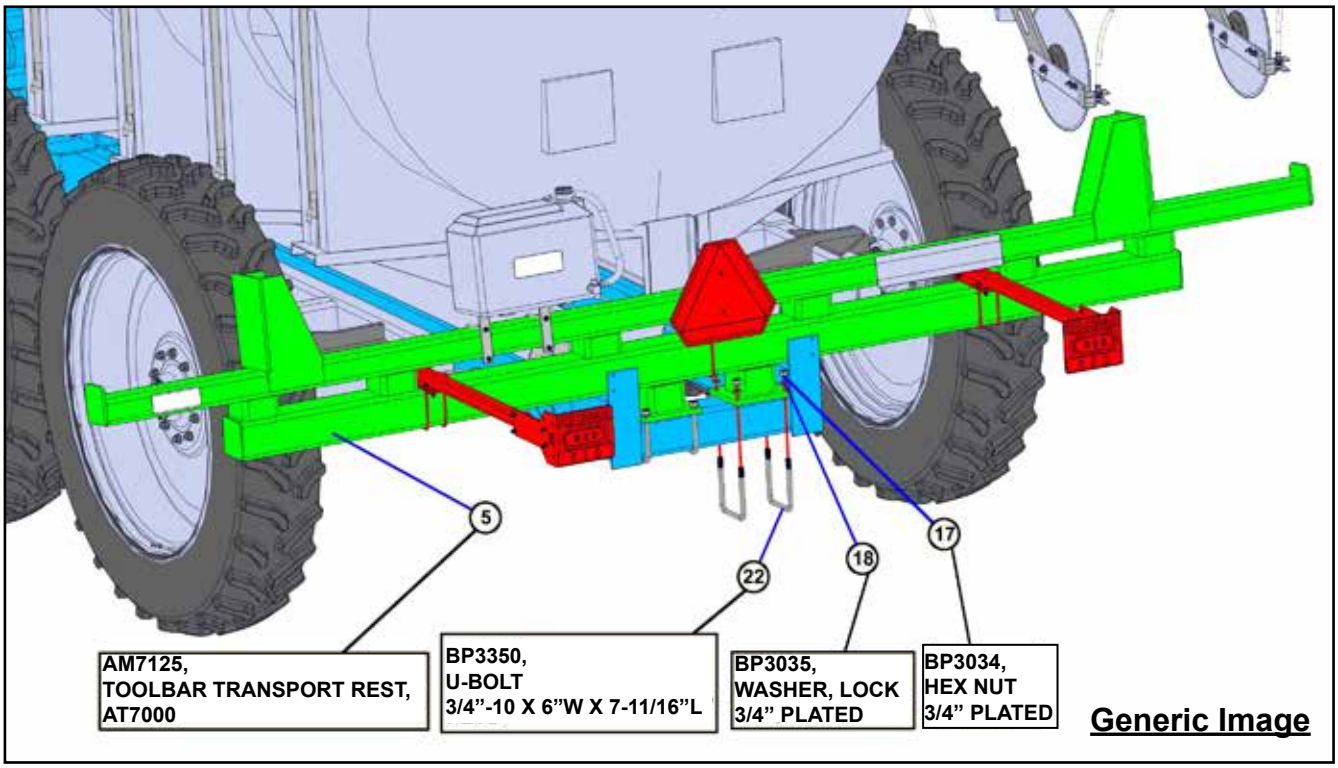

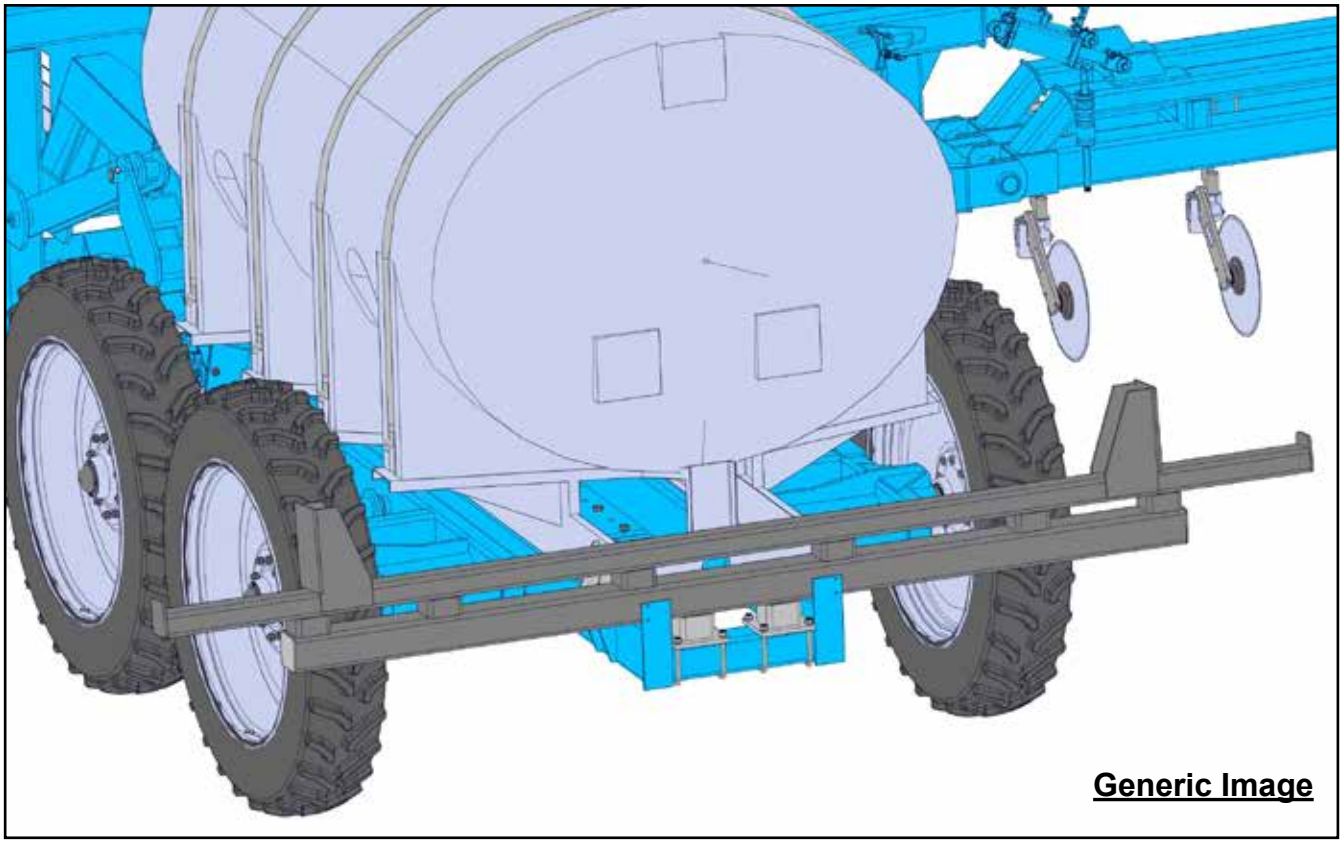

Safety Tank Toolbox (AAM2425) (PKG00217)

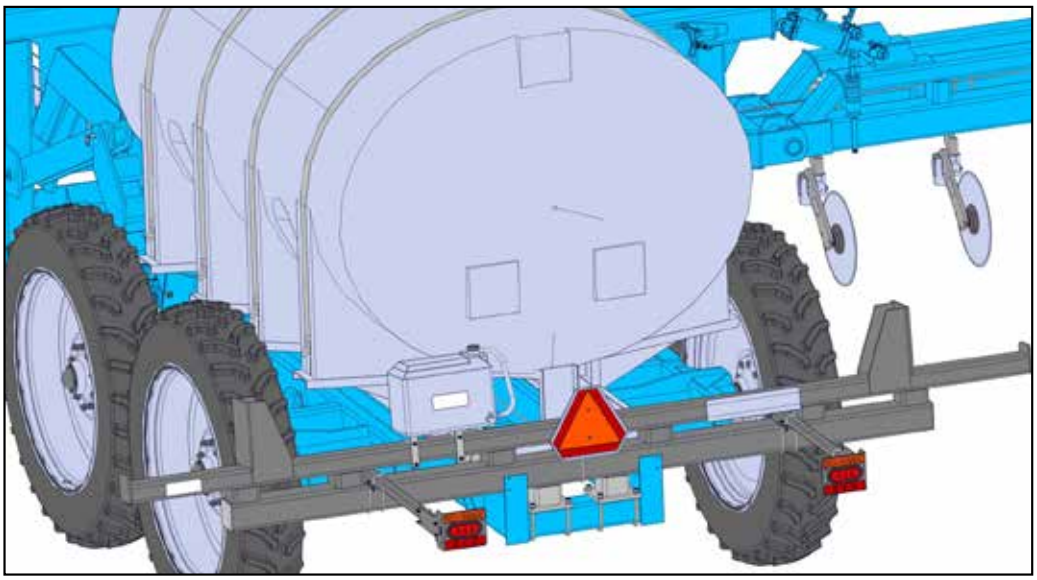

BOM ID	Qty	Item No	Description
1	1	AP2215	DECAL, BLU-JET, 3” X 8”
2	2	BP3214	U-BOLT, 3/8”-16 X 4”W X 7”L
3	1	PKG00040	PACKAGE, 9 GALLON SAFETY TANK
3A	2	AM2136	BRACKET, TANK MOUNT
3B	1	AP2137	SAFETY TANK, 9 GALLON
3BA	1	AP2137HOSE	3/4” CLEAR HOSE - CP2069 - 24” LENGTH
3BB	1	AP2137LID	TOOLBOX LID
3BC	1	AP2137TANK	TANK
3BD	1	AP2272	2” FILL CAP
3BE	1	AP2329	SPIGOT
3BF	1	CP2471	ELBOW, 90 DEGREE, 3/4”MP X 3/4” HB POLY
3BG	1	CP2577	HOSE BARB, 3/4”MP X 3/4” HB, POLY
3C	4	BP3001	NUT, HEX, 3/8”-16, GRADE 2, PLATED
3D	4	BP3002	WASHER, LOCK, 3/8”, PLATED
3E	6	BP3108	HEX CAP SCREW, 5/16”-18 X 1”, GRADE 5, PLATED
3F	6	BP3158	WASHER, LOCK, 5/16”, PLATED
3G	6	BP3159	WASHER, FLAT, 5/16”, PLATED

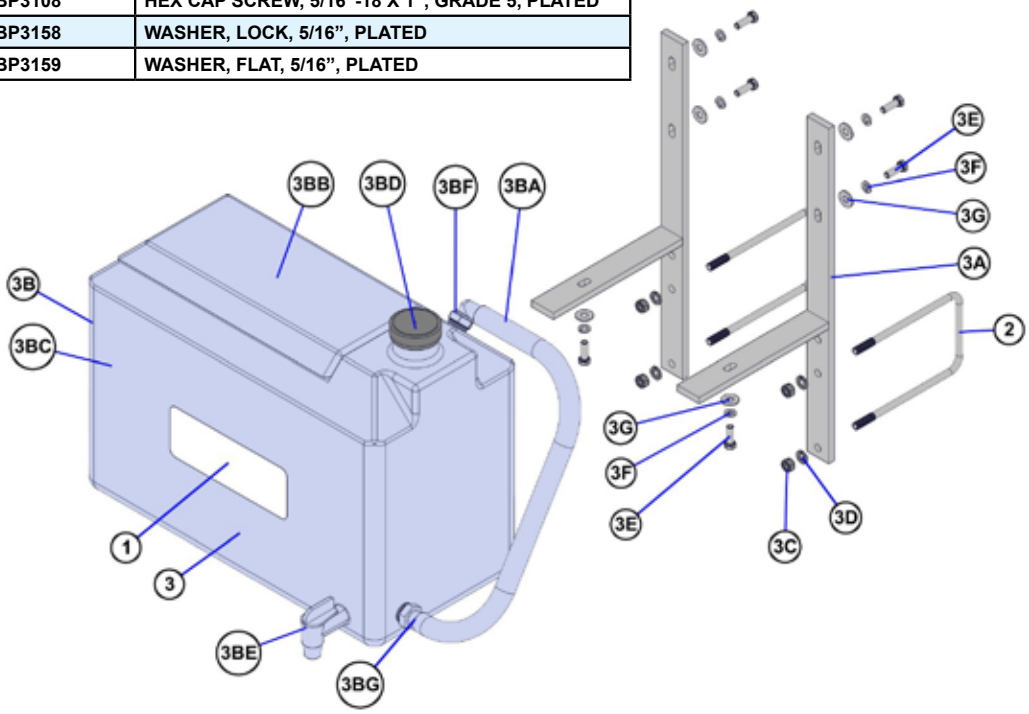

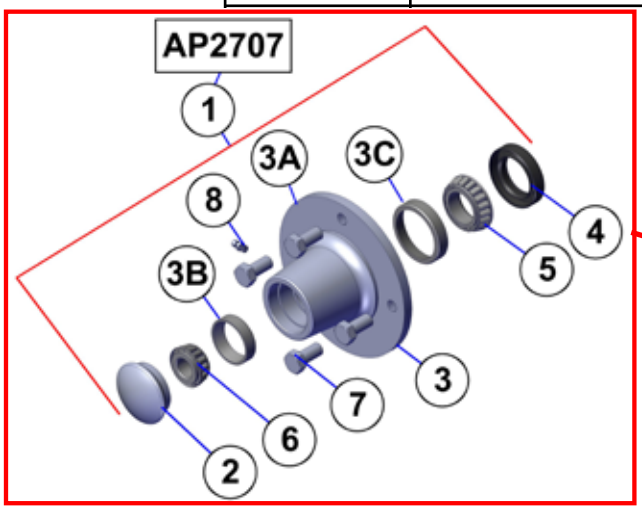

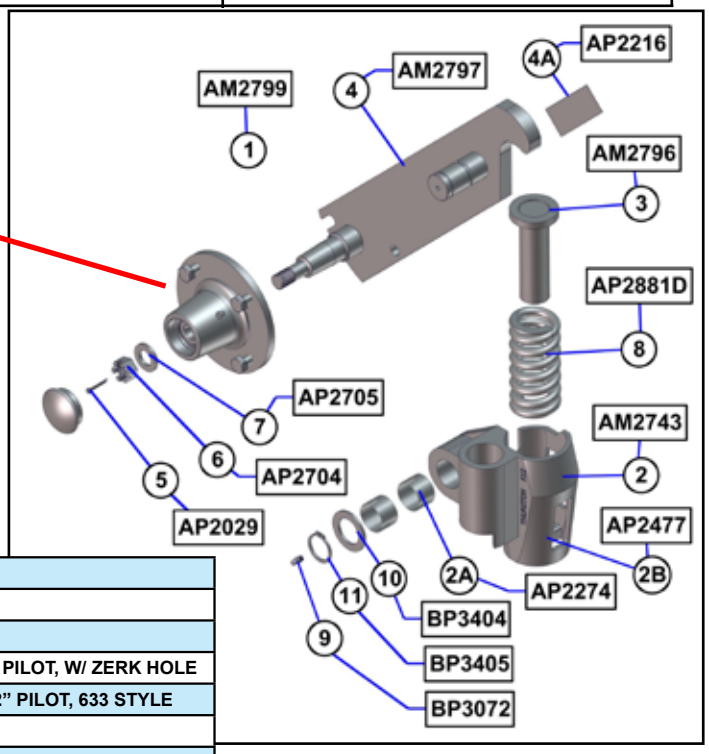

AP2707, HUB ASSEMBLY, 4 BOLT

BOM ID	Qty	Item No	Description
1	1	AP2707	HUB ASSEMBLY, 4 BOLT
2	1	AP2703	HUB CAP, 1610
3	1	AP2706-1	HUB W/ CUPS, 4 BOLT, 5” BC, 3.62” PILOT, W/ ZERK HOLE
3A	1	AP2706-1HUB	HUB W/O CUPS, 4 BOLT, 5” BC, 3.62” PILOT, 633 STYLE
3B	1	AP2075	BEARING CUP, LM 11910
3C	1	AP2524	BEARING CUP, LM 67010
4	1	AP2747	GREASE SEAL, 15235TB
5	1	AP2023	BEARING CONE, LM 67048
6	1	AP2024	BEARING CONE, LM 11949
7	4	AP2702	HEX CAP SCREW, 1/2”-20 X 1”, GRADE 5, PLATED
8	1	BP3072	GREASE ZERK, 1/4”-28

AP2799, ASSEMBLY, COULTER ARM WITH HUB & KNEE CASTING, HD

BOM ID	Qty	Item No	Description
1	1	AM2799	ASSEMBLY, COULTER ARM WITH HUB & KNEE CASTING, HD
2	1	AM2743	CASTING, COULTER KNEE, HD, MACHINED WITH BUSHINGS
2A	2	AP2274	BUSHING, 1-17/32” OD X 1-3/8” ID” X 1” OAL
2B	1	AP2477-1	CASTING, COULTER KNEE, MACHINED
3	1	AM2796	SPRING CAP & GUIDE, HD COULTER
4	1	AM2797	COULTER ARM, HD
4A	1	AP2216	DECAL, BLU-JET, SMALL, 1-1/2” X 4”
5	1	AP2029	PIN, COTTER, 5/32” X 1-1/2”
6	1	AP2704	NUT, SPINDLE, 3/4”-16
7	1	AP2705	WASHER, SPINDLE, 1-1/2” X 13/16” X .134”
8	1	AP2881D	SPRING, 2.472” OD X 5.875” OAL, .468 WIRE DIAMETER
9	1	BP3072	GREASE ZERK, 1/4”-28
10	1	BP3404	MACHINERY BUSHING, 2-1/8” OD X 1-3/8” ID X 10 GAUGE, PLATED
11	1	BP3405	SNAP RING, 1-3/8” EXTERNAL, 5160-137

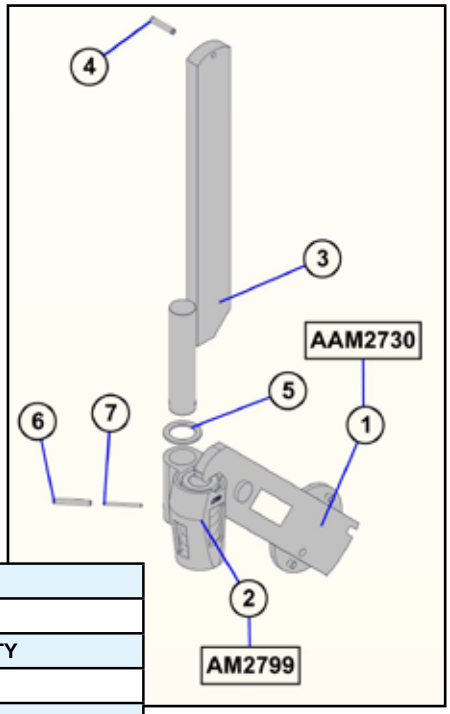

AAM2730 COULTER, SUPER 1200, 23, 1 ROW

BOM ID	Qty	Item No	Description
1	1	AAM2730	COULTER, SUPER 1200, 23” SHANK, 1 ROW
2	1	AM2799	COULTER ARM WITH HUB & KNEE CASTING, HEAVY DUTY
3	1	AM4424	COULTER SHANK, 23”
4	1	BP3162	PIN, ROLL, 3/8” X 2”, PLATED
5	1	BP3466	MACHINERY BUSHING, 2-1/2” X 1-3/4”X 10 GAUGE, STAINLESS STEEL
6	1	BP3519	PIN, ROLL, 3/8” X 2-1/2”
7	1	BP3534	PIN, ROLL, 7/32” X 2-1/2”

► AAM2821 Coulter, Flatback Centered Assembly, 7” x 7”

BOM ID	Qty	Item No	Description
1	1	AM4425	BRACKET, FLATBACK, 7”X 7”, CENTERED
2	6	BP3042	NUT, HEX, 1/2”-13, GRADE 2, PLATED
3	6	BP3043	WASHER, LOCK, 1/2”, PLATED
4	2	BP3229	BOLT, CARRIAGE, 1/2”-13 X 2-1/2”, GRADE 5, PLATED
5	2	BP3356	U-BOLT, 1/2”-13 X 7”W X 8-1/4”L, GLOSS BLACK

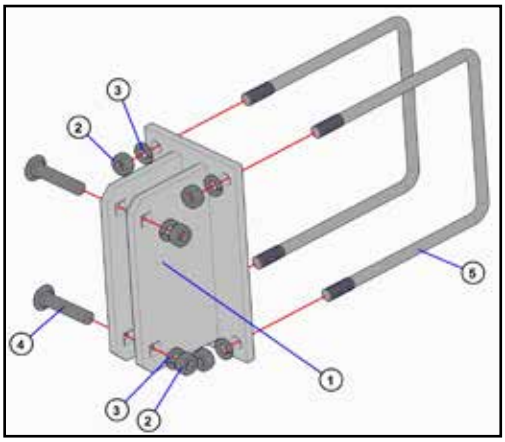

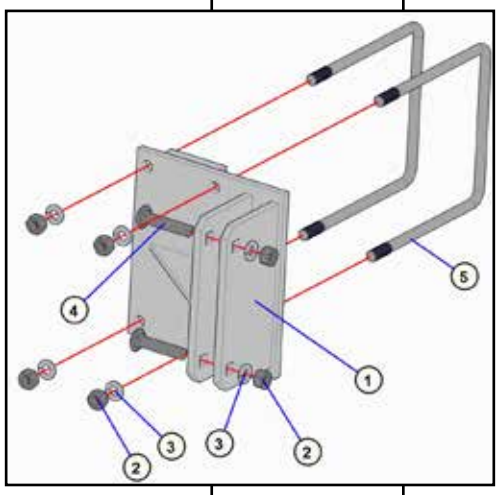

► AAM2822 Flatback Coulter, Offset

BOM ID	Qty	Item No	Description
1	1	AM4435	BRACKET, FLATBACK, 7”X 7”, OFFSET
2	6	BP3042	NUT, HEX, 1/2”-13, GRADE 2, PLATED
3	6	BP3043	WASHER, LOCK, 1/2”, PLATED
4	2	BP3229	BOLT, CARRIAGE, 1/2”-13 X 2-1/2”, GRADE 5, PLATED
5	2	BP3356	U-BOLT, 1/2”-13 X 7”W X 8-1/4”L, GLOSS BLACK

► AAM2646 Flatback Coulter Assembly

BOM ID	Qty	Item No	Description
1	1	AAM2646	COULTER, FLATBACK CENTERED, WITH BOLTS
2	1	AM4425	BRACKET, FLATBACK, 7”X 7”, CENTERED
3	5	BP3042	NUT, HEX, 1/2”-13, GRADE 2, PLATED
4	6	BP3043	WASHER, LOCK, 1/2”, PLATED
5	4	BP3459	HEX CAP SCREW, 1/2”-13 X 2”, F593 GRADE 1,
6	2	BP3229	BOLT, CARRIAGE, 1/2”-13 X 2-1/2”, GRADE 5, PLATED

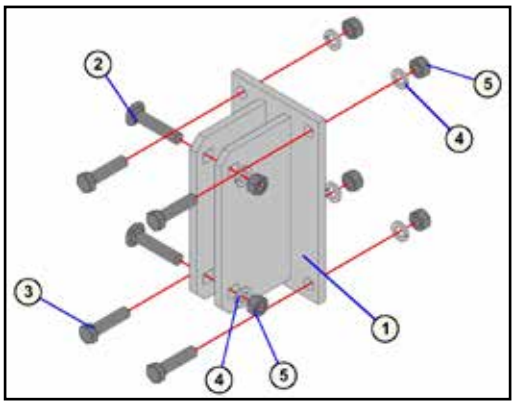

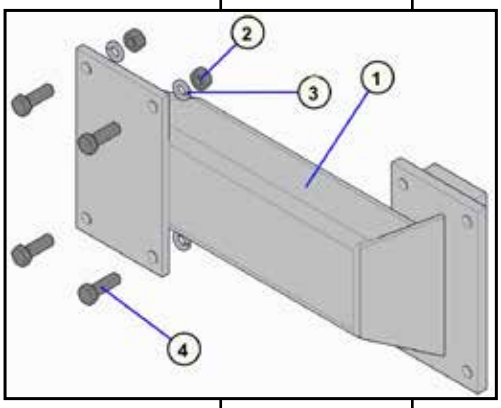

► AAM2721 Bracket Offset

BOM ID	Qty	Item No	Description
1	1	AM3640	BRACKET, OFFSET, 15” X 4”, FOR 7” X 7” FLATBACK
2	4	BP3042	NUT, HEX, 1/2”-13, GRADE 2, PLATED
3	4	BP3043	WASHER, LOCK, 1/2”, PLATED
4	4	BP3126	HEX CAP SCREW, 1/2”-13 X 1-1/2”, GRADE 5, PLATED

Vertical Pin Adjust Gauge Wheel, 25 x 7.50-15 Tire (40600103)

AT7000	Task	Procedures	Illustrations

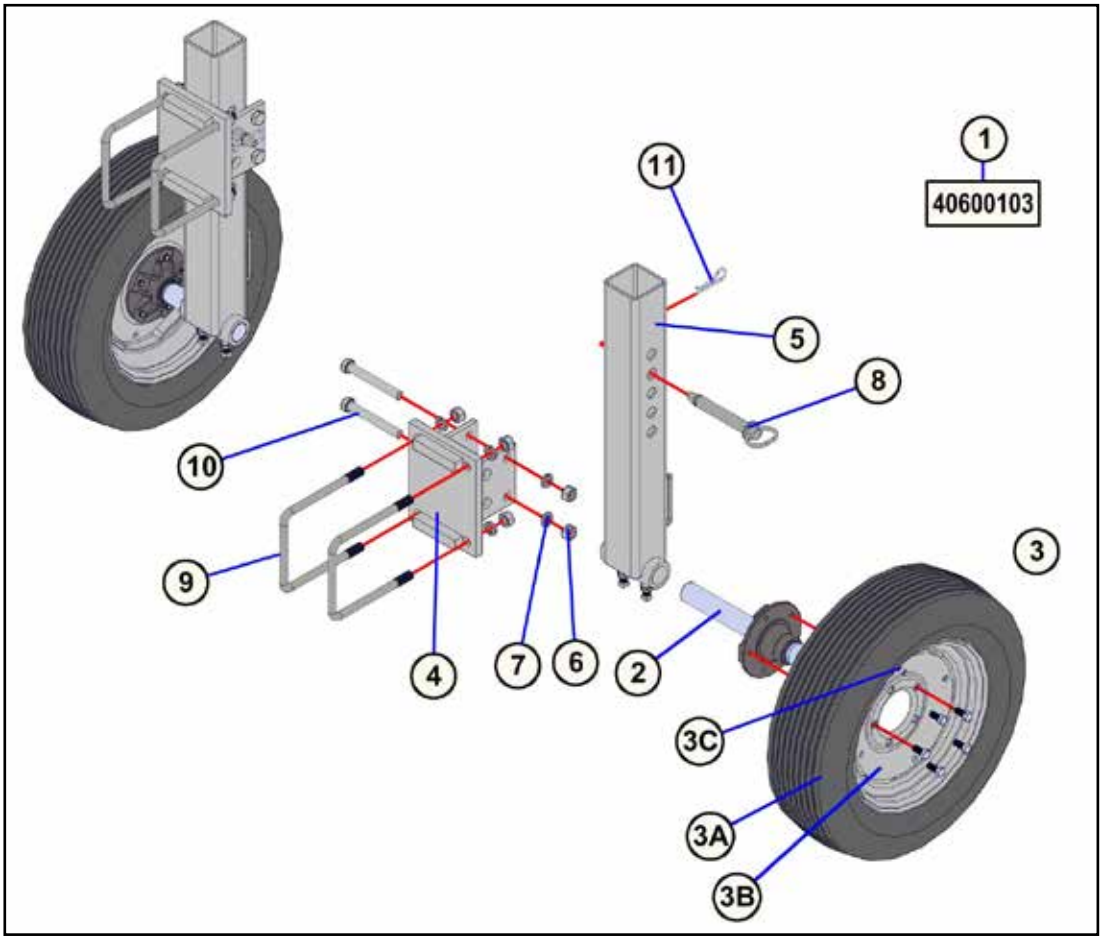

BOM ID	Qty	Item No	Description
1	1	40600103	VERTICAL PIN ADJUST GAUGE WHEEL
2	2	AAM2707	ASSEMBLY, HUB & SPINDLE, 511 HUB, 1-3/4” X 13” SPINDLE
3	2	AAM2758	WHEEL, 25 X 7.50-15, 4 PLY, 15 X 5 X 5, WHITE
3A	2	AP2017	TIRE, 25 X 7.50-15, 6 PLY, TERRA RIB
3B	2	AP2250	RIM, 15 X 5 X 5, WHITE
3C	2	AP2790	VALVE STEM, METAL
4	2	AM7519	BRACKET, GAUGE WHEEL MOUNT
5	2	AM7520	GAUGE WHEEL LEG
6	12	BP3034	NUT, HEX, 3/4”-10, GRADE 2, PLATED
7	12	BP3035	WASHER, LOCK, 3/4”, PLATED
8	2	BP3051	PIN, 1” X 6”, PLATED
9	4	BP3058	U-BOLT, 3/4”-10 X 7”W X 9”L
10	4	BP3146	HEX CAP SCREW, 3/4”-10 X 6”, GRADE 5, PLATED
11	2	BP3500	PIN, HAIR CLIP, 3/16”

AAM2707 Hub and Spindle Assembly
511 Hub, 1-3/4” x 13” Spindle

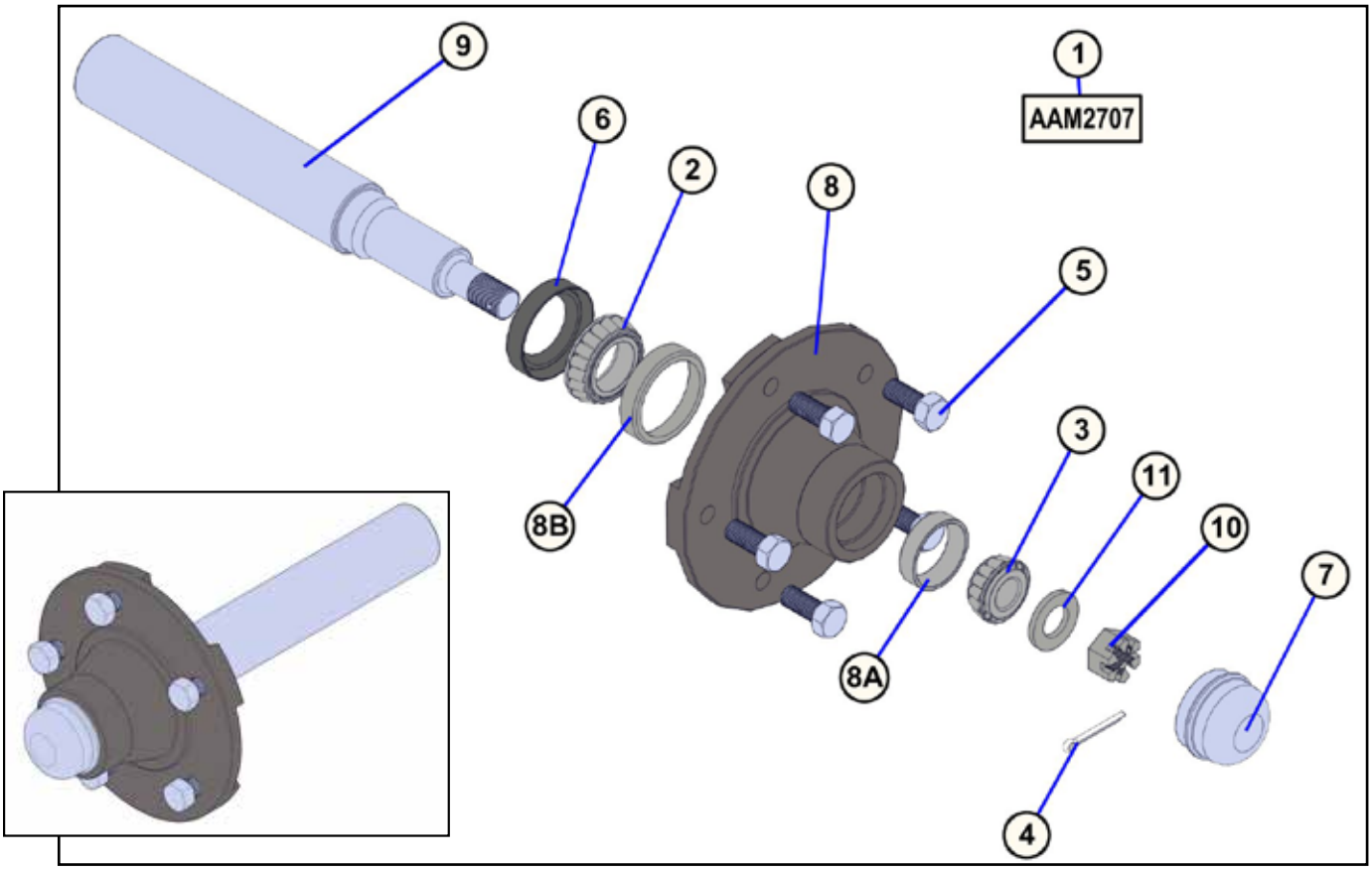

► AAM2707, 511 HUB, 1-3/4” X 13” SPINDLE ASSEMBLY

BOM ID	Qty	Item No	Description
1	1	AP2023	BEARING CONE, LM 67048
2	1	AP2024	BEARING CONE, LM 11949
3	1	AP2029	PIN, COTTER, 5/32” X 1-1/2”
4	5	AP2049	WHEEL BOLT, 1/2”-20 X 1”
5	1	AP2052	GREASE SEAL, CR 14974
6	1	AP2053	HUB CAP, 1524
7	1	AP2124	HUB WITH CUPS, 5 BOLT, 511300-5
7A	1	AP2075	BEARING CUP, LM 11910
7B	1	HUB	HUB, 5 BOLT, 5.5” BOLT CIRCLE, 4” PILOT
7C	1	AP2524	BEARING CUP, LM 67010
8	1	AP2169	SPINDLE, 1-3/4” X 13”, S7151-H-00
9	1	AP2704	NUT, SPINDLE, 3/4”-16
10	1	AP2705	WASHER, SPINDLE, 1-1/2” X 13/16” X .134”

Gauge Wheel Set (33000112)

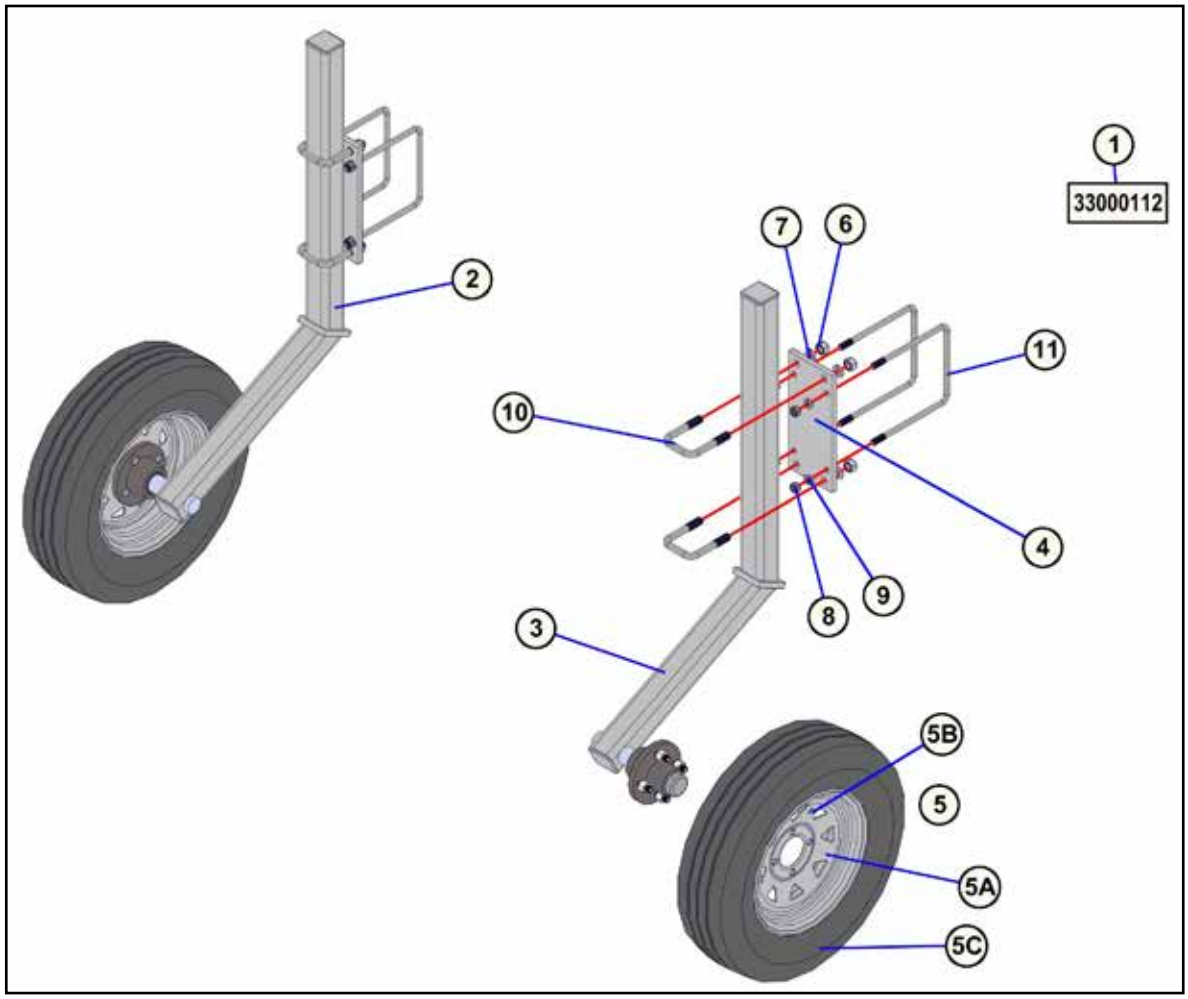

BOM ID	Qty	Item No	Description
1	1	33000112	GAUGE WHEEL, AT GULL TOOLBAR
2	1	AM3548	ASSEMBLY, GAUGE WHEEL, RIGHT HAND
3	1	AM3546	ASSEMBLY, GAUGE WHEEL, LEFT HAND
4	2	AM3626	GAUGE WHEEL MOUNT
5	2	AP4240	WHEEL, 155/80R12, 12 X 4 X 4, 4” BOLT CIRCLE
5A	2	AP2374	RIM, 12 X 4 X 4, WHITE, 12440
5B	2	AP2790	VALVE STEM, METAL
5C	2	AP4241	TIRE, P155/80R12
6	8	BP3038	NUT, HEX, 5/8”-11, GRADE 2
7	8	BP3039	WASHER, LOCK, 5/8”, PLATED
8	8	BP3042	NUT, HEX, 1/2”-13, GRADE 2, PLATED
9	8	BP3043	WASHER, LOCK, 1/2”, PLATED
10	4	BP3300	U-BOLT, 5/8”-11 X 2-1/2” X 4”, PLATED
11	4	BP3356	U-BOLT, 1/2”-13 X 7”W X 8-1/4”L, GLOSS BLACK

Gauge Wheel Hub and Spindle Assemblies

▶ AM3546
AM3548

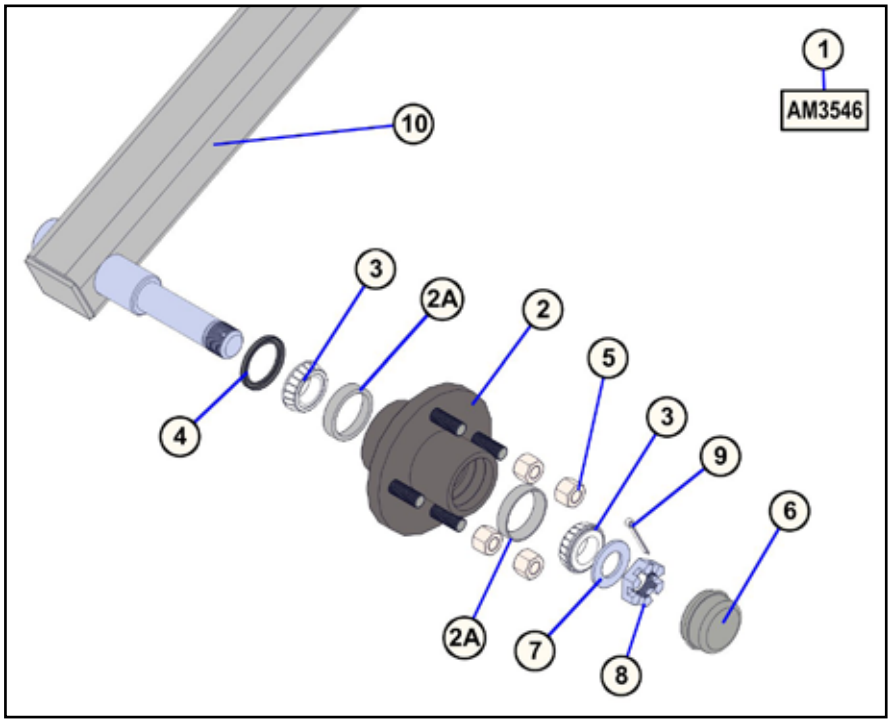

BOM ID	Qty	Item No	Description
1	1	AM3546	ASSEMBLY, GAUGE WHEEL, LEFT HAND
2	1	AP2375	HUB, 4 BOLT, 4” BOLT CIRCLE, WITH CUPS & STUDS
2A	2	AP2376	BEARING CUP, L44610
3	2	AP2377	BEARING CONE, L44649
4	1	AP2378	GREASE SEAL, 15191VB
5	4	AP2379	WHEEL NUT, 1/2”-20
6	1	AP2380	HUB CAP
7	1	AP2381	WASHER, SPINDLE, 1-3/4” X 1” X .125”
8	1	AP2387	NUT, SPINDLE, 1”-14
9	1	AP2426	PIN, COTTER, 5/32” X 1-3/4”
10	1	EM7215	GAUGE WHEEL LEG, LEFT HAND, AT LIQUID TOOLBAR

AM3546 Left-hand

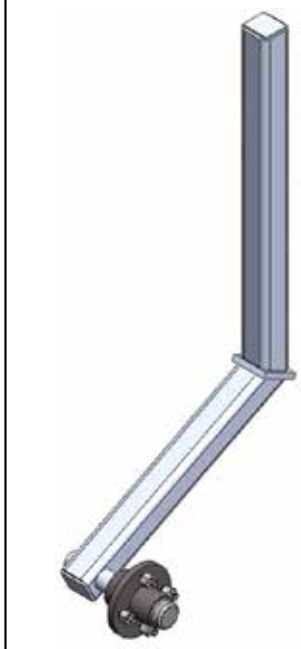

AM3548
Right-hand

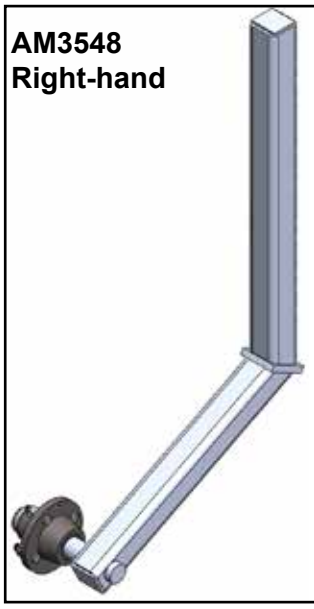

Manual Number: 0607090
41000021 Lighting Kit, AT7000
AAM2427 Safety Tank, Toolbox

Ref.	Part No.	Req.	Description
1.	AM7125	1	Tool bar transport rest, AT7000
2.	AM2215	9	Decal, BLU-JET, 3” x 8”
3.	AP2231	1	Decal, FEMA, 2-1/2” x 1-1/2”
4.	AP2234	4	Decal, Danger Stand Clear Falling Wing
5.	AP2483	1	Decal, Danger Falling From Equipment
6.	AP2552	1	Decal, Caution, Non-Braked Implement
7.	AP2553	1	Decal,Caution, Hydraulics In Float
8.	AP2688	1	Paint, spray can, Blue, 12 oz.
9.	AP2693	1	Paint, spray can, Black, 12 oz.
10.	AP2914	1	Decal, Warning, High Pressure Fluid
11.	AP2969	2	Decal, Warning, Pinch Point, 2-1/2” x 4”
12.	AP2995	3	Decal, AT7000 All Terrain Injection
13.	AP2998	2	Decal, Hose ID
14.	AP4254	1	Manual holder, Black, 01-315
15.	BP3034	8	Nut, hex, 3/4”-10, grade 2, plated
16.	BP3108	2	Hex cap screw, 5/16”-18 x 1”, grade 5, plated
17.	BP3157	2	Nut, hex, 5/16”-18, grade 2, plated
18.	BP3158	2	Washer, lock, 5/16”, plated
19.	BP3350	4	U-bolt, 3/4”-10 x 6” x 7-7/16”

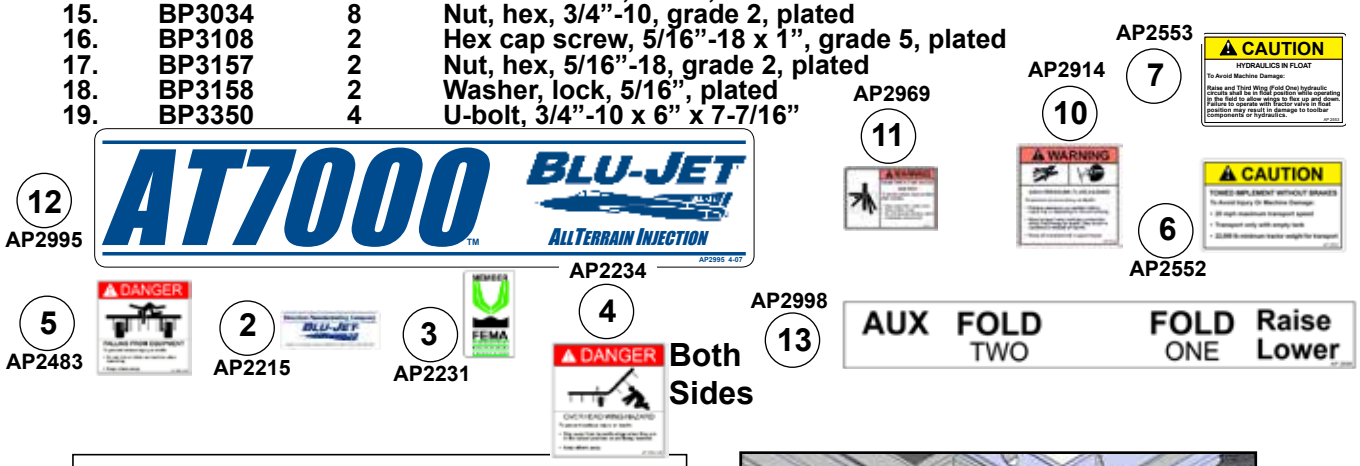

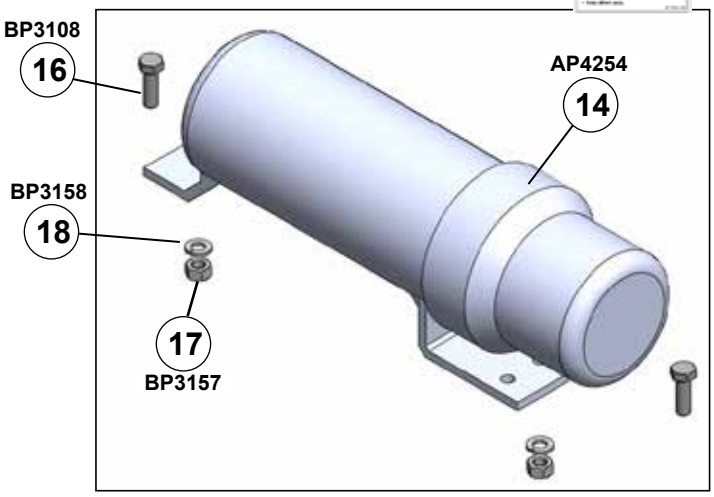

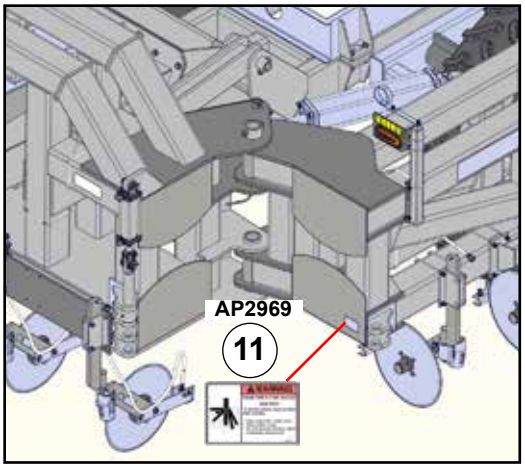

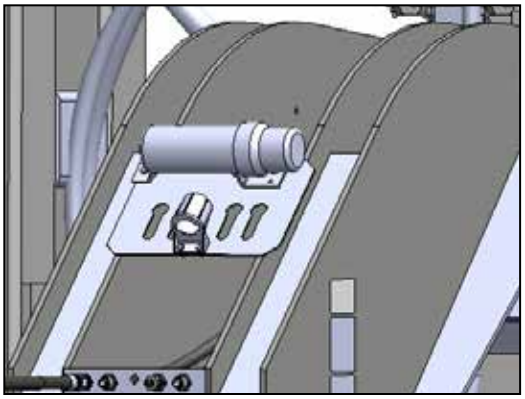

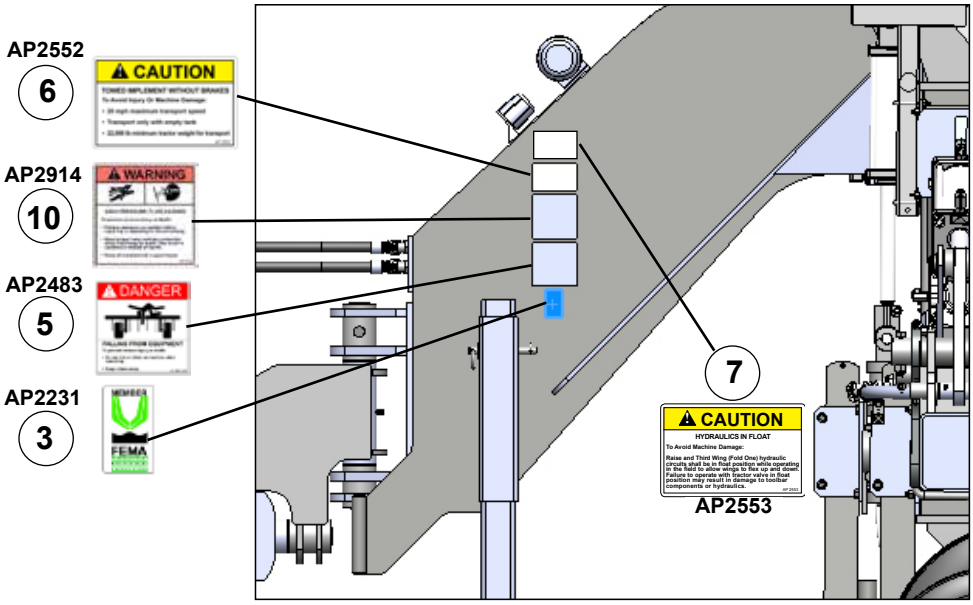
AP2552
6
CAUTION
AP2914
10
WARNING
AP2483
5
DANGER
AP2231
3
7
CAUTION
HYDRAULICS IN FLOAT
AP2553

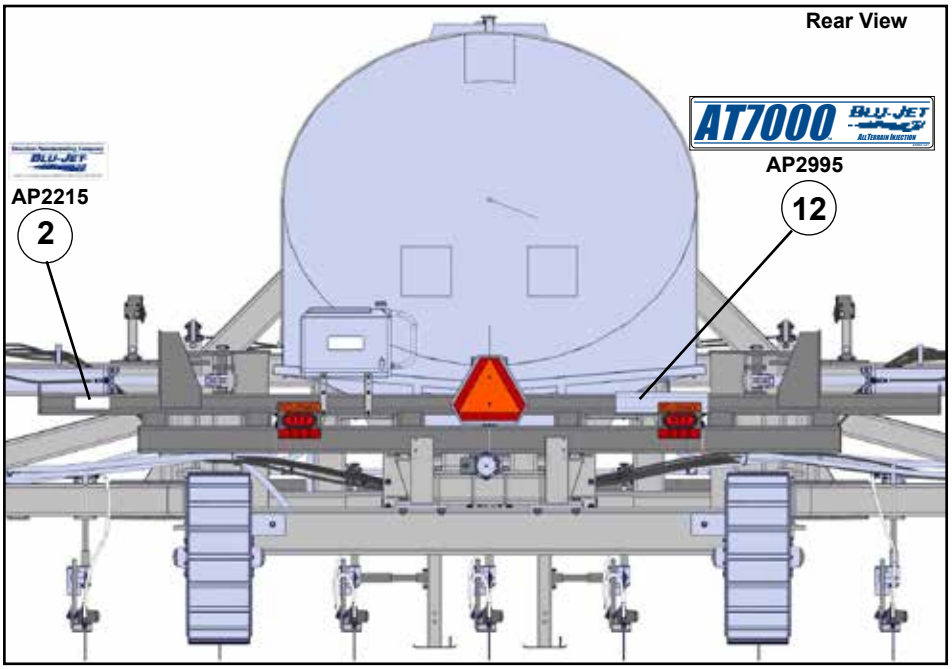
Rear View
AT7000
AP2995
12
AP2215
2

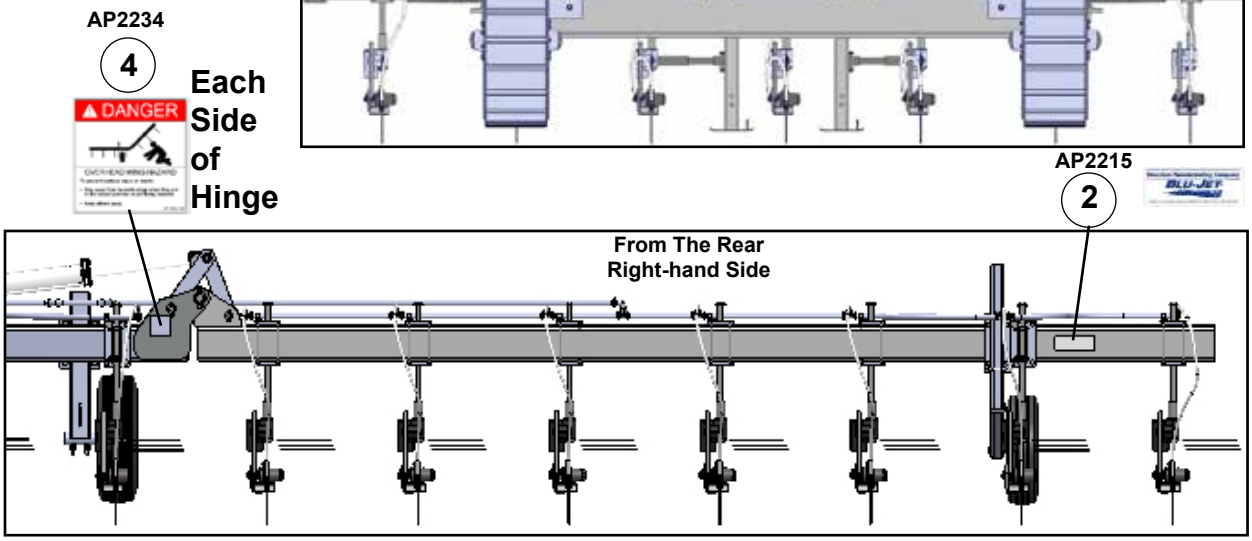
AP2234
4
DANGER
Each Side of Hinge
AP2215
2
From The Rear
Right-hand Side

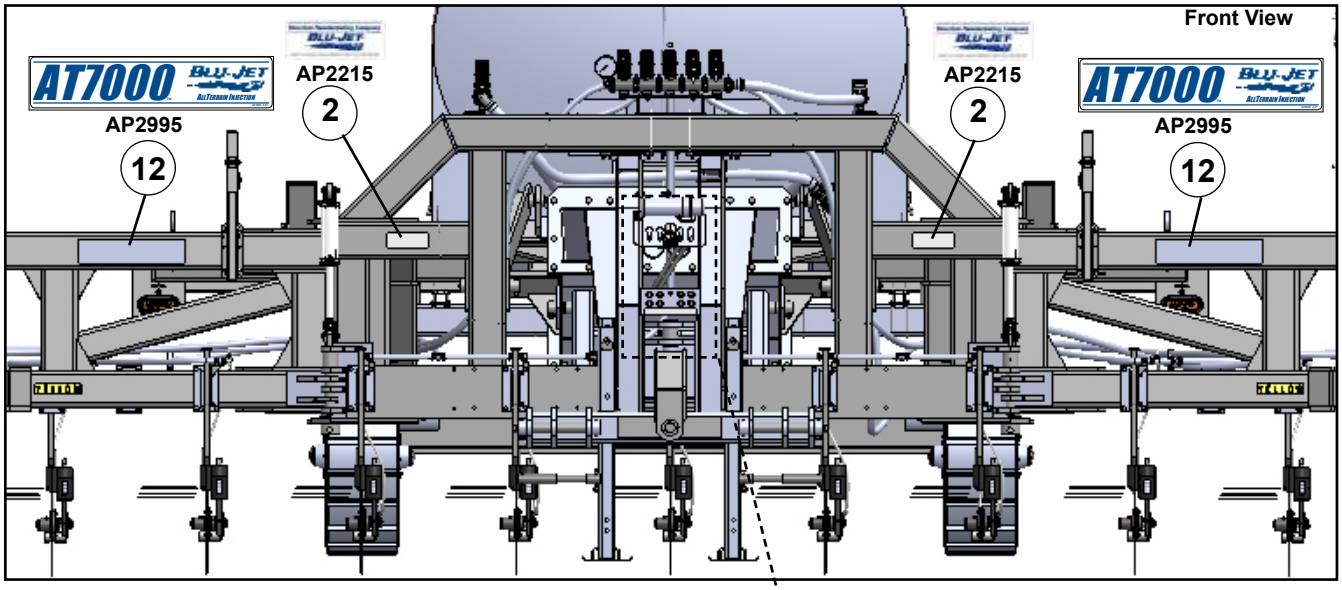
Front View
AP2215
2
AP2995
12
AP2215
2
AP2995
12

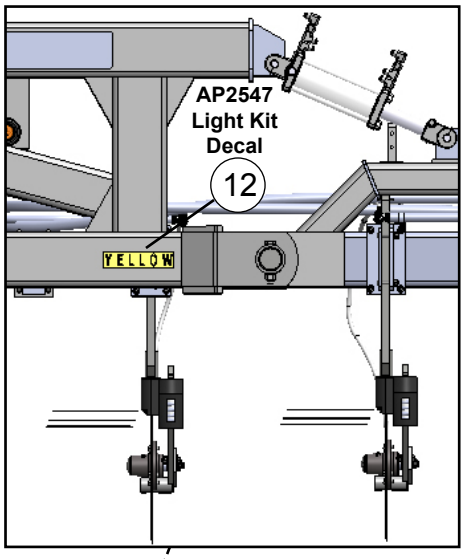
AP2547
Light Kit
Decal
12
YELLOW

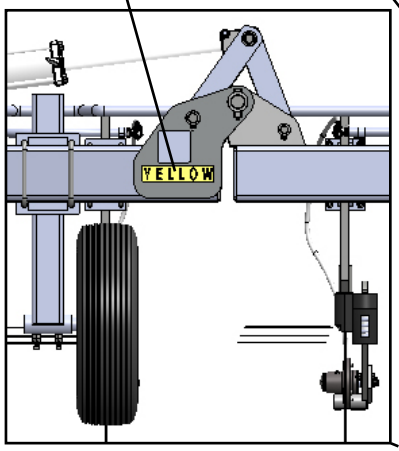
AP2547
Light Kit
Decal
12
YELLOW

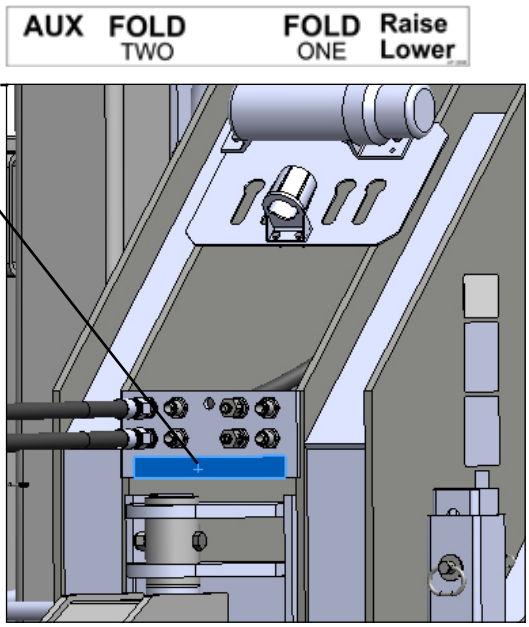
AP2998
13
AUX FOLD TWO
FOLD ONE Raise Lower

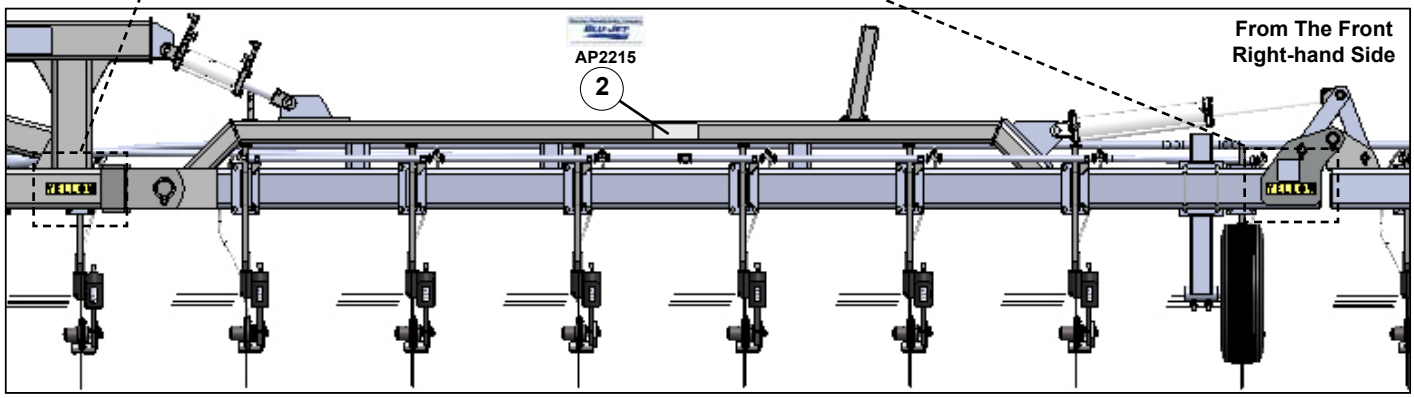
AP2215
2
From The Front
Right-hand Side

► **Bundle 41000021, LIGHTING KIT, AT7000, 90' LIQUID APPLICATOR**

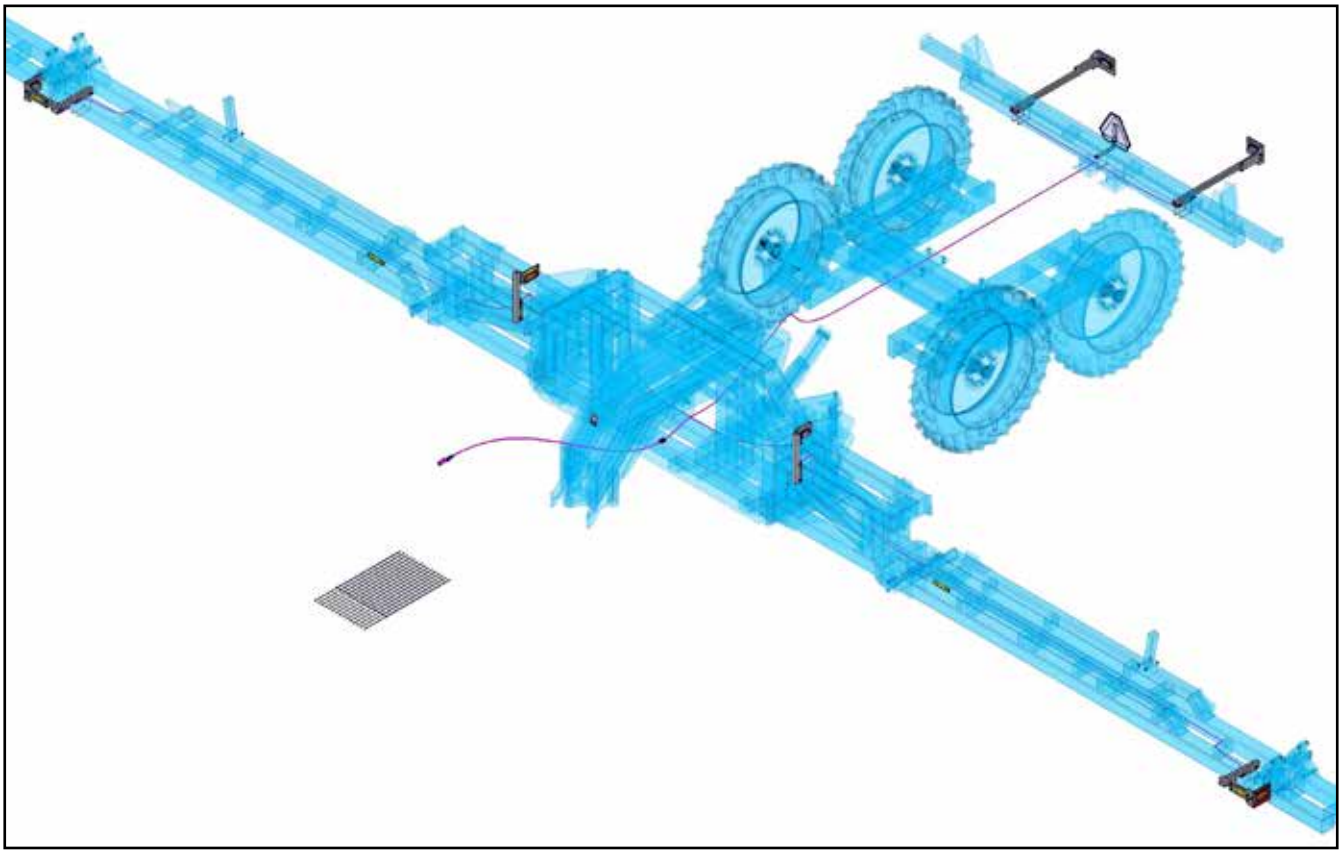

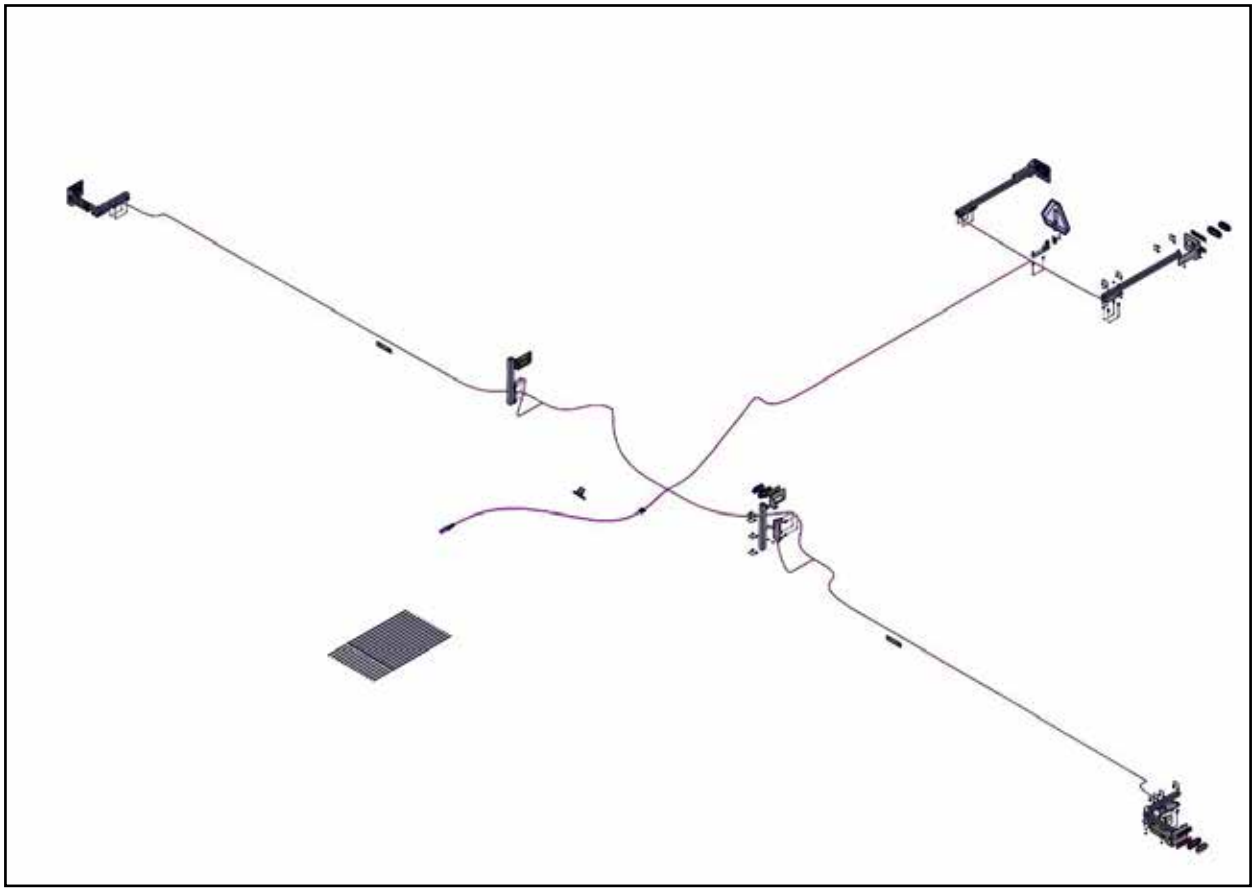

► **Bundle 41000021, LIGHTING KIT, AT7000, LIQUID APPLICATOR**

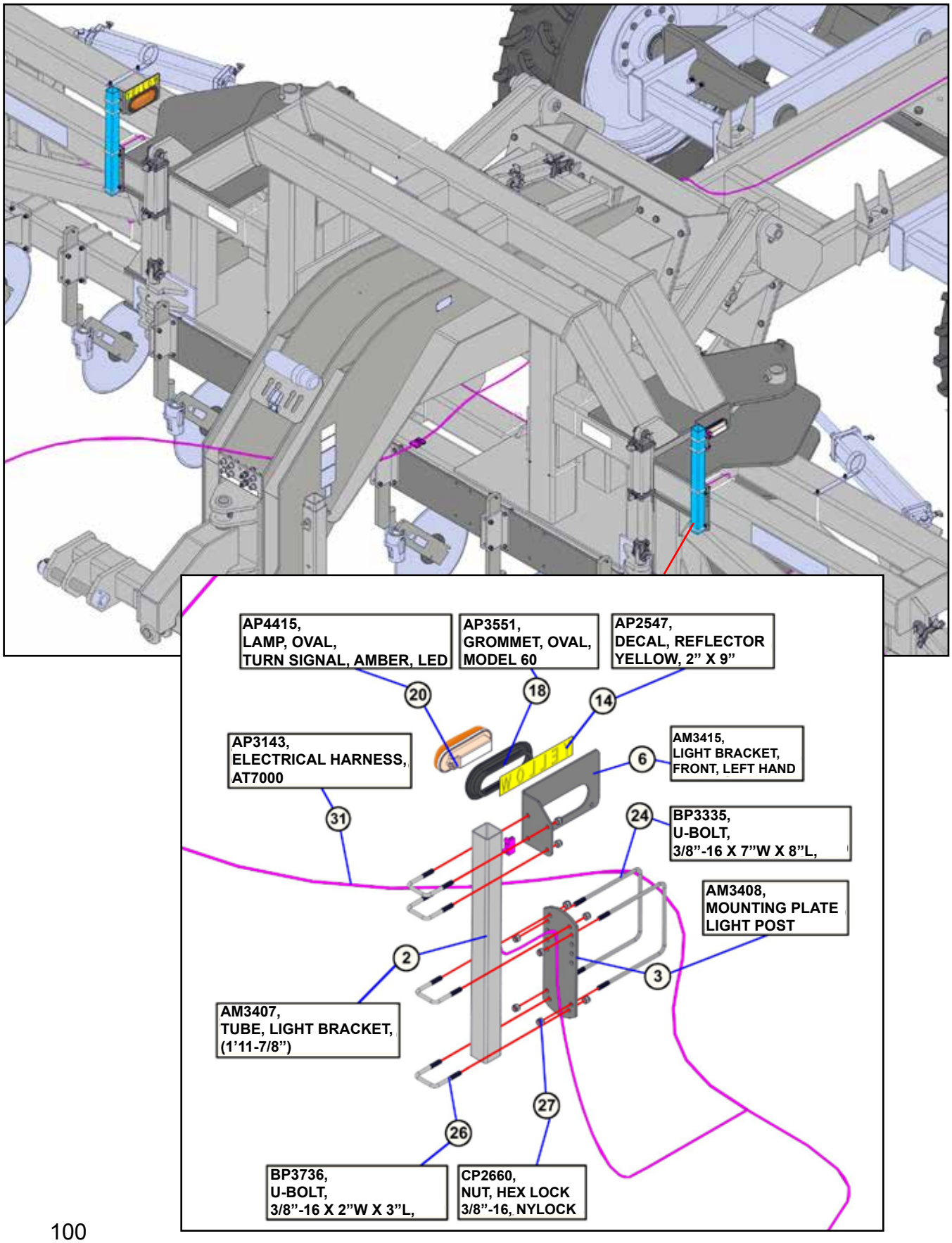

► **Bundle 41000021, LIGHTING KIT, AT7000, 90' LIQUID APPLICATOR**

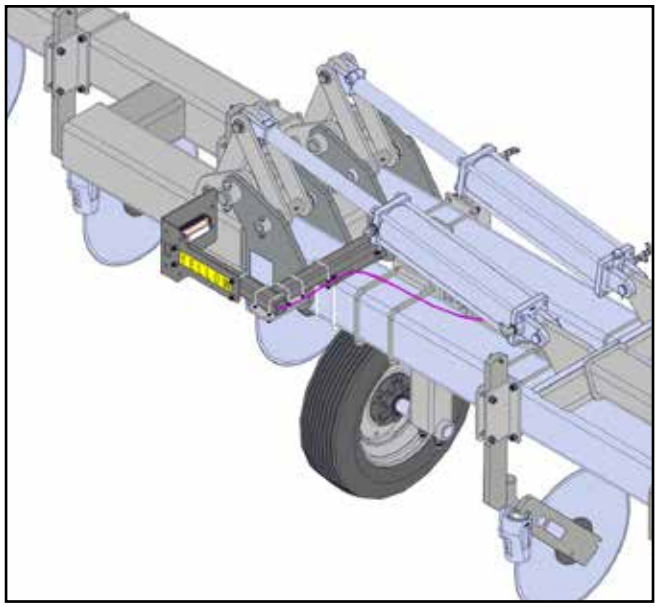

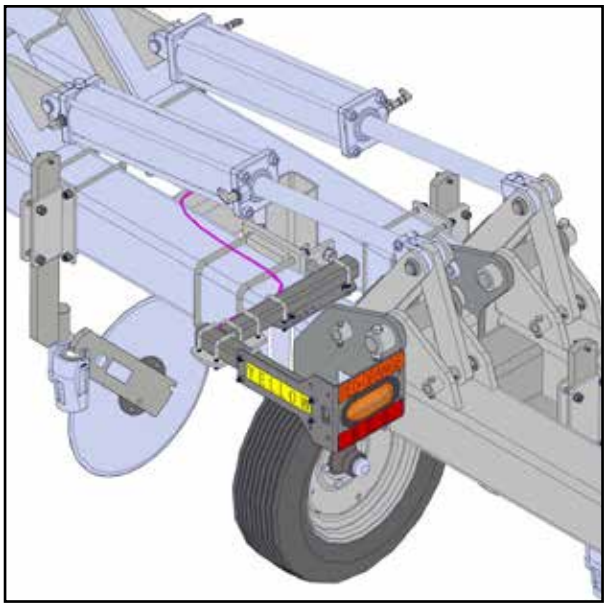

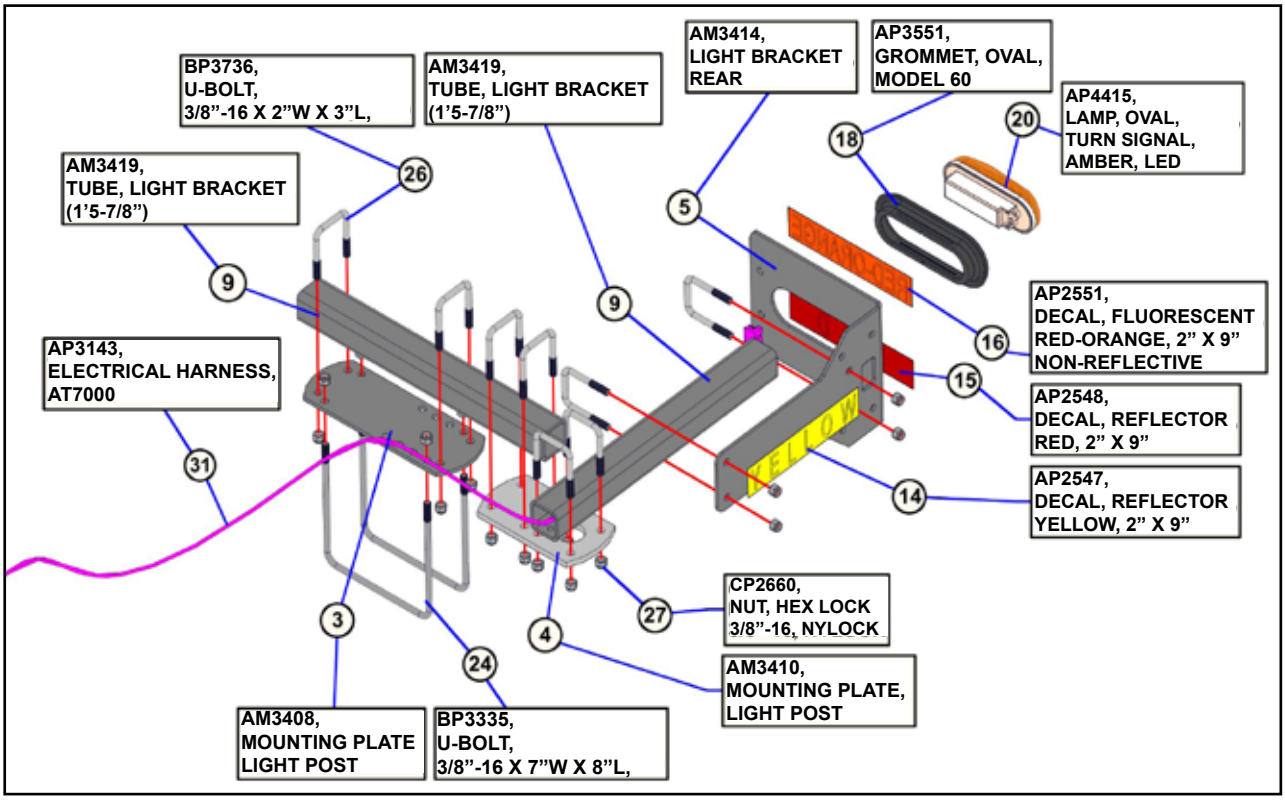

► **Bundle 41000021, LIGHTING KIT, AT7000, 90' LIQUID APPLICATOR**

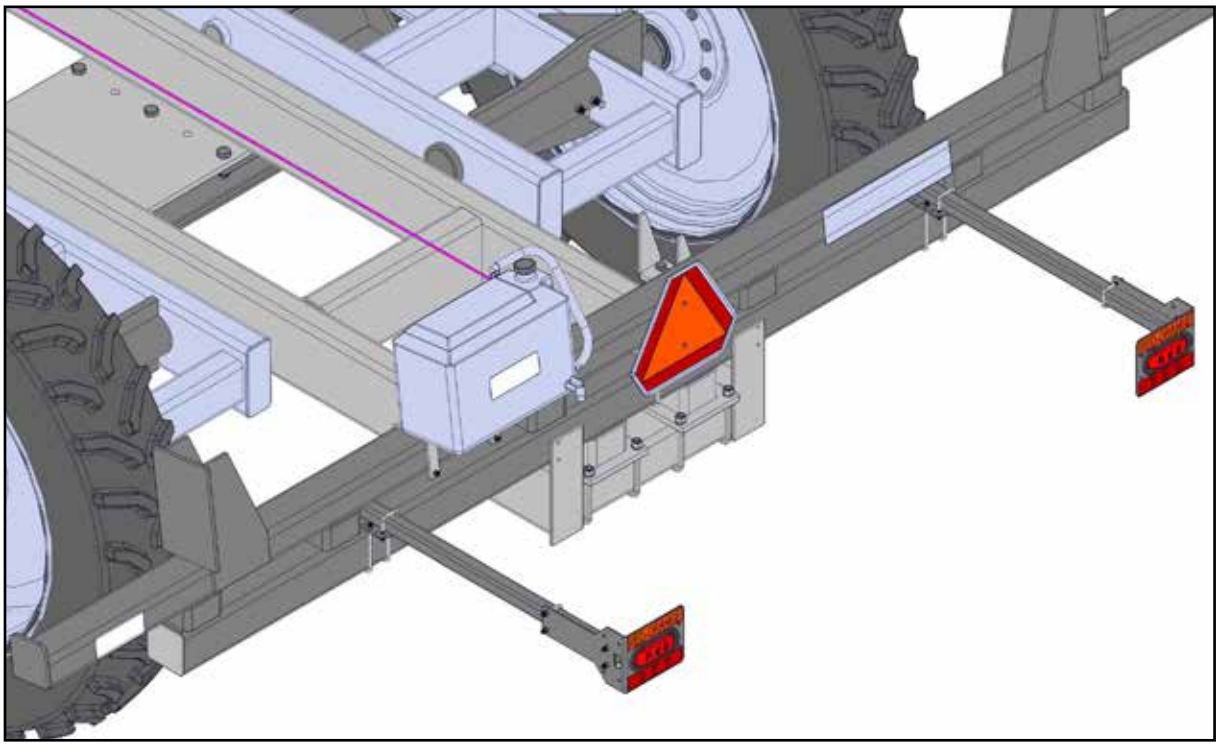

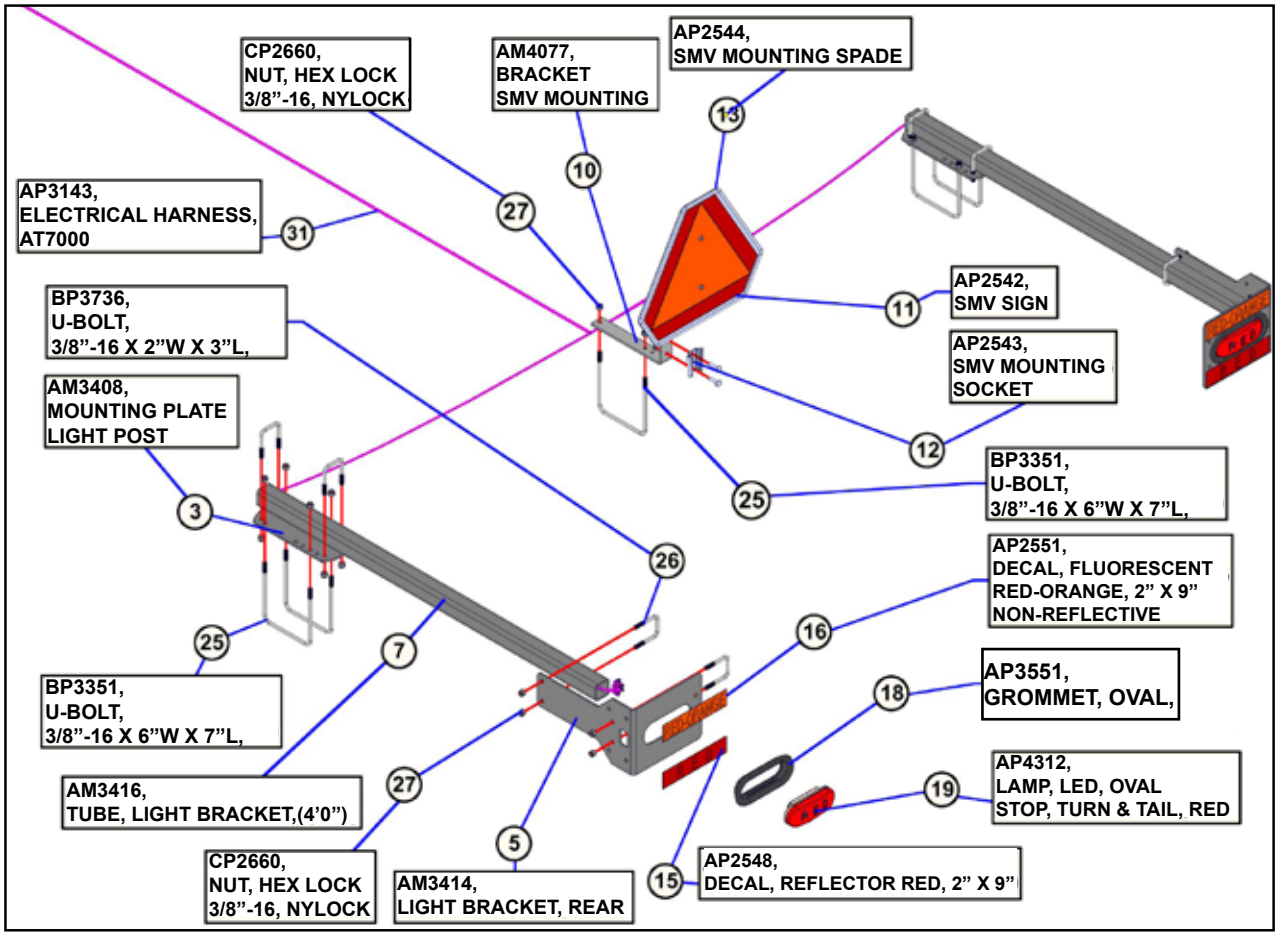

AT7000 Liquid Applicator (PKG00217)
41000021 Light Kit

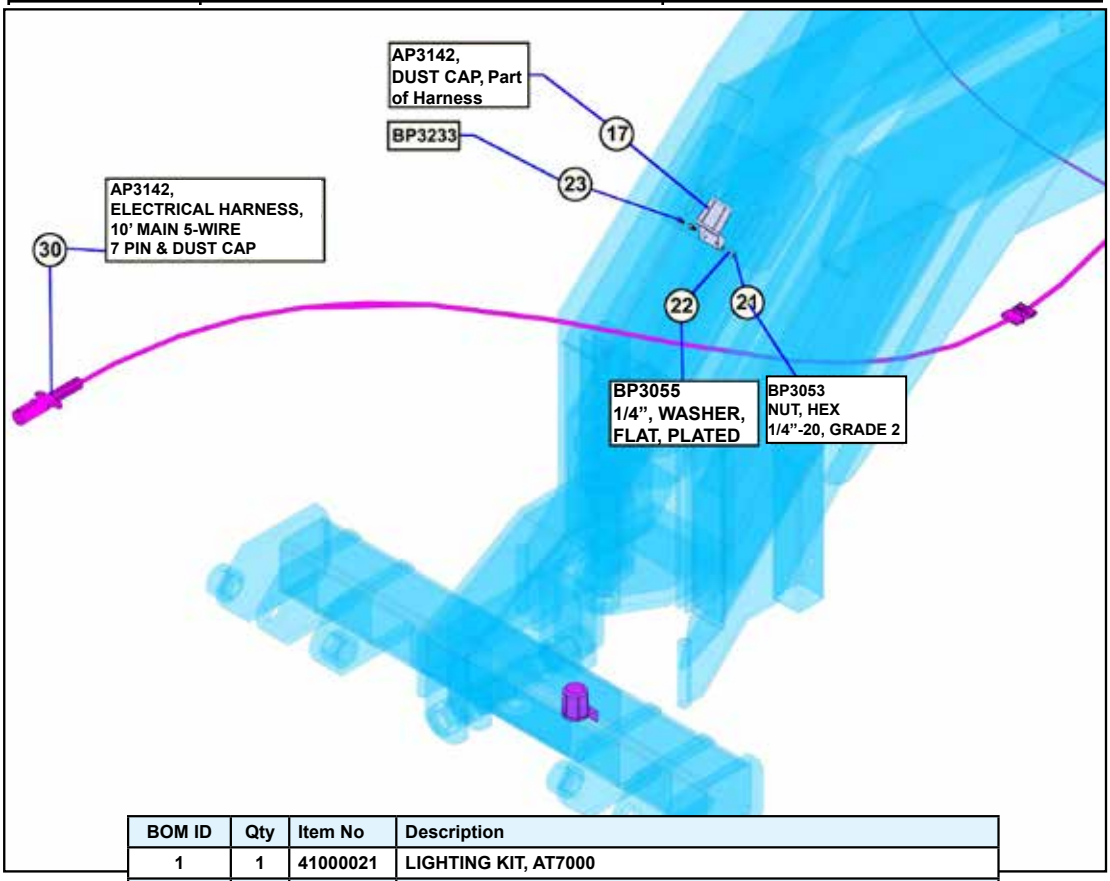

BOM ID	Qty	Item No	Description
1	1	41000021	LIGHTING KIT, AT7000
2	2	AM3407	TUBE, LIGHT BRACKET, (1'11"-7/8")
3	6	AM3408	MOUNTING PLATE, LIGHT POST T
4	2	AM3410	MOUNTING PLATE, LIGHT POST
5	4	AM3414	LIGHT BRACKET, REAR
6	1	AM3415	LIGHT BRACKET, FRONT, LEFT HAND
7	2	AM3416	TUBE, LIGHT BRACKET, (4'0")
8	1	AM3417	LIGHT BRACKET, FRONT, RIGHT HAND
9	4	AM3419	TUBE, LIGHT BRACKET, (1'5"-7/8")
10	1	AM4077	BRACKET, SMV MOUNTING
11	1	AP2542	SMV SIGN (SLOW MOVING VEHICLE)
12	1	AP2543	SMV MOUNTING SOCKET
13	1	AP2544	SMV MOUNTING SPADE
14	6	AP2547	DECAL, REFLECTOR, YELLOW, 2" X 9"
15	4	AP2548	DECAL, REFLECTOR, RED, 2" X 9"
16	4	AP2551	DECAL, FLUORESCENT, RED-ORANGE, 2" X 9", NON-REFLECTIVE
17	1	AP3142	ELECTRICAL HARNESS, DUST CAP
18	6	AP3551	GROMMET, OVAL, MODEL 60
19	2	AP4312	LAMP, LED, OVAL, STOP TURN & TAIL, RED
20	4	AP4415	LAMP, LED, OVAL, TURN SIGNAL, AMBER, LED
21	2	BP3053	NUT, HEX, 1/4"-20, GRADE 2
22	2	BP3055	WASHER, FLAT, 1/4", PLATED
23	2	BP3233	HEX CAP SCREW, 1/4"-20 X 3/4", GRADE 2, PLATED
24	8	BP3335	U-BOLT, 3/8"-16 X 7"W X 8"L, PLATED
25	5	BP3351	U-BOLT, 3/8"-16 X 6"W X 7"L, PLATED
26	32	BP3736	U-BOLT, 3/8"-16 X 2"W X 3"L, PLATED
27	90	CP2660	NUT, HEX LOCK, 3/8"-16, NYLOCK
28	15	DP4086	CABLE TIE 11-3/8"
29	15	DP4296	CABLE TIE 33"
30	1	AP3142	ELECTRICAL HARNESS, 10' MAIN 5-WIRE, 7 PIN
31	1	AP3143	ELECTRICAL HARNESS, AT7000

Centrifugal Pump and Plumbing (77000106) 37 Row 30”

BOM ID	Qty	Item No	Description
1	2	AM3408	MOUNTING PLATE
2	4	AM3564	BRACKET, MOUNTING, VALVES & FLOWMETER
3	37	AM3628	BRACKET, MOUNTING, LIQUID TRUNK LINE
4	2	AM4015	HOSE RETAINER, CLOSED LOOP, 6” & 7” MOUNTING
5	1	AM4827	BRACKET, FILL VALVE SUPPORT PLATE
6	1	AM7126	MOUNTING BRACKET, SECTIONAL VALVE, AT7000
7	2	AM7127	MOUNTING PLATE, CENTRIFUGAL PUMP, AT7000
8	1	AM7129	BRACKET, BOTTOM FILL VALVE
9	5	AM7230	SPRING HOOK
10	2	AP2284-1	HOSE RETAINER, 7” X 7”, WITH PLASTIC CAPS
11	37	AP3809	1-1/4” HOSE SUPPORT CLAMP
12	56	BP3450	NUT, HEX, 3/8”-16, F594 GRADE 1
13	2	BP3002	WASHER, LOCK, 3/8”, PLATED
14	4	BP3454	HEX CAP SCREW, 3/8”-16 X 1-1/2”, F593 GRADE 1
15	42	BP3453	HEX CAP SCREW, 3/8”-16 X 1”, F593 GRADE 1
16	3	BP3015	WASHER, FLAT, 3/8”, PLATED
17	2	BP3042	NUT, HEX, 1/2”-13, GRADE 2, PLATED
18	2	BP3043	WASHER, LOCK, 1/2”, PLATED
19	2	BP3108	HEX CAP SCREW, 5/16”-18 X 1”, GRADE 5, PLATED
20	2	BP3157	NUT, HEX, 5/16”-18, GRADE 2, PLATED
21	2	BP3158	WASHER, LOCK, 5/16”, PLATED
22	2	BP3159	WASHER, FLAT, 5/16”, PLATED
23	4	BP3335	U-BOLT, 3/8”-16 X 7”W X 8”L, PLATED
24	1	BP3351	U-BOLT, 3/8”-16 X 6”W X 7”L, PLATED
25	2	BP3738	HEX CAP SCREW, 1/2”-13 X 12”, GRADE 5, PLATED
26	1	CP2040	TANK OUTLET FITTING 1/2” FPT, FITS 1-3/8” HOLE
27	1	CP2042	HOODED VENT, 2” MPT POLY WITH SCREEN
28	1	CP2043	HOODED VENT, 2” MPT POLY WITHOUT SCREEN
29	16	CP2044	CLAMP, 2” FLANGE
30	16	CP2045	GASKET, EPDM, 2” FLANGE
31	2	CP2047	TEE, 2” FLANGE
32	1	CP2049	VALVE, BALL, 2” - 1-1/2” PORT
33	1	CP2050	STRAINER, 2” FLANGE, LINE
34	4	CP2051	HOSE BARB, 2” FLANGE X 1-1/2” HOSE
35	2	CP2052	ELBOW, 90 DEGREE, 2” FLANGE X 1-1/2” HOSE BARB
36	1	CP2054	ADAPTER, 1-1/2” MPT X 2” FLANGE
37	1	CP2055	STRAINER SCREEN, 30 MESH, LS230
38	2	CP2056	HOSE BARB, 2” FLANGE X 2” HOSE
39	1	CP2058	TEE, 3” FLANGE
40	1	CP2059	REDUCER, 3” FLANGE X 2” FLANGE
41	2	CP2060	HOSE BARB, 3” FLANGE X 3” HOSE
42	5	CP2062	CLAMP, 3” FLANGE
43	5	CP2063	GASKET, EPDM, 3” FLANGE, 300G
44	1	CP2064	VALVE, BALL, 3” FLANGE X 3” MALE COUPLER
45	1	CP2065	ADAPTER, 3” MPT X 3” FLANGE

BOM ID	Qty	Item No	Description
46	1	CP2068	CAP, 3”
47	1	CP2076	VALVE, BALL, 3” FLANGE, POLY
48	1	CP2081	ADAPTER, 3” MPT X 3” FLANGE
49	1	CP2085	ELBOW, 90 DEGREE, 1/2” MP X 1/4” HB, POLY
50	1	CP2086	HOSE BARB, 1/8”MP X 1/4” HOSE, POLY
51	1	CP2088	FLANGE PLUG, 2” WITH 1/4”FPT GAUGE PORT
52	5	CP2190	ELBOW, 90 DEGREE, 1”MP X 1”HB, POLY
53	1	CP2267	HOSE BARB, 1-1/2”MP X 1-1/2” HOSE, POLY
54	2	CP2286	ELBOW, 90 DEGREE, 3/4”MP X 1”HB, POLY
55	2	CP2313	HOSE CLAMP, 1/4” - 5/8” TUBING
56	92	CP2314	HOSE CLAMP, 1/2” - 1” TUBING
57	10	CP2316	HOSE CLAMP, 1-1/4” - 2” TUBING
58	4	CP2333	HOSE CLAMP, 2-1/2” - 3” TUBING
59	2	CP2408	HOSE CLAMP, 2” - 2-1/2” TUBING
60	4	CP2461	TEE, 3/4”HB X 3/4”HB X 3/4”HB, POLY TT9121212PP
61	5	CP2468	TEE, 3/4”FP X 3/4”HB X 3/4”HB, POLY
62	3	CP2469	HOSE BARB, 3/4”MP X 1”HB, POLY, TA101216PP
63	1	CP2472	HOSE, EPDM RUBBER, 3/4”, 200#
64	14	CP2487	DIAPHRAGM CHECK VALVE, SINGLE SHANK, 3/4” HOSE
65	1	CP2490	ELBOW, 90 DEGREE, 1-1/2”MP X 1-1/2”HB, POLY
66	1	CP2519	HOSE, EPDM RUBBER, 1”, 200
67	1	CP2532	HOSE, EPDM RUBBER, 1-1/2”, 150#
68	1	CP2550	TANK OUTLET FITTING, 2” FITS 3” HOLE
69	1	CP2573	HOSE, EVA, 1/4” REINFORCED, BULK, 250#
70	1	CP2574	HOSE, EPDM RUBBER, REINFORCED, 85#
71	1	CP2575	GAUGE, 0-160 PSI, 4” CASE, 1/4”MPT, LIQUID FILLED, STAINLESS STEEL
72	1	CP2590	HOSE, EPDM RUBBER, 2”, REINFORCED, 100#
73	2	CP2591	HOSE CLAMP, 3” TUBING
74	1	CP3111	VALVE, THROTTLING, 1-1/4” MANUAL
75	5	CP3121	VALVE, MANIFOLD SHUTOFF, 1” FPT OUTLET, POLY
76	1	CP3122	FLOWMETER, 5-106 GPM, ORION
77	1	CP3123	VALVE, REGULATING, 1-1/2” FPT, TEEJET
78	1	CP3129	PUMP, CENTRIFUGAL, <95 GPM, HYDRAULIC DRIVE 13-16 GPM
79	2	CP3130	ADAPTER, FLY NUT, 1-1/2” BSP - 1-1/2” HOSE BARB
80	1	DP4012	STREET ELBOW, 4MP-4FP, 90 DEGREE
81	1	DP4016	ADAPTER, 10MJ-8MP, 90 DEGREE
82	1	DP4029	ADAPTER, 10MJ-8MP
83	37	DP4086	CABLE TIE 11-3/8”
84	16	DP4296	CABLE TIE 33”
85	2	DP4383	COUPLER, PIONEER, 8MQBA-8FSAE
86	2	DP4392	ADAPTER, 8MSAE-10MJIC, 6400-10-8
87	1	DP4418	ELBOW, 90 DEGREE, 10MJIC-10FJX, 6500-10
88	2	DP5281	HOSE, HYDRAULIC 5/8” X 84” (7’), 10FJX-10FJX
89	2	DP5282	HOSE, HYDRAULIC 5/8” X 144” (12’), 10FJX-10FJX

Centrifugal Pump and Plumbing (77000113) 33 Row 30”

BOM ID	Qty	Item No	Description
1	2	AM3408	MOUNTING PLATE
2	4	AM3564	BRACKET, MOUNTING, VALVES & FLOWMETER
3	33	AM3628	BRACKET, MOUNTING, LIQUID TRUNK LINE
4	2	AM4015	HOSE RETAINER, CLOSED LOOP, 6” & 7” MOUNTING
5	1	AM4827	BRACKET, FILL VALVE SUPPORT PLATE
6	1	AM7126	MOUNTING BRACKET, SECTIONAL VALVE, AT7000
7	2	AM7127	MOUNTING PLATE, CENTRIFUGAL PUMP, AT7000
8	1	AM7129	BRACKET, BOTTOM FILL VALVE
9	5	AM7230	SPRING HOOK
10	2	AP2284-1	HOSE RETAINER, 7” X 7”, WITH PLASTIC CAPS
11	33	AP3809	1-1/4” HOSE SUPPORT CLAMP
12	52	BP3450	NUT, HEX, 3/8”-16, F594 GRADE 1
13	52	BP3451	WASHER, LOCK, 3/8”, 18-8 STAINLESS STEEL
14	4	BP3454	HEX CAP SCREW, 3/8”-16 X 1-1/2”, F593 GRADE 1
15	38	BP3453	HEX CAP SCREW, 3/8”-16 X 1”, F593 GRADE 1
16	3	BP3015	WASHER, FLAT, 3/8”, PLATED
17	2	BP3042	NUT, HEX, 1/2”-13, GRADE 2, PLATED
18	2	BP3043	WASHER, LOCK, 1/2”, PLATED
19	2	BP3108	HEX CAP SCREW, 5/16”-18 X 1”, GRADE 5, PLATED
20	2	BP3157	NUT, HEX, 5/16”-18, GRADE 2, PLATED
21	2	BP3158	WASHER, LOCK, 5/16”, PLATED
22	2	BP3159	WASHER, FLAT, 5/16”, PLATED
23	4	BP3335	U-BOLT, 3/8”-16 X 7”W X 8”L, PLATED
24	1	BP3351	U-BOLT, 3/8”-16 X 6”W X 7”L, PLATED
25	2	BP3738	HEX CAP SCREW, 1/2”-13 X 12”, GRADE 5, PLATED
26	1	CP2040	TANK OUTLET FITTING 1/2” FPT, FITS 1-3/8” HOLE
27	1	CP2042	HOODED VENT, 2” MPT POLY WITH SCREEN
28	1	CP2043	HOODED VENT, 2” MPT POLY WITHOUT SCREEN
29	16	CP2044	CLAMP, 2” FLANGE
30	16	CP2045	GASKET, EPDM, 2” FLANGE
31	2	CP2047	TEE, 2” FLANGE
32	1	CP2049	VALVE, BALL, 2” - 1-1/2” PORT
33	1	CP2050	STRAINER, 2” FLANGE, LINE
34	4	CP2051	HOSE BARB, 2” FLANGE X 1-1/2” HOSE
35	2	CP2052	ELBOW, 90 DEGREE, 2” FLANGE X 1-1/2” HOSE BARB
36	1	CP2054	ADAPTER, 1-1/2” MPT X 2” FLANGE
37	1	CP2055	STRAINER SCREEN, 30 MESH, LS230
38	2	CP2056	HOSE BARB, 2” FLANGE X 2” HOSE
39	1	CP2058	TEE, 3” FLANGE
40	1	CP2059	REDUCER, 3” FLANGE X 2” FLANGE
41	2	CP2060	HOSE BARB, 3” FLANGE X 3” HOSE
42	5	CP2062	CLAMP, 3” FLANGE
43	5	CP2063	GASKET, EPDM, 3” FLANGE, 300G
44	1	CP2064	VALVE, BALL, 3” FLANGE X 3” MALE COUPLER
45	1	CP2065	ADAPTER, 3” MPT X 3” FLANGE

BOM ID	Qty	Item No	Description
46	1	CP2068	CAP, 3”
47	1	CP2076	VALVE, BALL, 3” FLANGE, POLY
48	1	CP2081	ADAPTER, 3” MPT X 3” FLANGE
49	1	CP2085	ELBOW, 90 DEGREE, 1/2” MP X 1/4” HB, POLY
50	1	CP2086	HOSE BARB, 1/8”MP X 1/4”HOSE, POLY
51	1	CP2088	FLANGE PLUG, 2” WITH 1/4”FPT GAUGE PORT
52	5	CP2190	ELBOW, 90 DEGREE, 1”MP X 1”HB, POLY
53	1	CP2267	HOSE BARB, 1-1/2”MP X 1-1/2” HOSE, POLY
54	2	CP2286	ELBOW, 90 DEGREE, 3/4”MP X 1”HB, POLY
55	2	CP2313	HOSE CLAMP, 1/4” - 5/8” TUBING
56	84	CP2314	HOSE CLAMP, 1/2” - 1” TUBING
57	10	CP2316	HOSE CLAMP, 1-1/4” - 2” TUBING
58	4	CP2333	HOSE CLAMP, 2-1/2” - 3” TUBING
59	2	CP2408	HOSE CLAMP, 2” - 2-1/2” TUBING
60	4	CP2461	TEE, 3/4”HB X 3/4”HB X 3/4”HB, POLY TT9121212PP
61	5	CP2468	TEE, 3/4”FP X 3/4”HB X 3/4”HB, POLY
62	3	CP2469	HOSE BARB, 3/4”MP X 1”HB, POLY, TA101216PP
63	1	CP2472	HOSE, EPDM RUBBER, 3/4”, 200#
64	14	CP2487	DIAPHRAGM CHECK VALVE, SINGLE SHANK, 3/4” HOSE
65	1	CP2490	ELBOW, 90 DEGREE, 1-1/2”MP X 1-1/2”HB, POLY
66	1	CP2519	HOSE, EPDM RUBBER, 1”, 200
67	1	CP2532	HOSE, EPDM RUBBER, 1-1/2”, 150#
68	1	CP2550	TANK OUTLET FITTING, 2” FITS 3” HOLE
69	1	CP2573	HOSE, EVA, 1/4” REINFORCED, BULK, 250#
70	1	CP2574	HOSE, EPDM RUBBER, REINFORCED, 85#
71	1	CP2575	GAUGE, 0-160 PSI, 4” CASE, 1/4”MPT, LIQUID FILLED, STAINLESS STEEL
72	1	CP2590	HOSE, EPDM RUBBER, 2”, REINFORCED, 100#
73	2	CP2591	HOSE CLAMP, 3” TUBING
74	1	CP3111	VALVE, THROTTLING, 1-1/4” MANUAL
75	5	CP3121	VALVE, MANIFOLD SHUTOFF, 1” FPT OUTLET, POLY
76	1	CP3122	FLOWMETER, 5-106 GPM, ORION
77	1	CP3123	VALVE, REGULATING, 1-1/2” FPT, TEEJET
78	1	CP3129	PUMP, CENTRIFUGAL, <95 GPM, HYDRAULIC DRIVE 13-16 GPM
79	2	CP3130	ADAPTER, FLY NUT, 1-1/2” BSP - 1-1/2” HOSE BARB
80	1	DP4012	STREET ELBOW, 4MP-4FP, 90 DEGREE
81	1	DP4016	ADAPTER, 10MJ-8MP, 90 DEGREE
82	1	DP4029	ADAPTER, 10MJ-8MP
83	37	DP4086	CABLE TIE 11-3/8”
84	16	DP4296	CABLE TIE 33”
85	2	DP4383	COUPLER, PIONEER, 8MQBA-8FSAE
86	2	DP4392	ADAPTER, 8MSAE-10MJIC, STRAIGHT, 6400-10-8
87	1	DP4418	ELBOW, 90 DEGREE, 10MJIC-10FJX, 6500-10
88	2	DP5281	HOSE, HYDRAULIC 5/8” X 84” (7’), 10FJX-10FJX
89	2	DP5282	HOSE, HYDRAULIC 5/8” X 144” (12’), 10FJX-10FJX

Centrifugal Pump and Plumbing (77000110) 49 Row 20”

BOM ID	Qty	Item No	Description
1	2	AM3408	MOUNTING PLATE
2	4	AM3564	BRACKET, MOUNTING, VALVES & FLOWMETER
3	49	AM3628	BRACKET, MOUNTING, LIQUID TRUNK LINE
4	2	AM4015	HOSE RETAINER, CLOSED LOOP, 6” & 7” MOUNTING
5	1	AM4827	BRACKET, FILL VALVE SUPPORT PLATE
6	1	AM7126	MOUNTING BRACKET, SECTIONAL VALVE, AT7000
7	2	AM7127	MOUNTING PLATE, CENTRIFUGAL PUMP, AT7000
8	1	AM7129	BRACKET, BOTTOM FILL VALVE
9	7	AM7230	SPRING HOOK
10	2	AP2284-1	HOSE RETAINER, 7” X 7”, WITH PLASTIC CAPS
11	49	AP3809	1-1/4” HOSE SUPPORT CLAMP
12	68	BP3450	NUT, HEX, 3/8”-16, F594 GRADE 1
13	68	BP3451	WASHER, LOCK, 3/8”, 18-8 STAINLESS STEEL
14	4	BP3454	HEX CAP SCREW, 3/8”-16 X 1-1/2”, F593 GRADE 1
15	54	BP3453	HEX CAP SCREW, 3/8”-16 X 1”, F593 GRADE 1
16	3	BP3015	WASHER, FLAT, 3/8”, PLATED
17	2	BP3042	NUT, HEX, 1/2”-13, GRADE 2, PLATED
18	2	BP3043	WASHER, LOCK, 1/2”, PLATED
19	2	BP3108	HEX CAP SCREW, 5/16”-18 X 1”, GRADE 5, PLATED
20	2	BP3157	NUT, HEX, 5/16”-18, GRADE 2, PLATED
21	2	BP3158	WASHER, LOCK, 5/16”, PLATED
22	2	BP3159	WASHER, FLAT, 5/16”, PLATED
23	4	BP3335	U-BOLT, 3/8”-16 X 7”W X 8”L, PLATED
24	1	BP3351	U-BOLT, 3/8”-16 X 6”W X 7”L, PLATED
25	2	BP3738	HEX CAP SCREW, 1/2”-13 X 12”, GRADE 5, PLATED
26	1	CP2040	TANK OUTLET FITTING 1/2” FPT, FITS 1-3/8” HOLE
27	1	CP2042	HOODED VENT, 2” MPT POLY WITH SCREEN
28	1	CP2043	HOODED VENT, 2” MPT POLY WITHOUT SCREEN
29	16	CP2044	CLAMP, 2” FLANGE
30	16	CP2045	GASKET, EPDM, 2” FLANGE
31	2	CP2047	TEE, 2” FLANGE
32	1	CP2049	VALVE, BALL, 2” - 1-1/2” PORT
33	1	CP2050	STRAINER, 2” FLANGE, LINE
34	4	CP2051	HOSE BARB, 2” FLANGE X 1-1/2” HOSE
35	2	CP2052	ELBOW, 90 DEGREE, 2” FLANGE X 1-1/2” HOSE BARB
36	1	CP2054	ADAPTER, 1-1/2” MPT X 2” FLANGE
37	1	CP2055	STRAINER SCREEN, 30 MESH, LS230
38	2	CP2056	HOSE BARB, 2” FLANGE X 2” HOSE
39	1	CP2058	TEE, 3” FLANGE
40	1	CP2059	REDUCER, 3” FLANGE X 2” FLANGE
41	2	CP2060	HOSE BARB, 3” FLANGE X 3” HOSE
42	5	CP2062	CLAMP, 3” FLANGE
43	5	CP2063	GASKET, EPDM, 3” FLANGE, 300G
44	1	CP2064	VALVE, BALL, 3” FLANGE X 3” MALE COUPLER
45	1	CP2065	ADAPTER, 3” MPT X 3” FLANGE

BOM ID	Qty	Item No	Description
46	1	CP2068	CAP, 3”
47	1	CP2076	VALVE, BALL, 3” FLANGE, POLY
48	1	CP2081	ADAPTER, 3” MPT X 3” FLANGE
49	1	CP2085	ELBOW, 90 DEGREE, 1/2” MP X 1/4” HB, POLY
50	1	CP2086	HOSE BARB, 1/8”MP X 1/4”HOSE, POLY
51	1	CP2088	FLANGE PLUG, 2” WITH 1/4”FPT GAUGE PORT
52	5	CP2190	ELBOW, 90 DEGREE, 1”MP X 1”HB, POLY
53	1	CP2267	HOSE BARB, 1-1/2”MP X 1-1/2” HOSE, POLY
54	2	CP2286	ELBOW, 90 DEGREE, 3/4”MP X 1”HB, POLY
55	2	CP2313	HOSE CLAMP, 1/4” - 5/8” TUBING
56	116	CP2314	HOSE CLAMP, 1/2” - 1” TUBING
57	10	CP2316	HOSE CLAMP, 1-1/4” - 2” TUBING
58	4	CP2333	HOSE CLAMP, 2-1/2” - 3” TUBING
59	2	CP2408	HOSE CLAMP, 2” - 2-1/2” TUBING
60	4	CP2461	TEE, 3/4”HB X 3/4”HB X 3/4”HB, POLY TT9121212PP
61	5	CP2468	TEE, 3/4”FP X 3/4”HB X 3/4”HB, POLY
62	3	CP2469	HOSE BARB, 3/4”MP X 1”HB, POLY, TA101216PP
63	1	CP2472	HOSE, EPDM RUBBER, 3/4”, 200#
64	14	CP2487	DIAPHRAGM CHECK VALVE, SINGLE SHANK, 3/4” HOSE
65	1	CP2490	ELBOW, 90 DEREEE, 1-1/2”MP X 1-1/2”HB, POLY
66	1	CP2519	HOSE, EPDM RUBBER, 1”, 200
67	1	CP2532	HOSE, EPDM RUBBER, 1-1/2”, 150#
68	1	CP2550	TANK OUTLET FITTING, 2” FITS 3” HOLE
69	1	CP2573	HOSE, EVA, 1/4” REINFORCED, BULK, 250#
70	1	CP2574	HOSE, EPDM RUBBER, REINFORCED, 85#
71	1	CP2575	GAUGE, 0-160 PSI, 4” CASE, 1/4”MPT, LIQUID FILLED, STAINLESS STEEL
72	1	CP2590	HOSE, EPDM RUBBER, 2”, REINFORCED, 100#
73	2	CP2591	HOSE CLAMP, 3” TUBING
74	1	CP3111	VALVE, THROTTLING, 1-1/4” MANUAL
75	5	CP3121	VALVE, MANIFOLD SHUTOFF, 1” FPT OUTLET, POLY
76	1	CP3122	FLOWMETER, 5-106 GPM, ORION
77	1	CP3123	VALVE, REGULATING, 1-1/2” FPT, TEEJET
78	1	CP3129	PUMP, CENTRIFUGAL, <95 GPM, HYDRAULIC DRIVE 13-16 GPM
79	2	CP3130	ADAPTER, FLY NUT, 1-1/2” BSP - 1-1/2” HOSE BARB
80	1	DP4012	STREET ELBOW, 4MP-4FP, 90 DEGREE
81	1	DP4016	ADAPTER, 10MJ-8MP, 90 DEGREE
82	1	DP4029	ADAPTER, 10MJ-8MP
83	37	DP4086	CABLE TIE 11-3/8”
84	16	DP4296	CABLE TIE 33”
85	2	DP4383	COUPLER, PIONEER, 8MQBA-8FSAE
86	2	DP4392	ADAPTER, 8MSAE-10MJIC, 6400-10-8
87	1	DP4418	ELBOW, 90 DEGREE, 10MJIC-10FJX, 6500-10
88	2	DP5281	HOSE, HYDRAULIC 5/8” X 84” (7’), 10FJX-10FJX
89	2	DP5282	HOSE, HYDRAULIC 5/8” X 144” (12’), 10FJX-10FJX

Centrifugal Pump and Plumbing

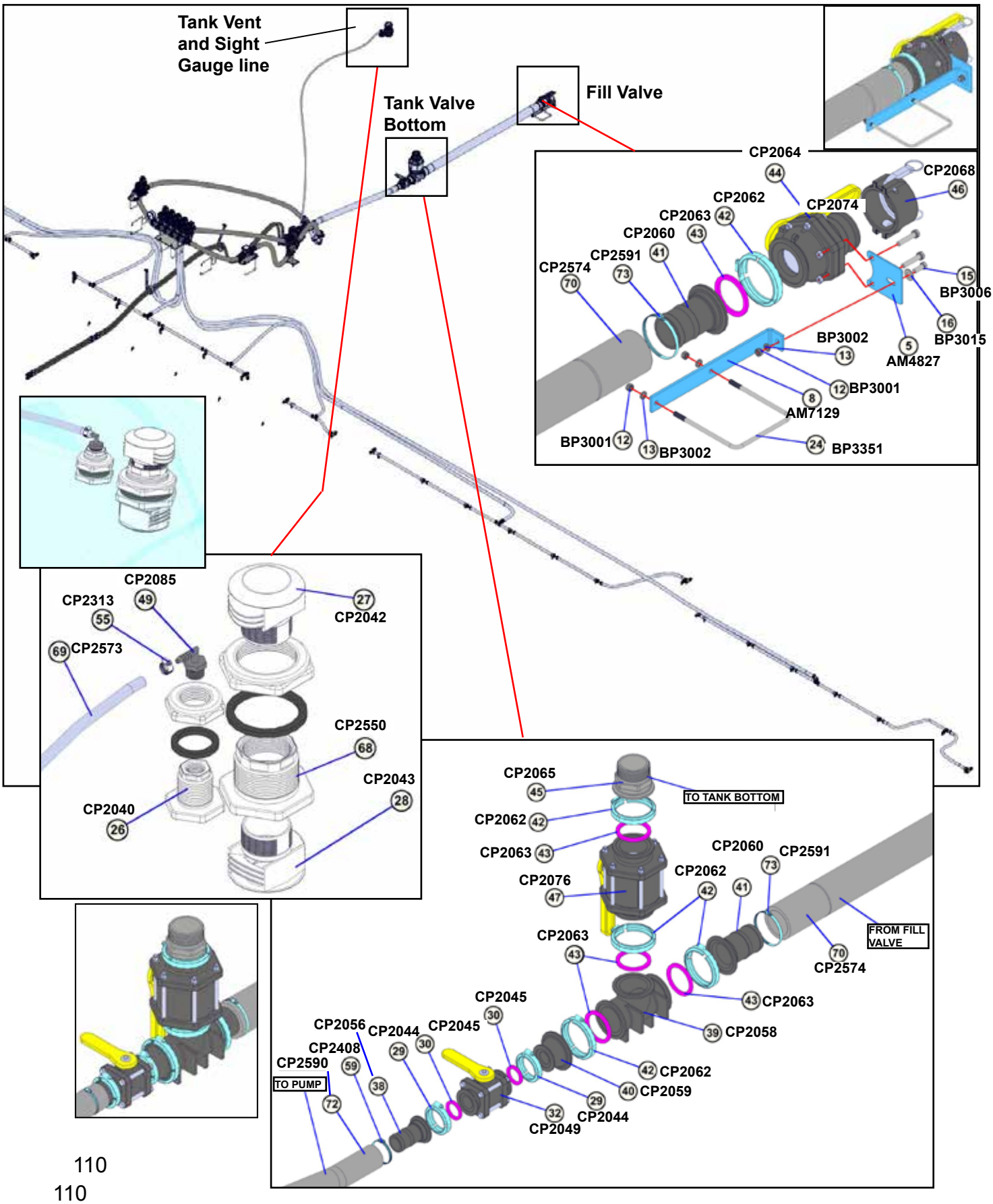

110

Centrifugal Pump and Plumbing

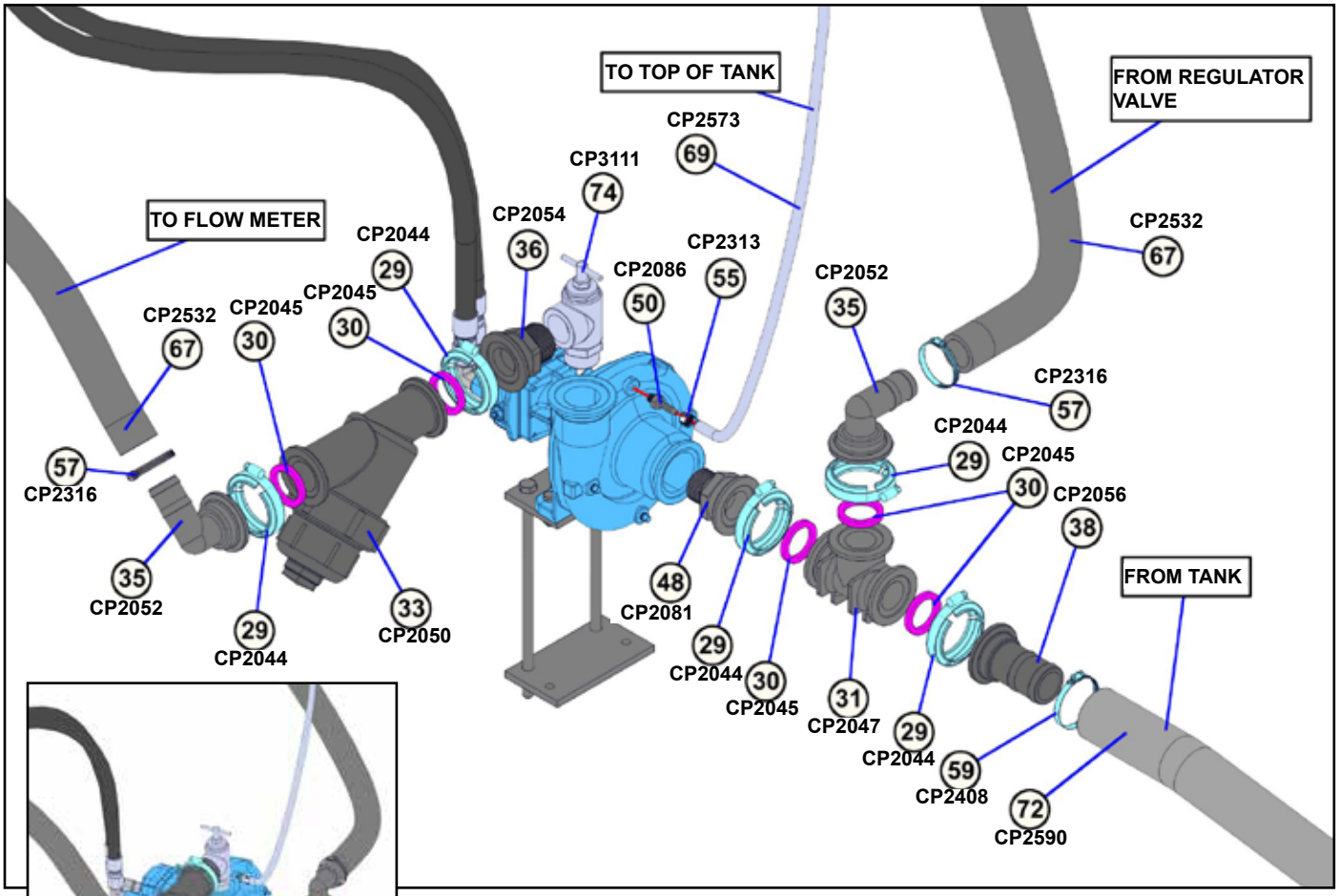

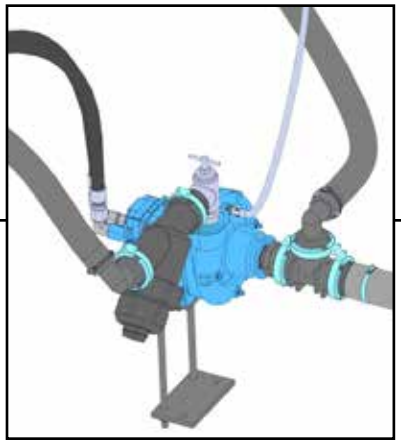

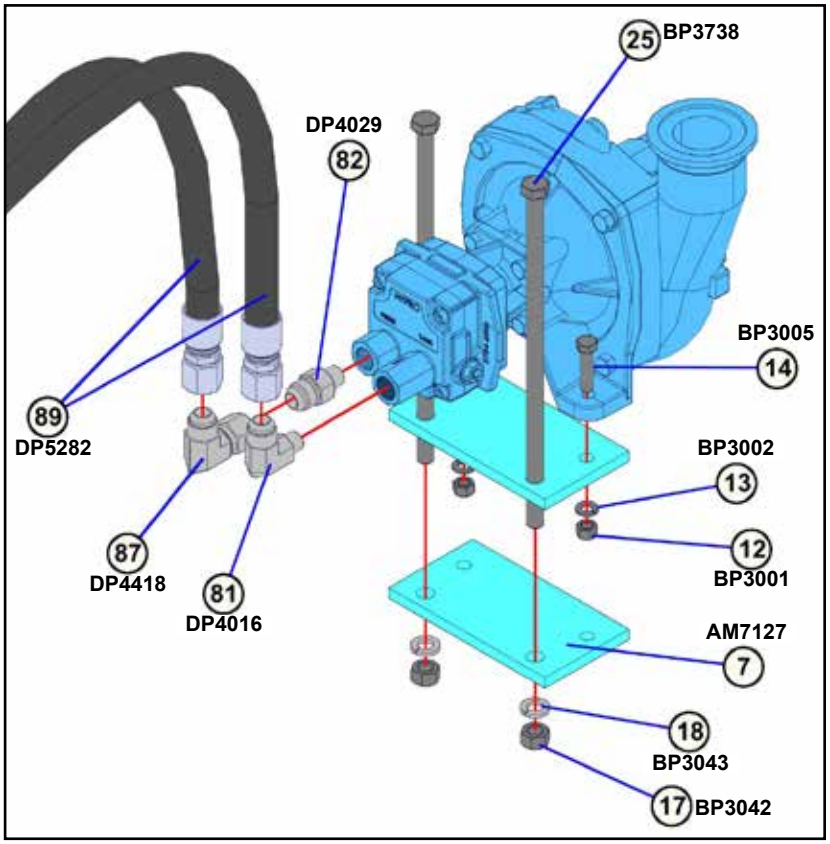

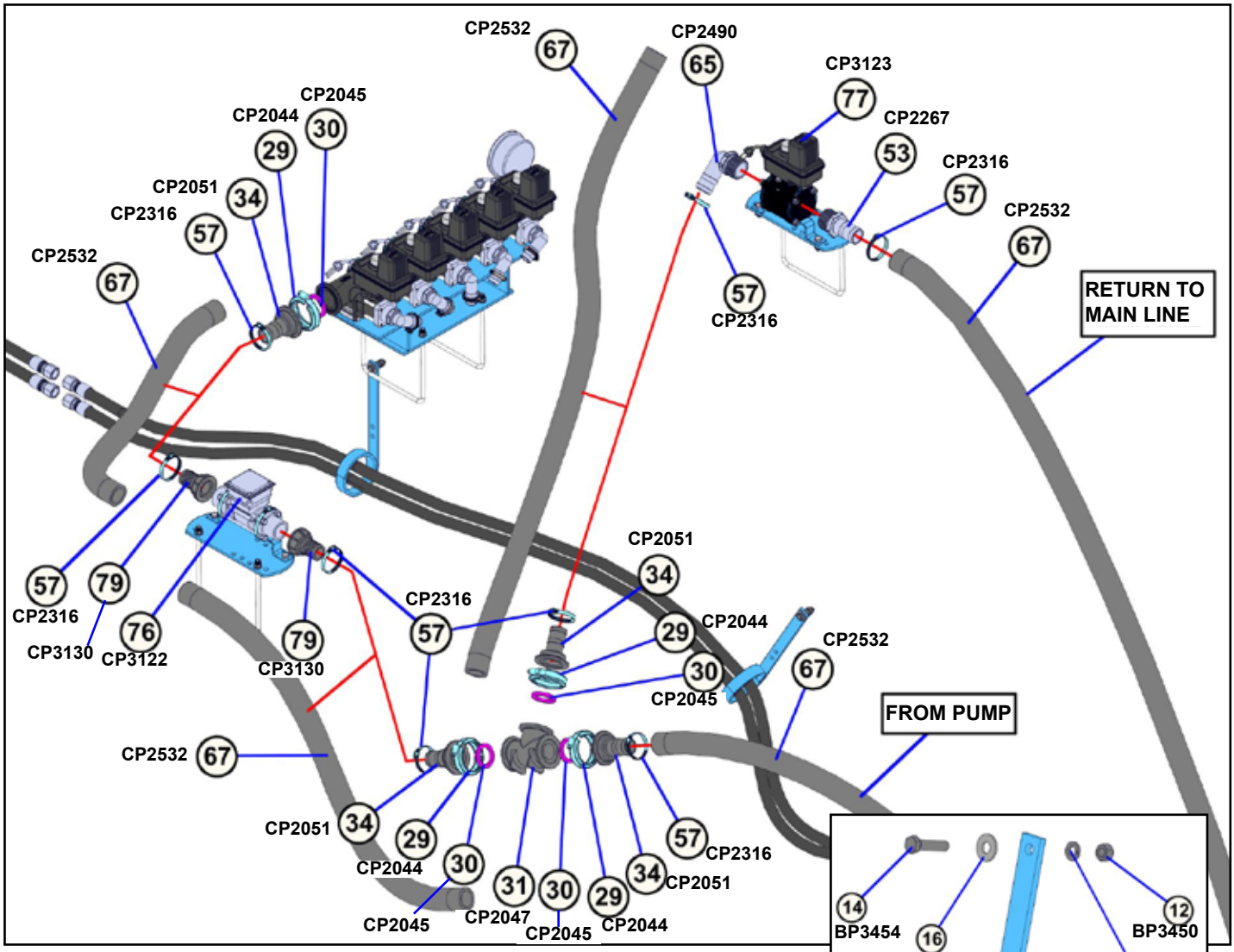
CP2532 67
CP2490 65
CP3123 77
CP2267 53
CP2316 57
CP2532 67
RETURN TO MAIN LINE
57 CP2316
CP2045 30
CP2044 29
CP2051 34
CP2316 57
CP2532 67
57 CP2316
79 CP3130
76 CP3122
79 CP3130
CP2316 57
CP2051 34
29 CP2044
30 CP2045
CP2532 67
FROM PUMP
CP2532 67
CP2051 34
29 CP2044
30 CP2045
CP2047
31
30 CP2045
29 CP2044
34 CP2051
57 CP2316

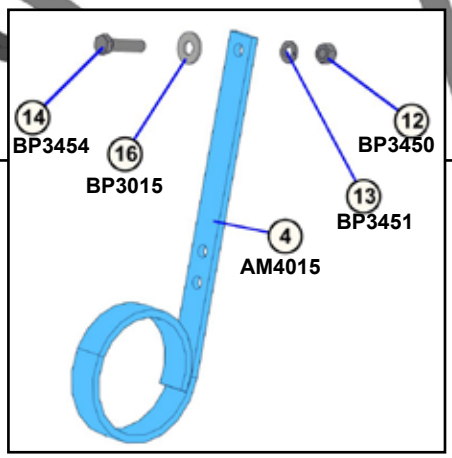
14 BP3454
16 BP3015
12 BP3450
13 BP3451
4 AM4015

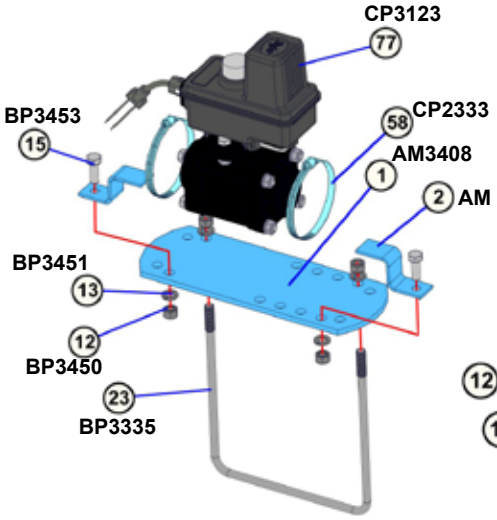
CP3123 77
BP3453 15
58 CP2333
AM3408 1
2 AM 3564
BP3451 13
12 BP3450
23 BP3335

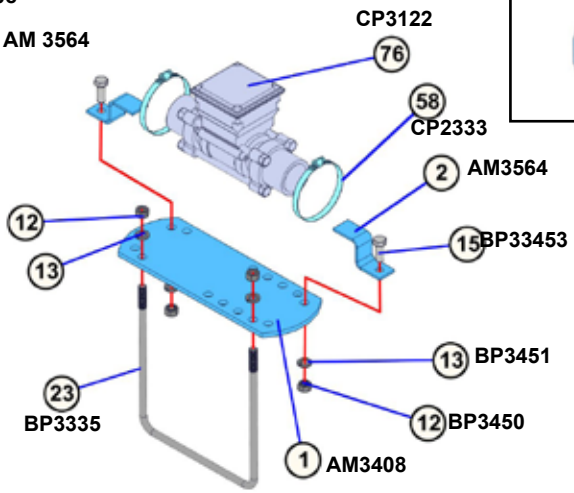
CP3122 76
58 CP2333
2 AM3564
15 BP33453
12
13
13 BP3451
23 BP3335
12 BP3450
1 AM3408

Centrifugal Pump and Plumbing

Task	Procedures	Illustrations

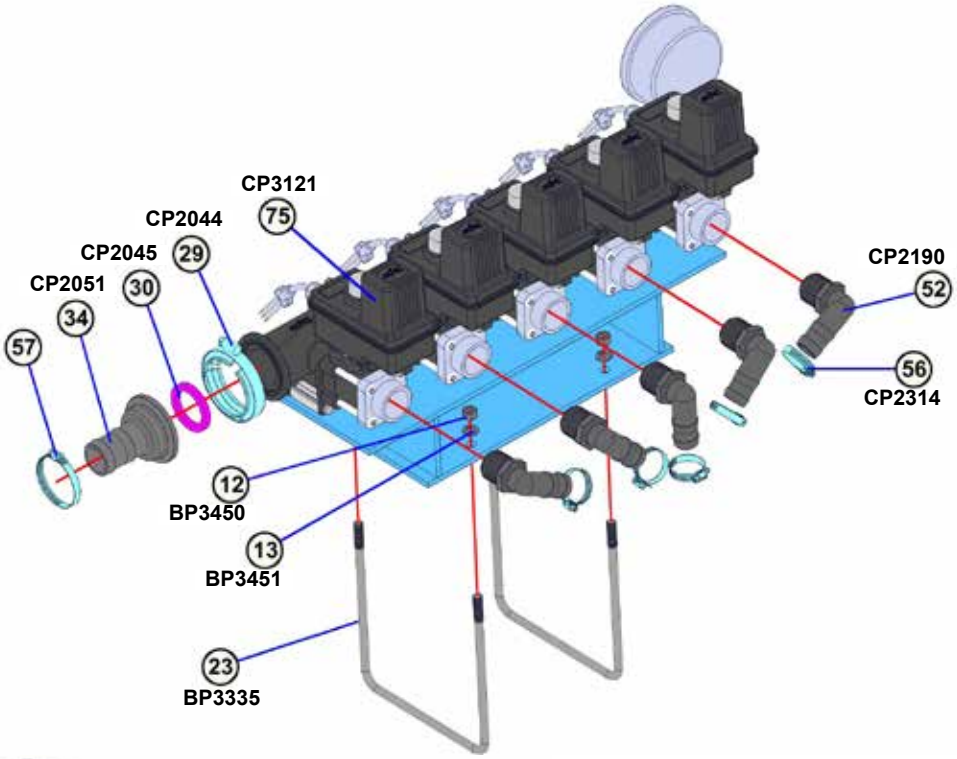

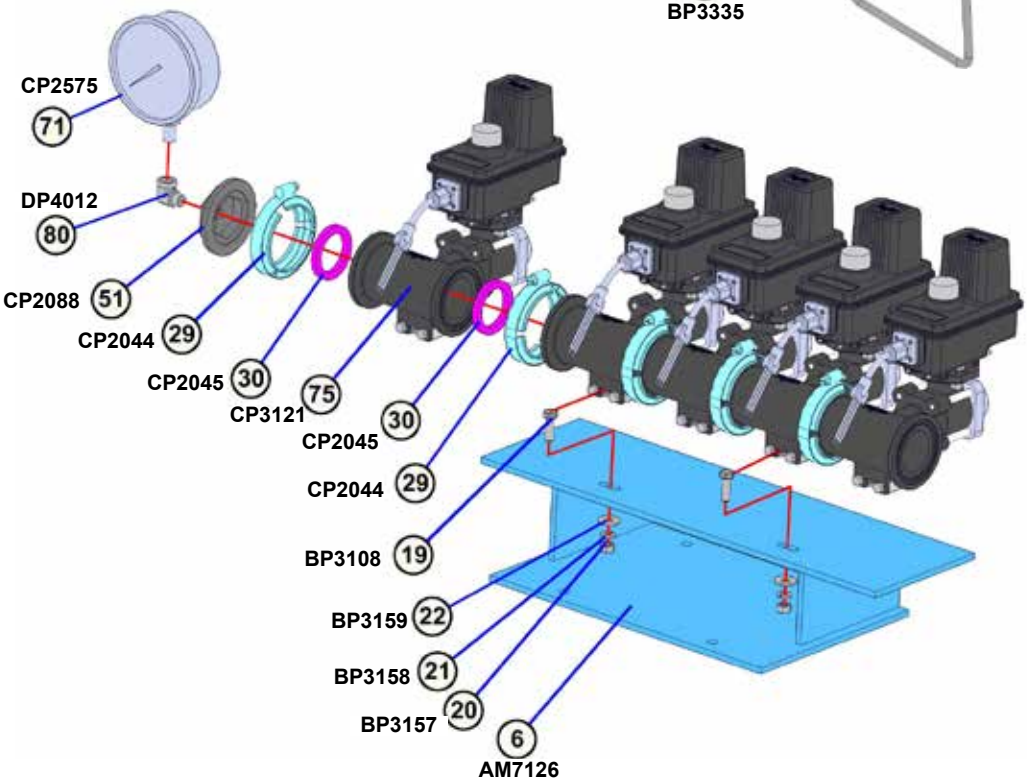

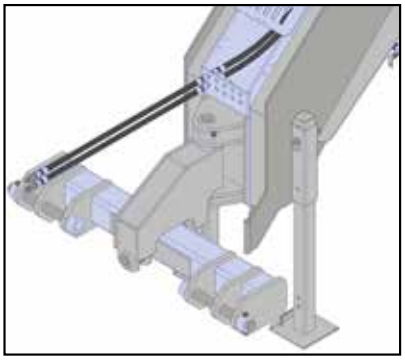

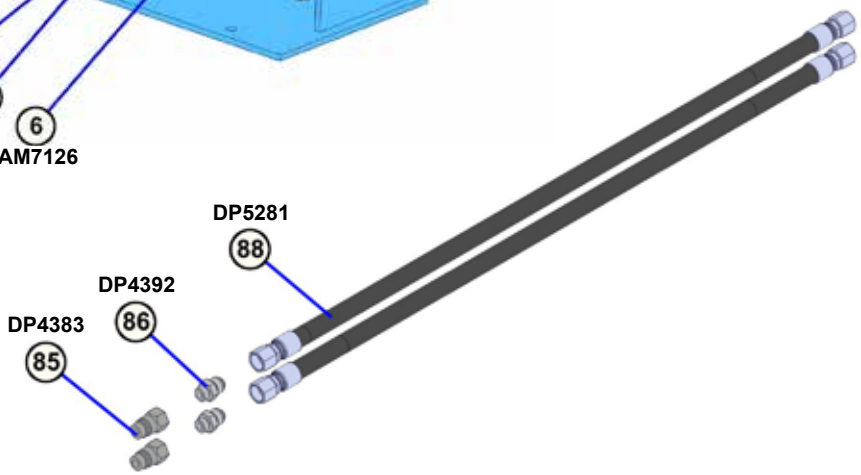

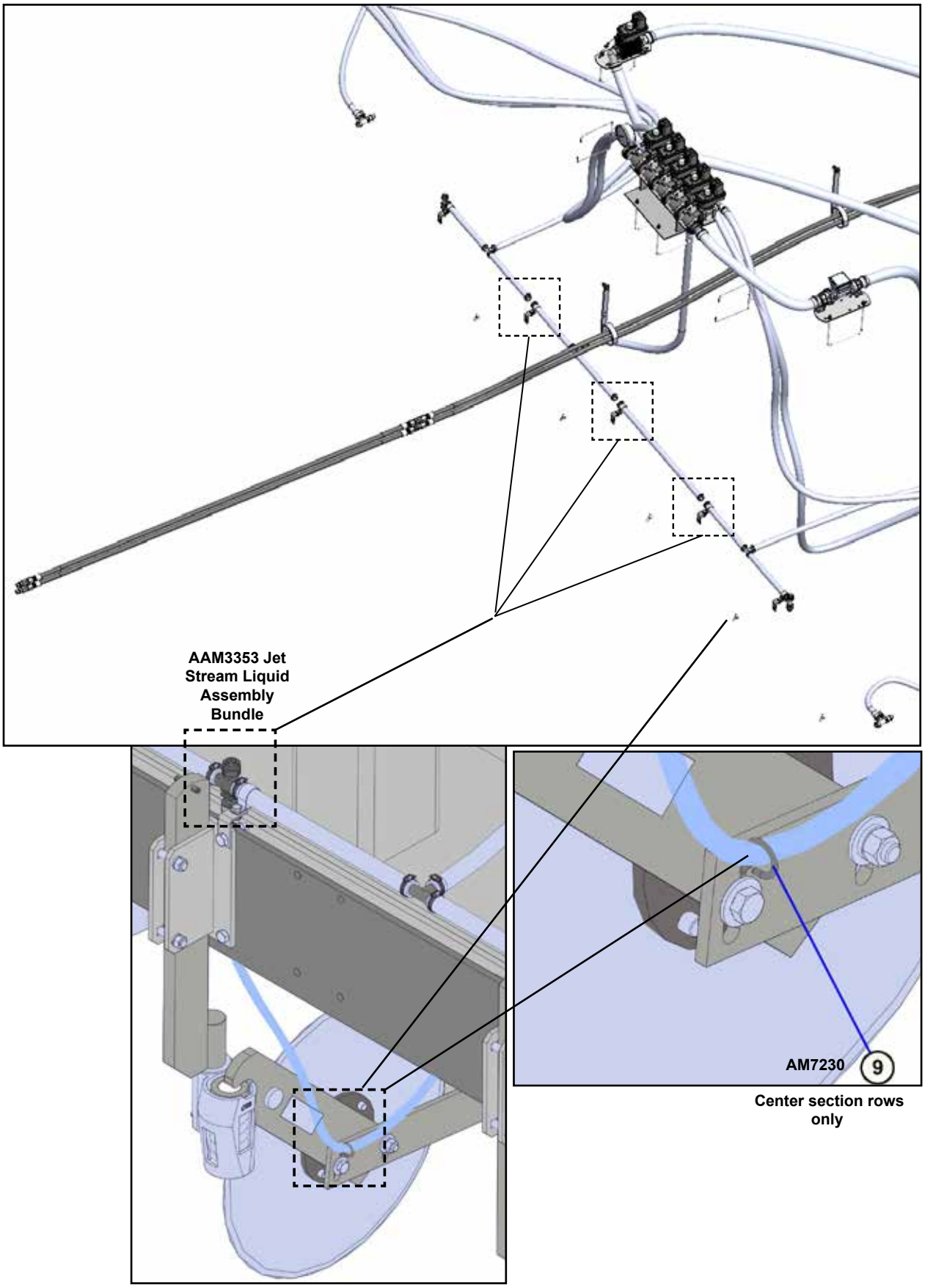
AAM3353 Jet Stream Liquid Assembly Bundle
AM7230
9
Center section rows only

Centrifugal Pump and Plumbing Center Section

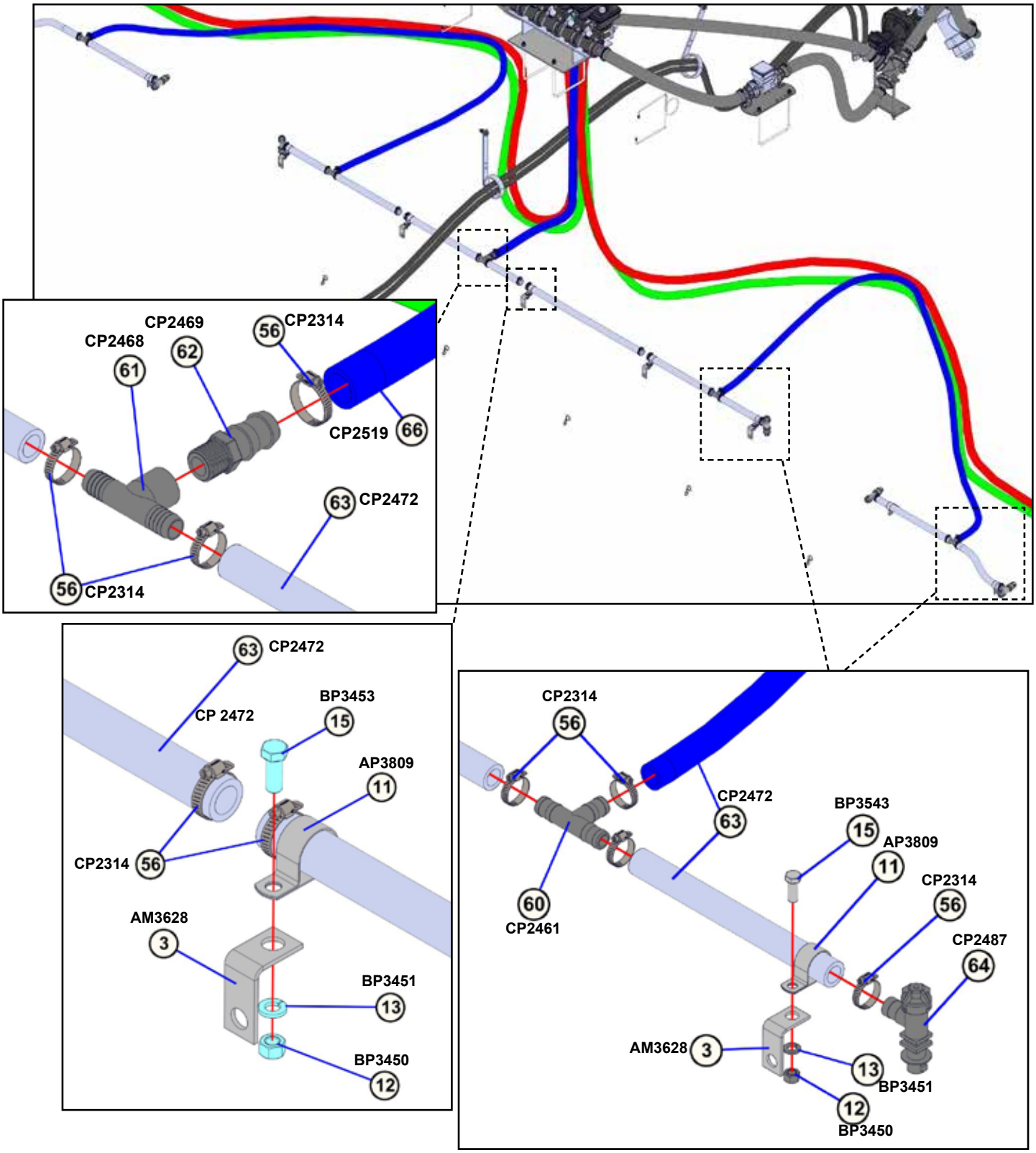

Centrifugal Pump and Plumbing Wings

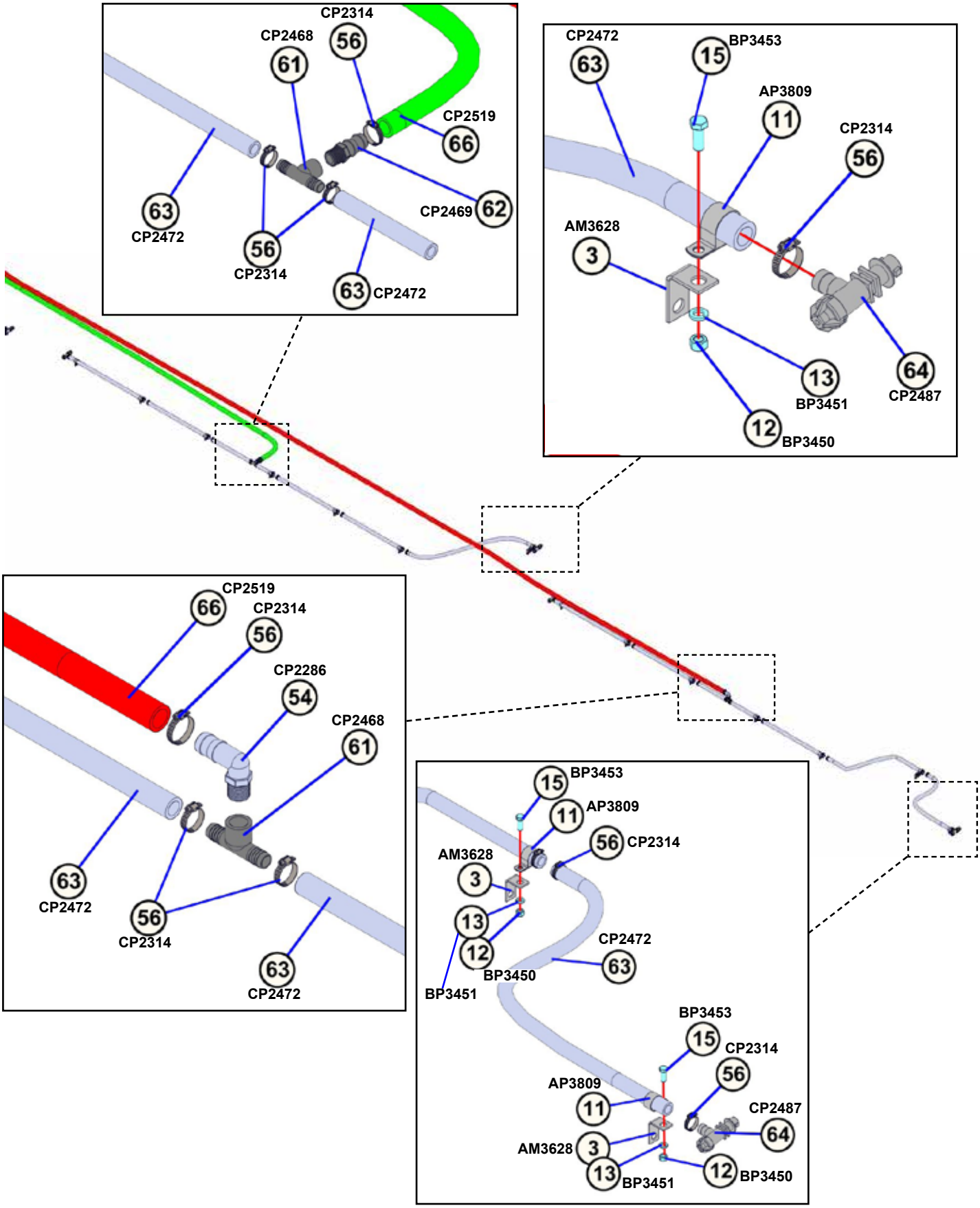

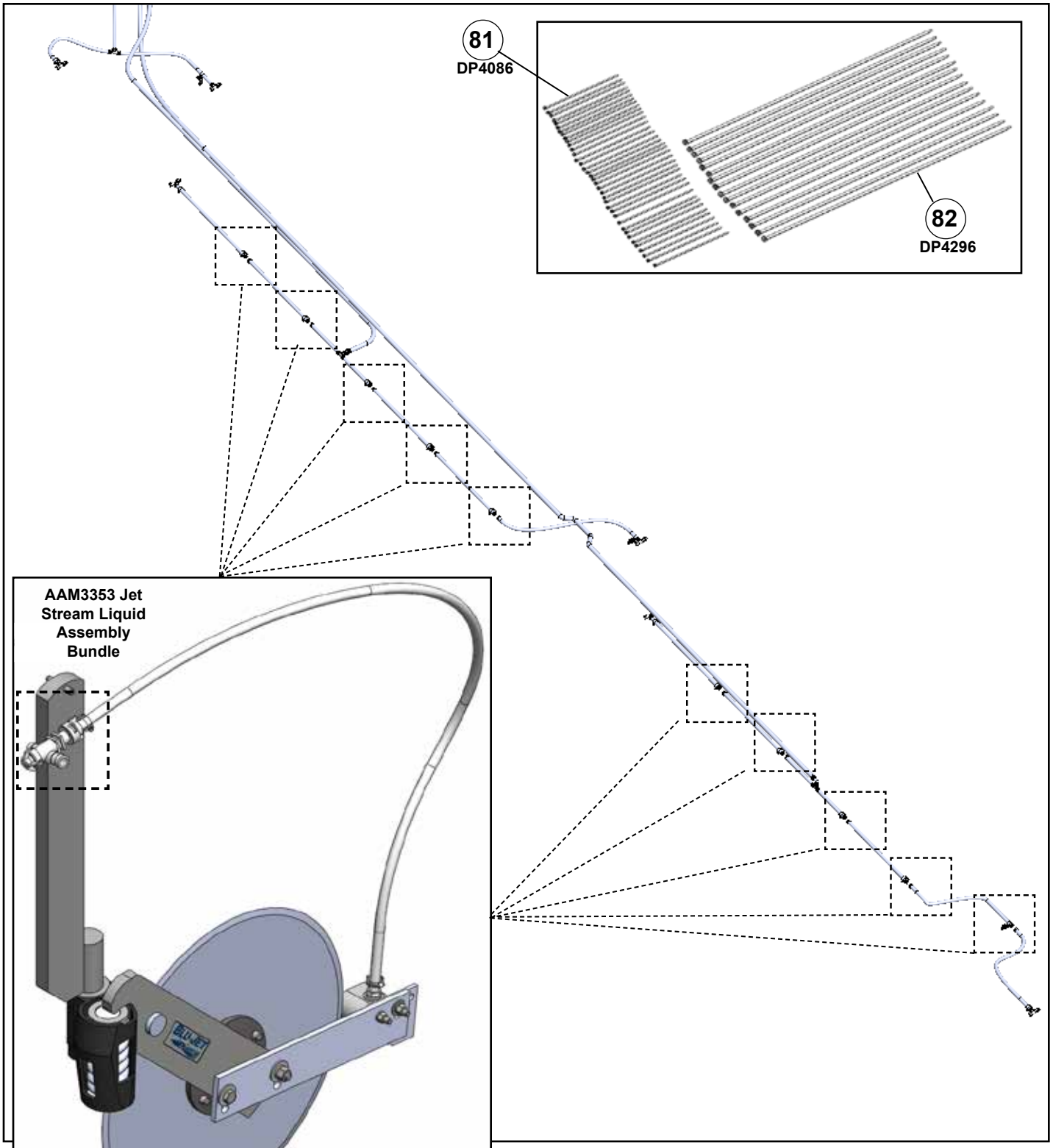
81
DP4086
82
DP4296
AAM3353 Jet Stream Liquid Assembly Bundle

► AAM3353 JETSTREAM LIQUID ASSEMBLY, TEE-JET CHECK, 1 ROW

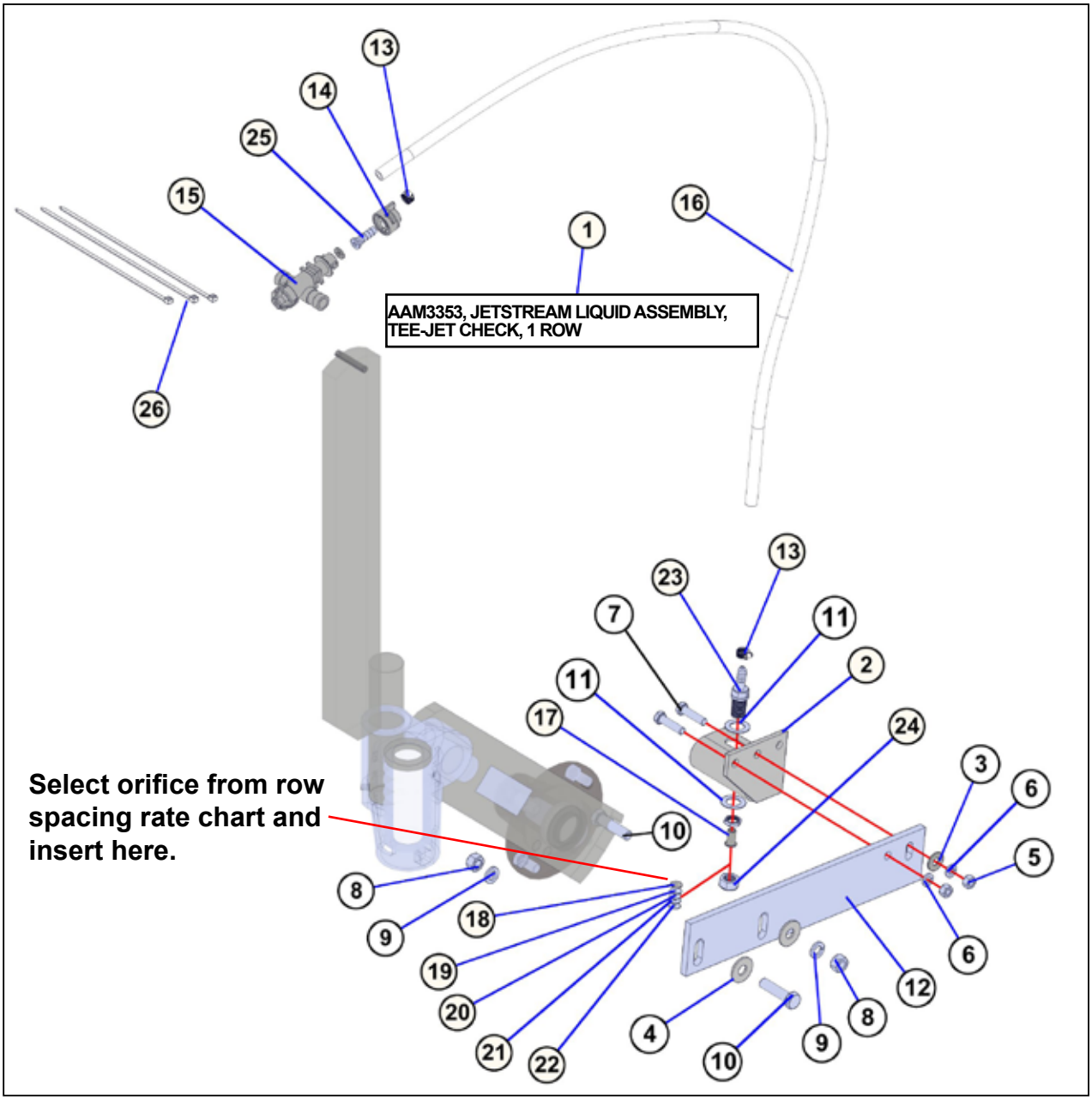

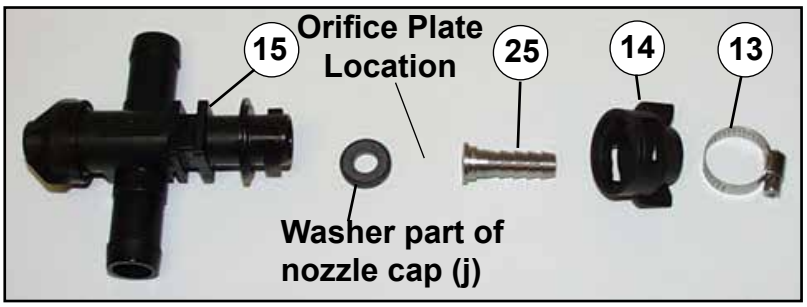

► AAM3353 JETSTREAM LIQUID ASSEMBLY, TEE-JET CHECK, 1 ROW

BOM ID	Qty	Item No	Description
1	1	AAM3353	JETSTREAM LIQUID ASSEMBLY TEE-JET CHECK, 1 ROW
2	1	AM3627	NOZZLE MOUNT, JETSTREAM, AT3000/ AT4000/ AT4600
3	1	BP3015	WASHER, FLAT, 3/8”, PLATED
4	2	BP3050	WASHER, FLAT, 1/2”, PLATED
5	2	BP3450	NUT, HEX, 3/8”-16, F594 GRADE 1
6	2	BP3451	WASHER, LOCK, 3/8”, 18-8 STAINLESS STEEL
7	2	BP3454	HEX CAP SCREW, 3/8”-16 X 1-1/2”, F593 GRADE 1
8	2	BP3455	NUT, HEX, 1/2”-13, F594 GRADE 1
9	2	BP3456	WASHER, LOCK, 1/2”, 18-8 STAINLESS STEEL
10	2	BP3459	HEX CAP SCREW, 1/2”-13 X 2”, F593 GRADE 1
11	2	BP3461	WASHER, FLAT, 5/8”, 1-1/2” OD, 0.078”, 18-8 STAINLESS STEEL
12	1	CM2305	JET STREAM MOUNTING ARM
13	2	CP2313	HOSE CLAMP, WORM GEAR, 1/4” - 5/8” TUBING, STAINLESS STEEL
14	1	CP2467	NOZZLE CAP, 25608-1-NYR
15	1	CP2488	DIAPHRAGM CHECK VALVE, DOUBLE SHANK, 3/4 HOSE
16	1	CP2534	HOSE, EVA, N 3/8” BRAID JET STREAM
17	1	CP2537	STREAM STABILIZER-STAINLESS STEEL JET STREAM
18	1	CP2541	ORIFICE PLATE #4916-63 JET STREAM
19	1	CP2542	ORIFICE PLATE #4916-70 JET STREAM
20	1	CP2543	ORIFICE PLATE #4916-78 JET STREAM
21	1	CP2544	ORIFICE PLATE #4916-86 JET STREAM
22	1	CP2545	ORIFICE PLATE #4916-95 JET STREAM
23	1	CP2578	NOZZLE BODY, STRAIGHT WITH NUT, 3/8” HOSE, STAINLESS STEEL
24	1	CP2589	NOZZLE CAP, STAINLESS STEEL
25	1	CP5046	HOSE BARB INSERT, 3/8”, STAINLESS STEEL
26	3	DP4086	CABLE TIE 11-3/8” STANDARD

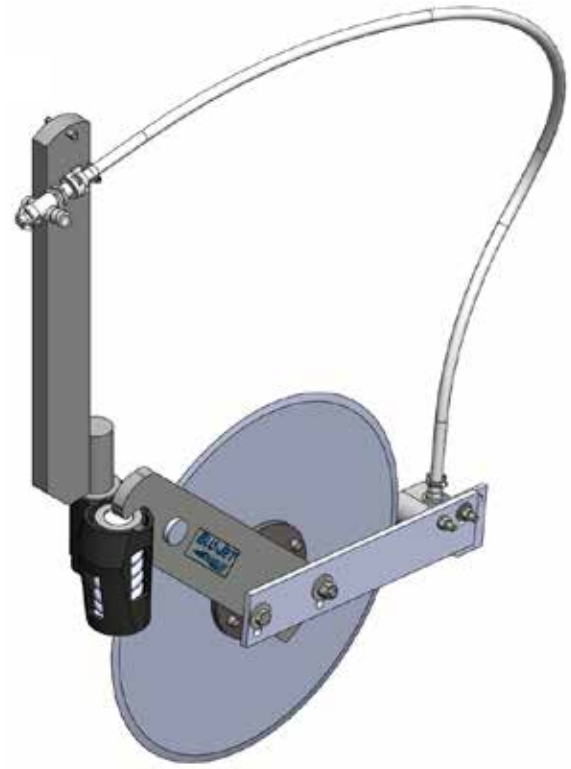

BLU-JET	JetStream Coulter Knife Assembly (AAM3356)		
AT7000	Task	Procedures	Illustrations

AAM3356
COULTER KNIFE ADAPTER
WITH KNIFE, TEE-JET CHECK

AAM33567
COULTER KNIFE ADAPTER
WITH CO-50 KNIFE

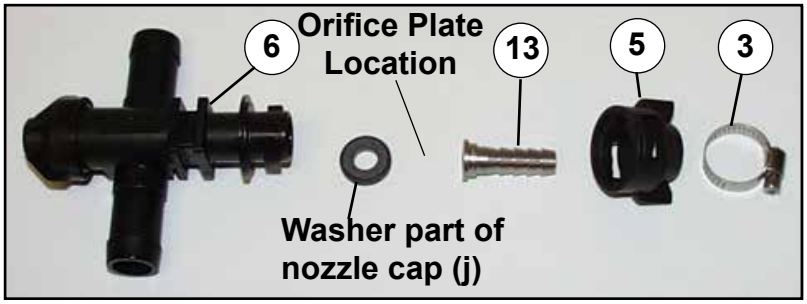

JetStream Coulter Knife Assembly (AAM3356)

► AAM3356 Coulter Knife Assembly, With Knife, Tee-Jet Check

BOM ID	Qty	Item No	Description
1	1	AAM3356	COULTER KNIFE ASSEMBLY, WITH KNIFE, CHECK VALVE
2	1	AAM3357	COULTER KNIFE ADAPTER, WITH CO-50 KNIFE
2A	1	AM3313	KNIFE HOLDER/ MOUNTING ARM
2B	1	AM3324	ADAPTER PLATE, COULTER KNIFE
2C	4	BP3041	HEX CAP SCREW, 1/2”-13 X 2”, GRADE 5, PLATED
2D	6	BP3042	NUT, HEX, 1/2”-13, GRADE 2, PLATED
2E	6	BP3043	WASHER, LOCK, 1/2”, PLATED
2F	6	BP3050	WASHER, FLAT, 1/2”, PLATED
2G	2	BP3126	HEX CAP SCREW, 1/2”-13 X 1-1/2”, GRADE 5, PLATED
3	2	CP2313	HOSE CLAMP, 1/4” - 5/8” TUBING, STAINLESS STEEL
4	1	CP2325	ORIFICE PLATE #4916-110 JET STREAM
5	1	CP2467	NOZZLE CAP, 25608-1-NYR
6	1	CP2488	DIAPHRAGM CHECK VALVE, DOUBLE SHANK, 3/4” HOSE
6A	1	CP2488-BODY	DIAPHRAGM CHECK VALVE BODY, DOUBLE SHANK, 3/4” HOSE
6B	1	CP2488-WASHER	DIAPHRAGM CHECK VALVE WASHER
7	1	CP2534	HOSE, EVA,N 3/8” BRAID JET STREAM
8	1	CP2544	ORIFICE PLATE #4916-86 JET STREAM
9	1	CP2545	ORIFICE PLATE #4916-95 JET STREAM
10	1	CP2570	ORIFICE PLATE #4916-120 JET STREAM
11	1	CP2571	ORIFICE PLATE #4916-136 JET STREAM
12	1	CP5038	CO-50 3/8” LIQUID KNIFE EXTRA THIN
13	1	CP5046	HOSE BARB INSERT, 3/8”, STAINLESS STEEL
14	3	DP4086	CABLE TIE 11-3/8”

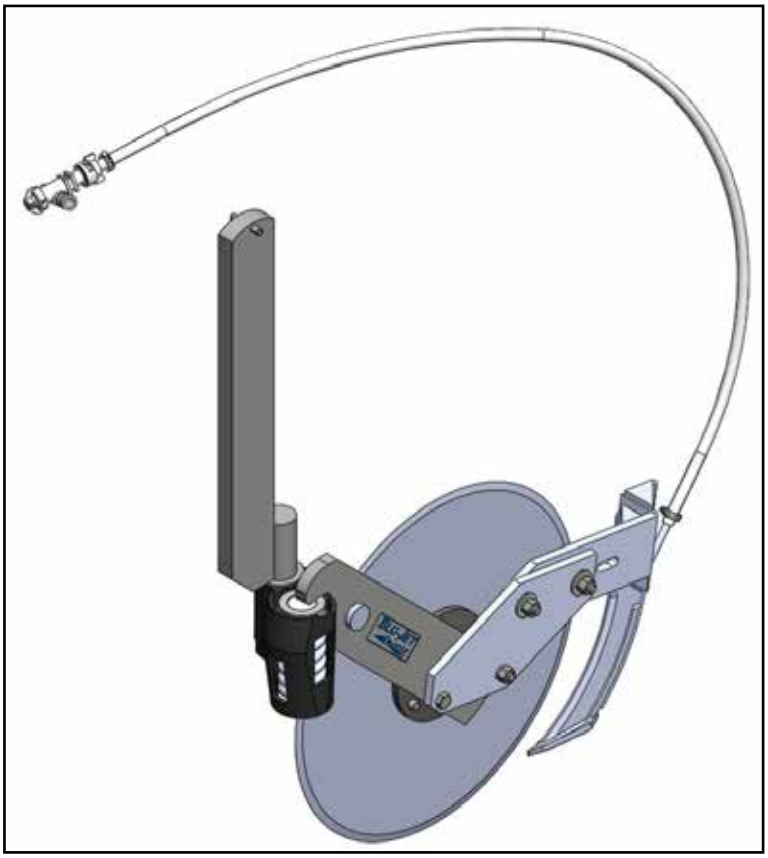

Specifications

Main Frame	Heavy Duty Integrated Welded Design
Hitch	Two Point Cat IV
HD 7 Section Tool Bar	2 Section Double 7 x 7 Tubular Plus Automatic Hydraulic Gull Wing During Turns-Standard
Tracks	Model 7340 **Track Assembly Manufactured By:** **Camoplast Solideal**
Rocker Assembly (Wheels)	**380/85R46, 165A6, 46 x 13 x 10** Tire Pressure 75 lbs. P.S.I. Max.
Tank	2750 and 1500 gallons
Vertical Pin Adjust Gauge Wheels Tire	25 x 7.50-15 Tire Pressure 32 lbs. P.S.I. Max.
Gauge Wheel Tire	2P155/80R12 Tire Pressure 35 lbs. P.S.I. Max.
Row spacings	37R30 49R20
Plumbing	Full Length 3/4” Parallel Manifold
Coulters	Super 1200 Coulters with 20” Smooth Blades
Blade Size	20” Smooth
Overall Length	32’
Transport Width	18’6”
Transport Height	11’8”
Empty Weight	37R30 35,000 lbs.
Hitch Weight in Transport	6,300 lbs. Folded 15,700 lbs. Unfolded

Tractor Requirements

Four Hydraulic Remotes	1,800 PSI
Electrical System	12 volt, with 7 Pin Connector

Standard
Water Tank/Toolbox
Lighting Kit

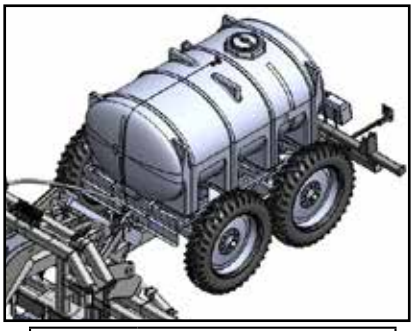

Walking Tandems Standard 2750 Gallons (10409 L) Tank	
33R30	Swath 960” (24.4 M)
37R30	Swath 1080” (27.4 M)
49R20	Swath 960” (24.4 M)
47R22	Swath 1056” (26.8 M)
49R22	Swath 1056” (26.8 M)

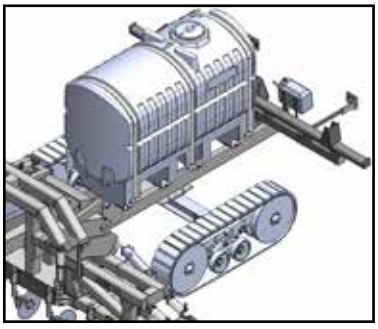

Tracks (Optional) 1500 Gallons (5678 L) Tank	
33R30	Swath 960” (24.4 M)
37R30	Swath 1080” (27.4 M)
49R20	Swath 960” (24.4 M)
47R22	Swath 1056” (26.8 M)
49R22	Swath 1056” (26.8 M)

Torque Specifications

NOTE: Use these torque's unless special torque's are specified. Values are for UNC and UNF thread fasteners, plated or un-plated, as received from supplier. Fasteners can be dry or lubricated with normal engine oil. Values do not apply if graphite, moly-disulphide or other extreme pressure lubricant is used.

SAE Grade No.	2				5				*8			
Bolt head identification (see Note 1)					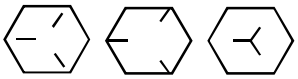							
Bolt Size	LB FT		Nm		LB FT		Nm		LB FT		Nm	
	Min.	Max.	Min.	Max	Min.	Max.	Min.	Max	Min.	Max.	Min.	Max
1/4	5	6	7	8	9	11	12	15	12	15	16	20
5/16	10	12	14	16	17	20.5	23	28	24	29	33	39
3/8	20	23	27	31	35	42	48	57	45	54	61	73
7/16	30	35	41	47	54	64	73	87	70	84	95	114
1/2	45	52	61	70	80	96	109	130	110	132	149	179
9/16	65	75	88	102	110	132	149	179	160	192	217	260
5/8	95	105	129	142	150	180	203	244	220	264	298	358
3/4	150	185	203	251	270	324	366	439	380	456	515	618
7/8	160	200	217	271	400	480	542	651	600	720	814	976
1	250	300	339	406	580	696	787	944	900	1080	1220	1464
1 1/8					800	880	1085	1193	1280	1440	1736	1953
1 1/14					1120	1240	1519	1681	1820	2000	2468	2712
1 3/8					1460	1680	1980	2278	2380	2720	3227	3688
1 1/2					1940	2200	2631	2983	3160	3560	4285	4827

*Thick nuts must be used with Grade 8 bolts

NOTE 1: Bolt head identification mark as per grade. Manufacturing marks will vary.

STANDARD TORQUE DATA
HYDRAULIC TUBES AND FITTINGS
O-ring boss Plugs, Adjustable Fitting
Lock nuts, Swivel JIC-37 degree Seats

SIZE	LB FT		Nm	
	Min.	Max.	Min.	Max.
4	6	10	8	14
5	10	15	14	20
6	15	20	20	27
8	25	30	34	41
10	35	40	47	54
12	60	70	81	95
14	70	80	95	109
16	80	90	108	122
20	95	115	129	156
24	120	140	163	190
32	250	300	339	407

Above torque figures are recommended for plain, cadmium or zinc plated fittings, dry or wet installations and swivel nuts either swaged or brazed.

Tie-rod Cylinder Disassembly - Assembly Procedure

AT7000

With cylinder removed from machine, clean, drained of oil and fully retracted, proceed as follows:

Disassembly:

1. **Secure cylinder in vice or other method to prevent rotation. With the immediate area clean of dirt so parts can be laid out.**
2. **Remove tie-rod nuts, item (1).**
3. **Pull rod assembly from cylinder. Remove tube item (3).**
4. **Loosen nut, item (4), and remove clevis, item (5), from rod assembly.**
5. **Place rod assembly in vice with copper or brass jaws so as not to damage.**
6. **Remove all seals from items (6), (8), and (9) for replacement. Clean and inspect all parts, for damage (nicks, scratches, cracks and etc.) replace as necessary. If you have any question please contact Prince Hydraulics (712) 235-1220.**

Reassembly:

1. **Replace all seals in items (6), (8), and (9). Do not replace small O-ring on ID of piston item, (8) until ready to attach rod, item (2).**
2. **Place small ID O-ring seal for piston over rod turndown and apply light coat of grease to seal. Slip piston, item (8) onto turndown with ID counter bore towards rod shoulder. Take care not to pinch O-ring between piston and rod shoulder. Replace nut, item (7), and secure.**
3. **Apply light coat of grease to seals in gland, item (6), and slip gland over rod end, carefully so as not to damage seals. Slip entire assembly into lightly oiled tube,k item (3), piston first. Insure tube slips up over OD seals of gland.**
4. **Take total assembly in step 3 and slip tube over OD seal on butt, item (9). Align ports in butt and gland and apply nuts, item (1), to tie-rods and toque uniformly.**
   <u>Tierod</u>
   3/8" tierods 20-23 ft./lbs. (27-31 Nm)
   1/2" tierods 45-52 ft./lbs. (61-70 Nm)
   5/8" tierods 95-105 ft./lbs. (129-142 Nm)
   3/4" tierods 150-165 ft./lbs (203-224 Nm)

5. **Test for leaks and reinstall in machine. If you have any problems contact Prince Hydraulics (712) 235-1220.**

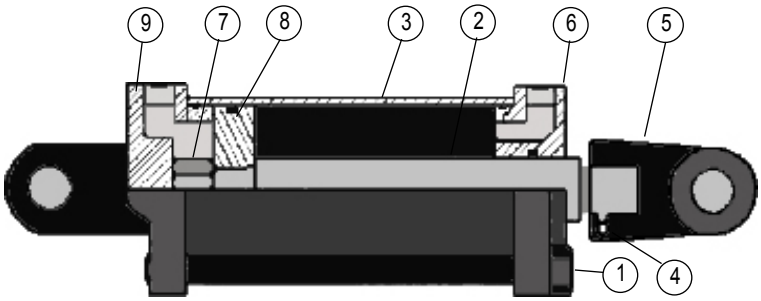

WARNING Make sure you perform the required service and adjustments correctly. Failure will damage machine or injure operator.

6. **The hydraulic system MUST have the air removed from the system after initial machine set-up or following the repair of replacement of any part of the system.**

7. **Connect implement to the tractor draw bar correctly before operating or making any adjustments.**

TMC #	Stroke	Repair Kit	Clevis	Butt	Gland
SAE-34020 DP4375	4” X 20”	PMCK-SAE-34000 DP4310	100000326 DP4115	141900037 DP4270	081900354 DP4326
SAE-35008 DP4491	5” X 8”	PMCK-SAE-35000 DP4355	100000362 DP4114	142100050 DP4314	082100274 DP 4356
SAE-33008 DP4494	3” X 8”	PMCK-SAE-33000 DP4308	100000423 DP4116	141500043 DP4250	081500323 DP4324
SAE-34008 DP4552	4” X 8”	PMCK-SAE-34000 DP4310	100000326 DP4115	141900037 DP4270	081900354 DP 4326
B450200BCDDA07A DP4579	4-1/2” x 20”	B450000 DP4503	100000362 DP4114	14200075G DP4507	0820BCASG DP4508
B200060ABAAA03B DP4553	2” x 6”	PMCK-B20000 DP4470	100000423 DP4116	1411005SF DP4587	0811ABCSF DP4588

TMC #	Stroke	Piston	*4 Req* Piston Rod	*2 Req* Barrel	*4 Req* Tie Rod	Clevis Pin	Cotter Pin
SAE-34020 DP4375	4” X 20”	071900260 DP4328	011000323 DP4357	051900014 DP4353	170301252 DP4354	190400035 BP3497	220001504 BP3511
SAE-35008 DP4491	5” X 8”	072100243 DP4331	011100721 DP4451	052100010 DP4452	170401137 DP4453	190600024 BP3498	220001504 BP3511
SAE-33008 DP4494	3” x 8”	071500244 DP4330	010700431 DP4429	051500007 DP4430	170201121 DP4431	190400001 BP3403	220001504 BP3511
SAE-34008 DP4552	4” 8”	071900260 DP4328	011000318 DP4448	051900008 DP4449	170301132 DP4450	190400035 BP3497	220001504 BP 3511
B450200BCDDA07A DP4579	4-1/2” x 20”	072000081 DP4509	011126625A DP4582	052023125A DP4583	170301257 DP4585	190600024 DP3498	220001504 DP3511
B200060ABAAA03B DP4553	2” x 6”	071100157 DP4474	010509750A DP4585	051108063A DP4586	170103101 DP4589	190400001 BP3403	220001504 BP3511

20 Inch Spacing Rate Chart

Orifice #	PSI	GPM 10.65 lb./gal 28%	Gallons per Acre 20 Inch Spacing							
			5 mph	6 mph	7 mph	8 mph	9 mph	10 mph	11 mph	12 mph
4916 49	60	0.320	19.0	15.8	13.6	11.9	10.5	9.5	8.6	7.9
	80	0.369	21.9	18.3	15.7	13.7	12.2	11.0	10.0	9.1
	100	0.413	24.5	20.4	17.5	15.3	13.6	12.3	11.1	10.2
	120	0.452	26.8	22.4	19.2	16.8	14.9	13.4	12.2	11.2
4916 57	60	0.432	25.7	21.4	18.3	16.1	14.3	12.8	11.7	10.7
	80	0.499	29.7	24.7	21.2	18.5	16.5	14.8	13.5	12.4
	100	0.558	33.2	27.6	23.7	20.7	18.4	16.6	15.1	13.8
	120	0.612	36.3	30.3	25.9	22.7	20.2	18.2	16.5	15.1
*4916 63	60	0.528	31.4	26.1	22.4	19.6	17.4	15.7	14.3	13.1
	80	0.610	36.2	30.2	25.9	22.6	20.1	18.1	16.5	15.1
	100	0.682	40.5	33.8	28.9	25.3	22.5	20.3	18.4	16.9
	120	0.747	44.4	37.0	31.7	27.7	24.7	22.2	20.2	18.5
*4916 70	60	0.652	38.7	32.3	27.7	24.2	21.5	19.4	17.6	16.1
	80	0.753	44.7	37.3	32.0	28.0	24.9	22.4	20.3	18.6
	100	0.842	50.0	41.7	35.7	31.3	27.8	25.0	22.7	20.8
	120	0.922	54.8	45.7	39.1	34.2	30.4	27.4	24.9	22.8
*4916 78	60	0.810	48.1	40.1	34.4	30.1	26.7	24.0	21.9	20.0
	80	0.935	55.5	46.3	39.7	34.7	30.9	27.8	25.2	23.1
	100	1.045	62.1	51.7	44.4	38.8	34.5	31.0	28.2	25.9
	120	1.145	68.0	56.7	48.6	42.5	37.8	34.0	30.9	28.3
*4916 86	60	0.984	58.5	48.7	41.8	36.5	32.5	29.2	26.6	24.4
	80	1.137	67.5	56.3	48.2	42.2	37.5	33.8	30.7	28.1
	100	1.271	75.5	62.9	53.9	47.2	41.9	37.7	34.3	31.5
	120	1.392	82.7	68.9	59.1	51.7	45.9	41.3	37.6	34.5
*4916 95	60	1.201	71.4	59.5	51.0	44.6	39.6	35.7	32.4	29.7
	80	1.387	82.4	68.7	58.8	51.5	45.8	41.2	37.4	34.3
	100	1.551	92.1	76.8	65.8	57.6	51.2	46.1	41.9	38.4
	120	1.699	100.9	84.1	72.1	63.1	56.1	50.5	45.9	42.0
4916 107	60	1.524	90.5	75.4	64.7	56.6	50.3	45.3	41.1	37.7
	80	1.760	104.5	87.1	74.7	65.3	58.1	52.3	47.5	43.5
	100	1.967	116.9	97.4	83.5	73.0	64.9	58.4	53.1	48.7
	120	2.155	128.0	106.7	91.4	80.0	71.1	64.0	58.2	53.3
4916 120	60	1.917	113.8	94.9	81.3	71.2	63.2	56.9	51.7	47.4
	80	2.213	131.5	109.5	93.9	82.2	73.0	65.7	59.8	54.8
	100	2.474	147.0	122.5	105.0	91.9	81.7	73.5	66.8	61.2
	120	2.710	161.0	134.2	115.0	100.6	89.4	80.5	73.2	67.1

Wheel Assembly (Main Frame)

AT7000	Task	Procedures	Illustrations
►	**Main frame**	**1. Place (a) (AM7105) AT7000 frame on two sturdy 35" assembly stands**	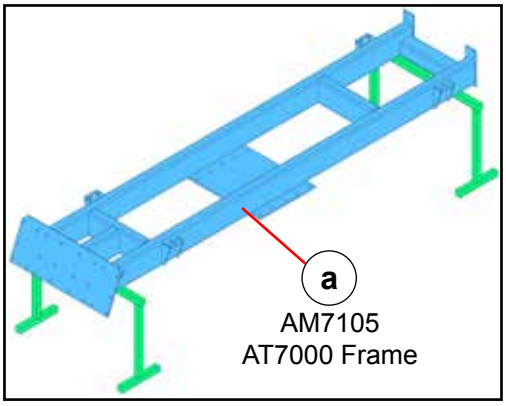
⚠	**WARNING** **Keep bystanders away during assembly**		
►	***NOTE:*** ***Right-hand and Left-hand as viewed from the rear***		
►	**Installation of axle pivot bushings**		

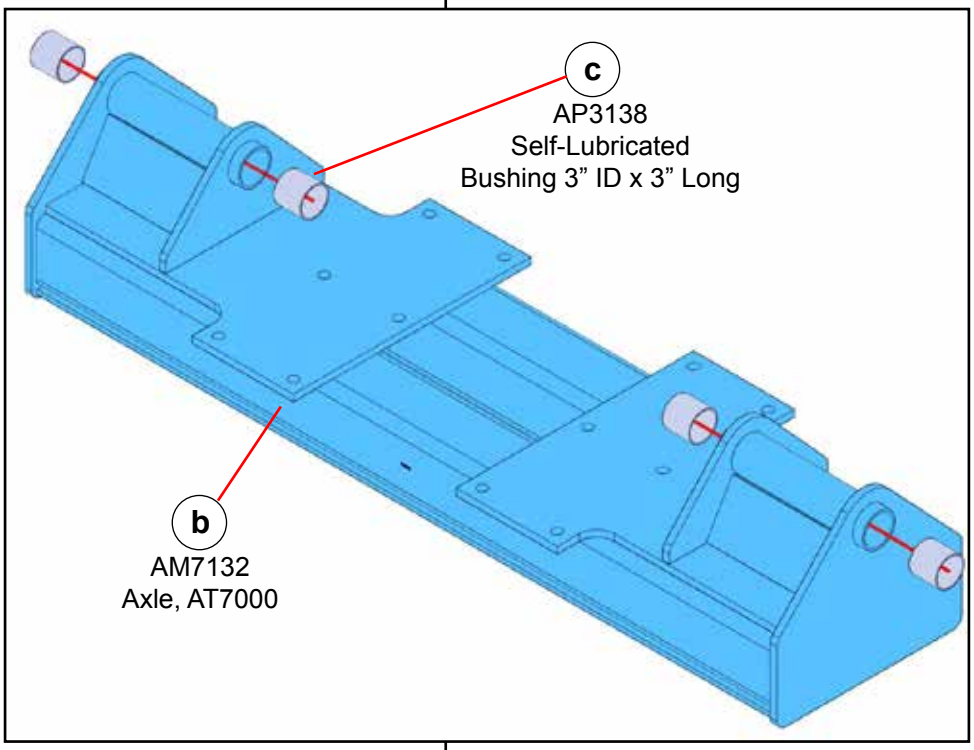

2. Install (c) (AP3138) self-lubricated bushings into (b) (AM7132) AT7000 axle.

Wheel Assembly (Axle Mounting)

AT7000	Task	Procedures	Illustrations

Axle Mounting

WARNING
Keep bystanders away during assembly

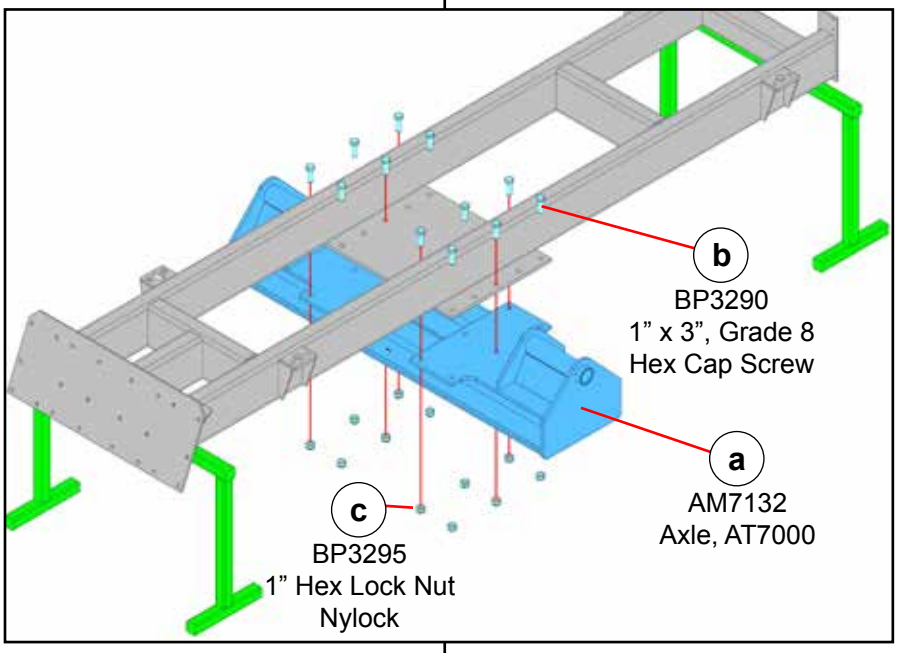

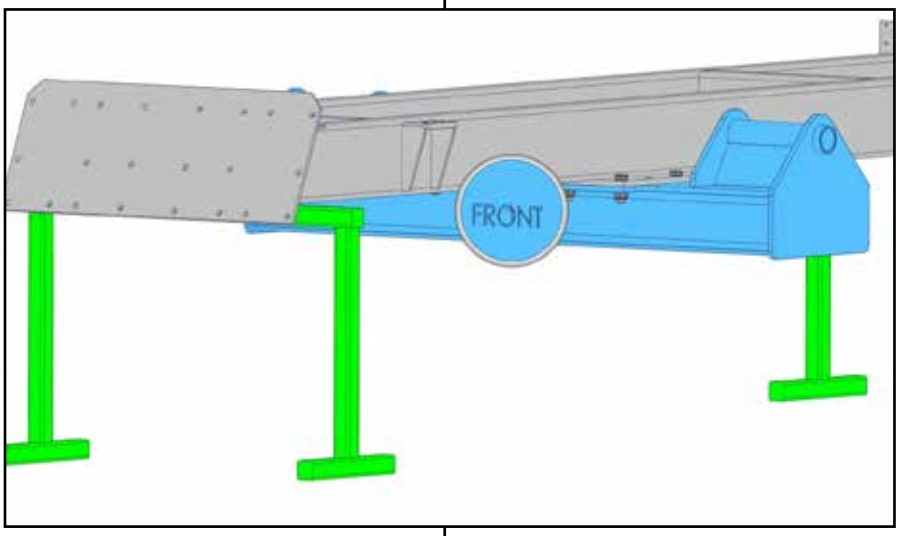

1. **Mount (a) (AM7132) AT7000 axle with the Front marking on the axle facing the connector plate.**

2. **Raise axle into position under frame mounting plate and insert (b) (BP3290) 1” x 3”, grade 8, hex cap screws. Secure with (c) (BP3295) 1” hex lock nuts, Nylock.**

Wheel Assembly (Rocker Mounting)

AT7000	Task	Procedures	Illustrations
►	**Attaching the rocker to axle**		

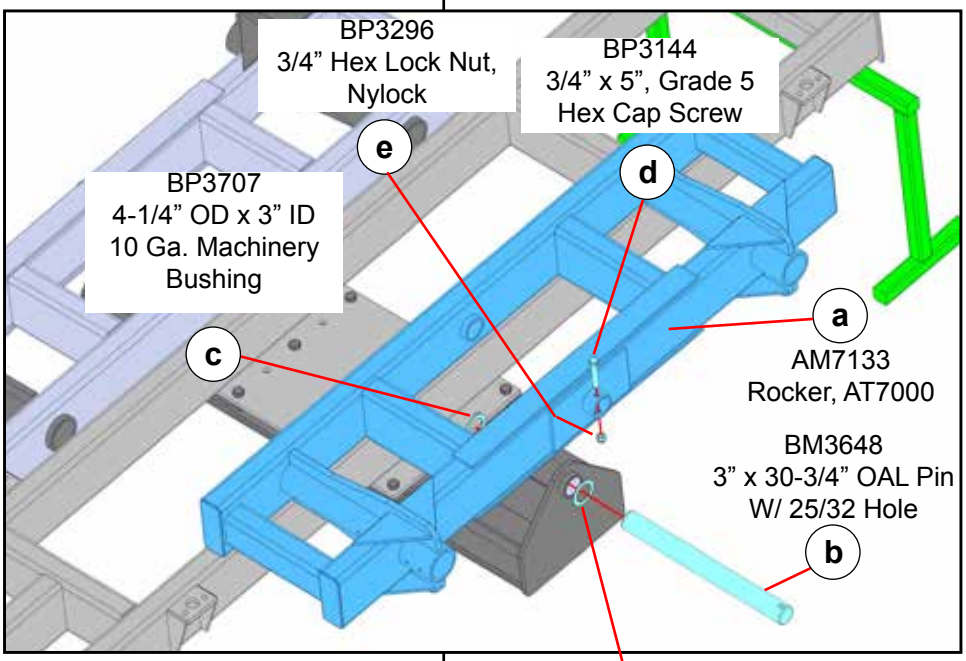

1. **Position (a) (AM7133) AT7000 rocker over axle.**
2. **Spray lubricant in rocker mounting hole. Insert (b) (BM3648) 3” x 30-3/4” pin. As pin is inserted place (c) (BP3707) 4-1/4” OD x 3” ID, 10 Ga. machinery bushings on each side of the axle mounting as space allows.**
3. **If the pin is hammered into position insert (d) (BP3144) 3/4” x 5”, grade 5, hex cap screw into hole to prevent the pin hole from mushrooming.**
4. **Align pin hole with rocker weldment hole and insert (d) (BP3144) 3/4” x 5”, grade 5, hex cap screw. Secure with (e) (BP3296) 3/4”, hex lock nut, Nylock.**

Wheel Assembly (Hub and Spindle Mounting)

AT7000	Task	Procedures	Illustrations

Mounting hub and spindle

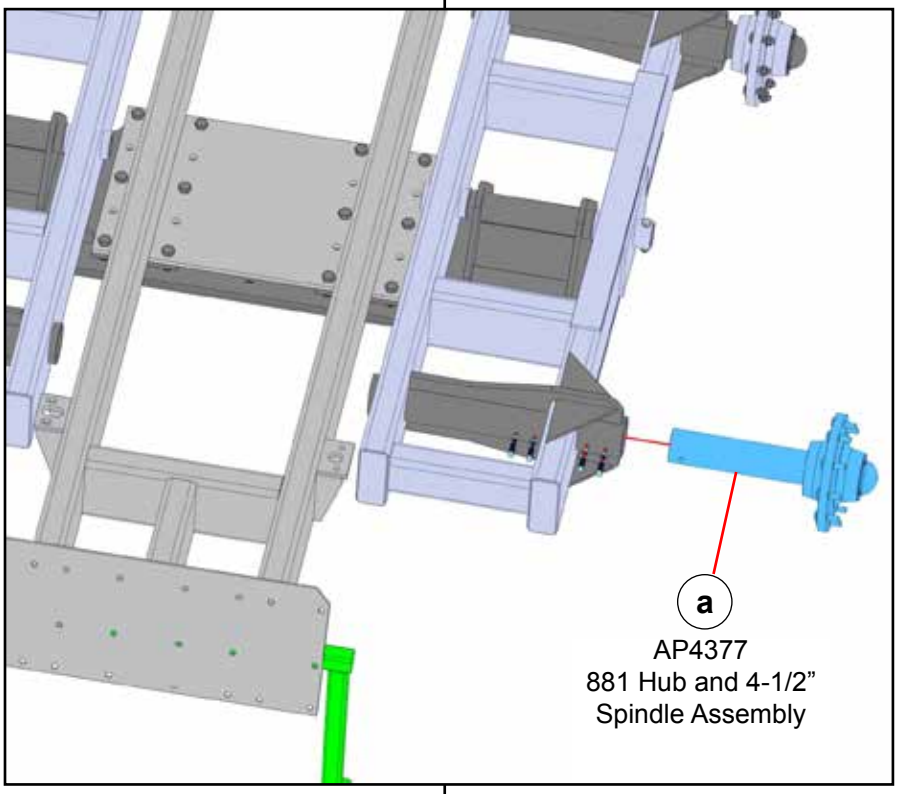

1. **Spray lubricate in spindle weldment tube.**
2. **Turn set screws out before inserting hub and spindle assembly.**
3. **Insert (a) (AP4377) 881 hub and 4-1/2” spindle assembly into spindle weldment.**
4. **Position the face of the hub 11-1/4” from the edge of the spindle tube.**
5. **Secure the set screws.**

Wheel Assembly (Mounting Wheels)

AT7000	Task	Procedures	Illustrations

Mounting wheels

NOTE:
Right-hand and Left-hand as viewed from the rear

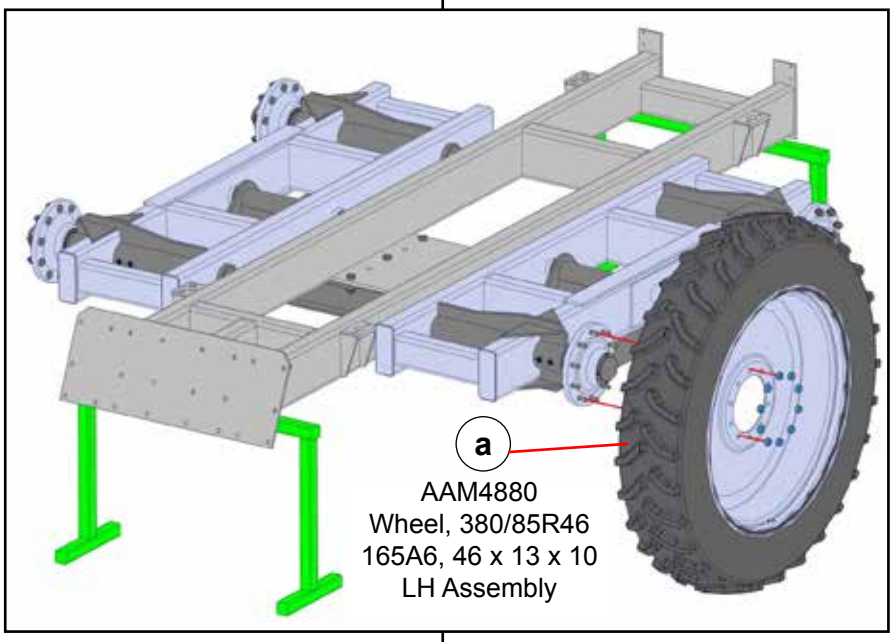

NOTE:
Torque: 250-265 LB FT

Tire Pressure: 75 psi. Max.

1. **Remove 3/4" flange hex nuts from hub.**
2. **Place (a) Left-hand wheel assembly and (b) Right-hand wheel assembly on the forklift teeth with the valve stems to the outside.**
3. **Raise and mount on hubs.**
4. **Replace 3/4" flange hex nuts and torque to 250-265 LB. FT.**
5. **Check tire pressure.**

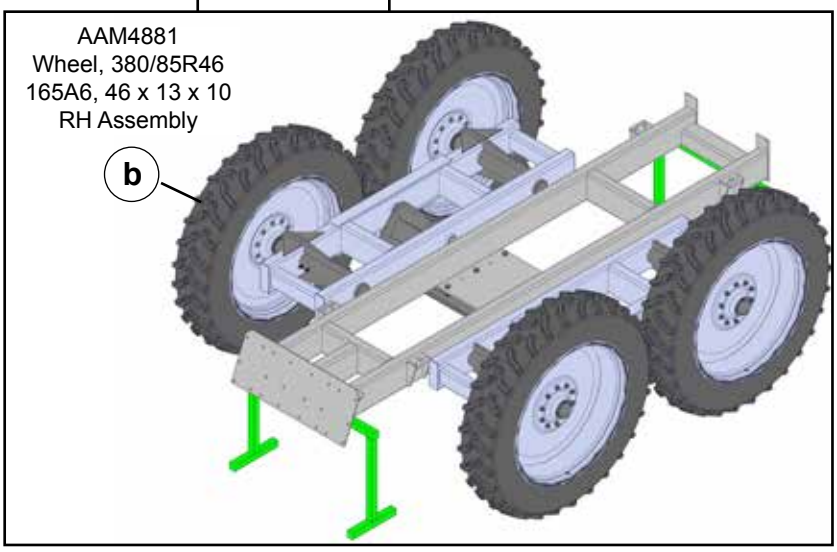

Assembly (Mounting Tank)
Wheel or Track Main Frame

AT7000	Task	Procedures	Illustrations
►	**Mounting tank**		
► **Torque 3/4" Grade 8 LB. FT. Min. 380 Max. 456**			

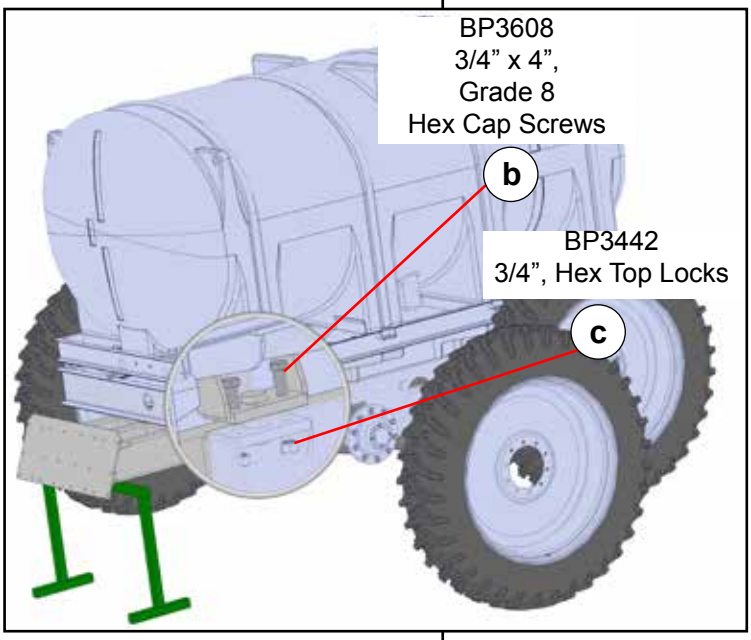

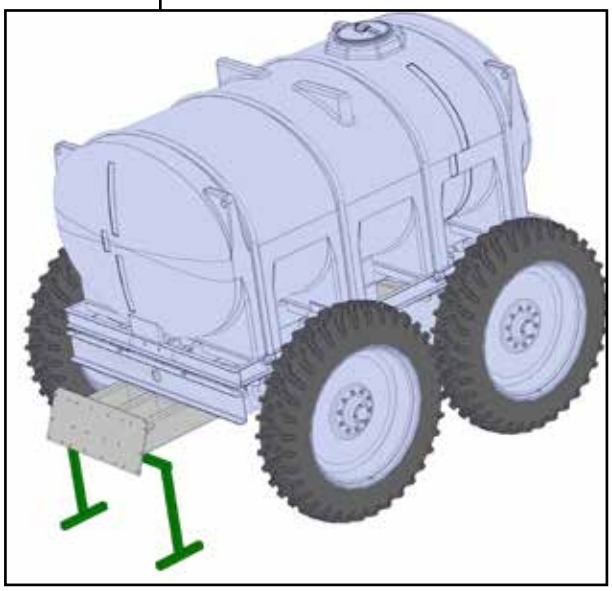

1. **Raise frame and remove front stand.**
2. **Position tank & saddle on frame mount. Secure to frame with eight (a) (BP3608) 3/4" x 4", grade 8, hex cap screws and (b) (BP3442) 3/4" hex top locks.**
3. **Replace front stand.**

Tracks Assembly (Main Frame)

AT7000	Task	Procedures	Illustrations
▶	**Main frame**	**1. Place (a) (AM7105) AT7000 frame on two sturdy 35" assembly stands**	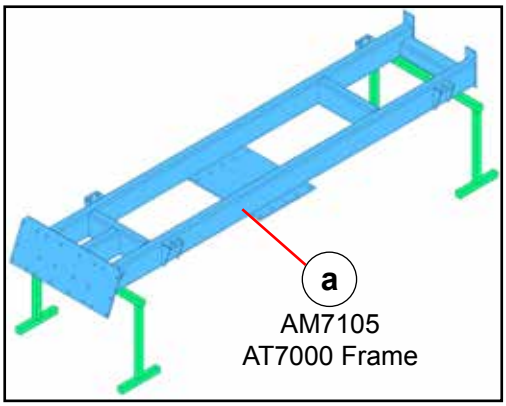
⚠	**WARNING** **Keep bystanders away during assembly**		
▶	***NOTE:*** ***Right-hand and Left-hand as viewed from the rear***		
▶	**Installation of axle pivot bushings**		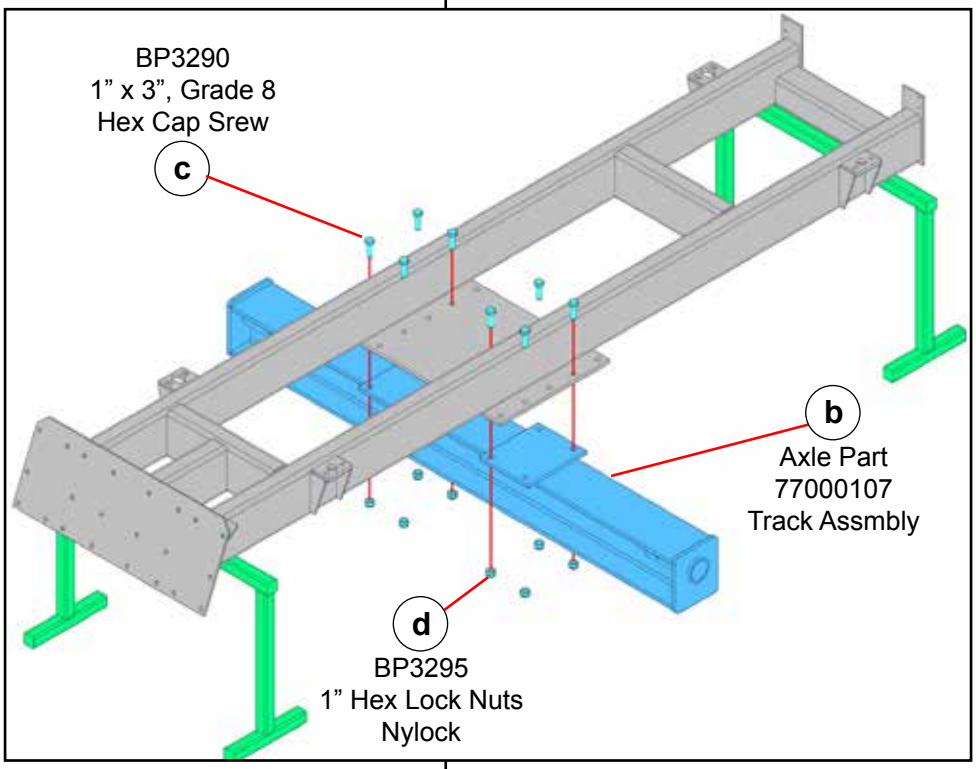
▶	**Track axle mounting**		
			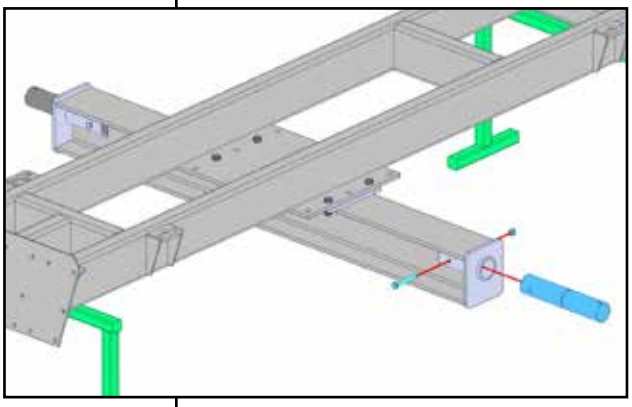

2. Raise (b) axle into position under frame mounting plate and insert (c) (BP3290) 1" x 3", grade 8, hex cap screws. Secure with (d) (BP3295) 1" hex lock nuts, Nylock.

3. Install stub shaft and secure with track assembly hardware. Consult track vendors instruction manual for parts ID and discriptions. (CAMOPLAST SOLIDEAL)

Tracks Assembly (Track Assembly Mounting)

AT7000	Task	Procedures	Illustrations

► **Track assembly mounting**

1. **Mount track assemblies on stub shaft and secure with track vendors hardware. Consult track vendors instruction manual for parts ID and discriptions. (CAMOPLAST SOLIDEAL)**

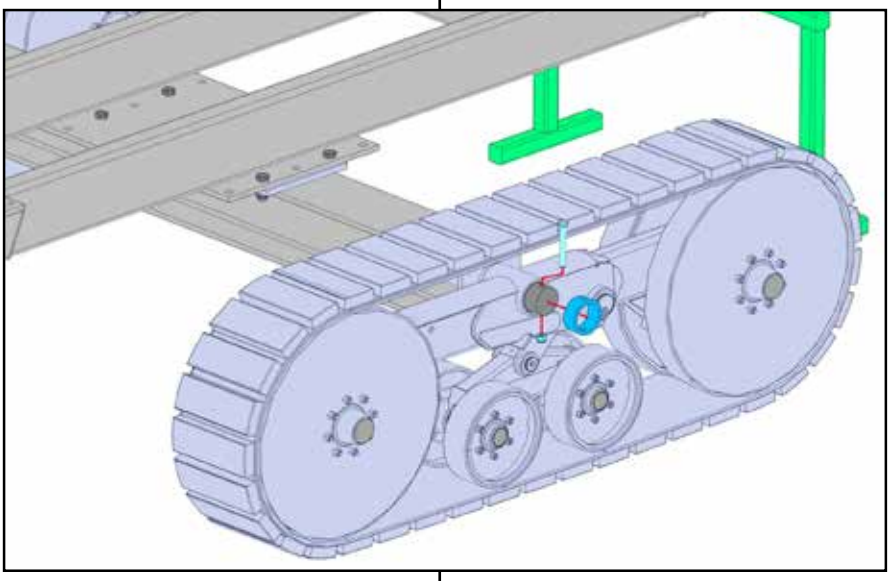

2. **Position (a) (AP3107) tank & saddle on frame mount. Secure to frame with eight (b) (BP3608) 3/4" x 4", grade 8, hex cap screws and (c) (BP3442) 3/4" hex top locks.**

► **Torque 3/4" Grade 8**
LB. FT.
Min. 380 Max. 456

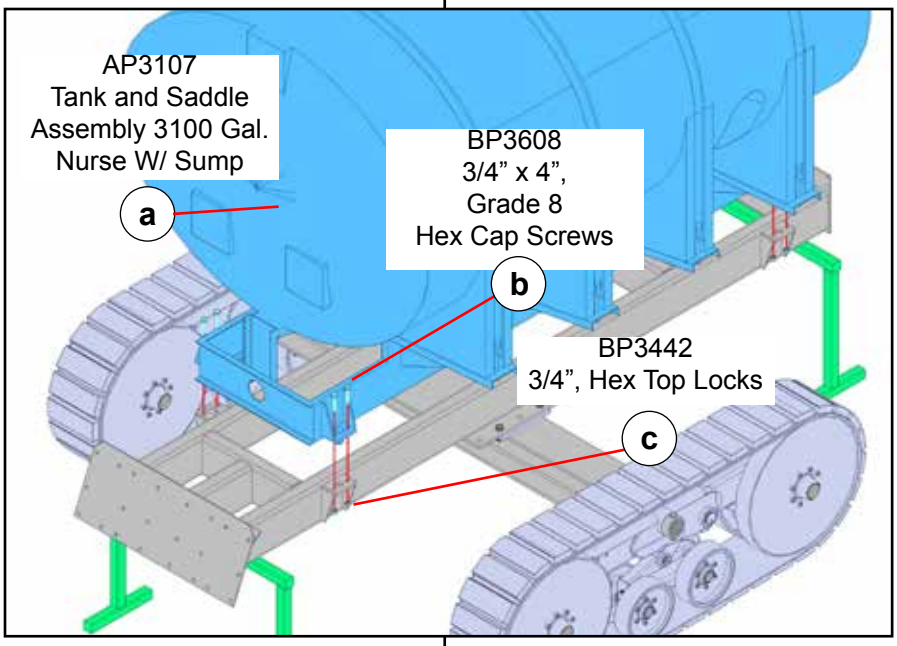

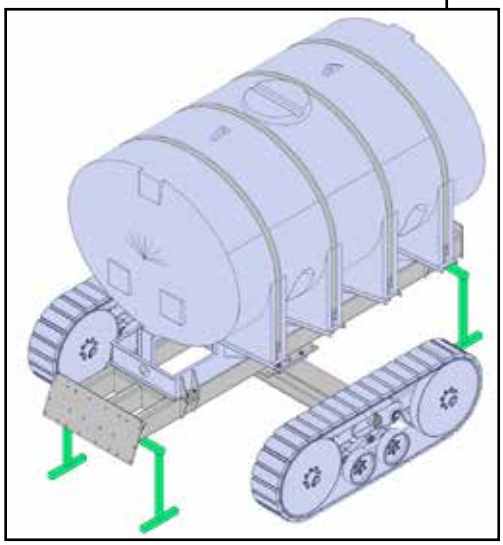

Assembly (Attaching Frame Connector) Wheel or Track Main Frame

AT7000	Task	Procedures	Illustrations

► **Attaching frame connector**

AM7122
Frame Connector
AT7000, Reinforced

a

BP3441
3/4" x 2",
Grade 8
Hex Cap Screws

b

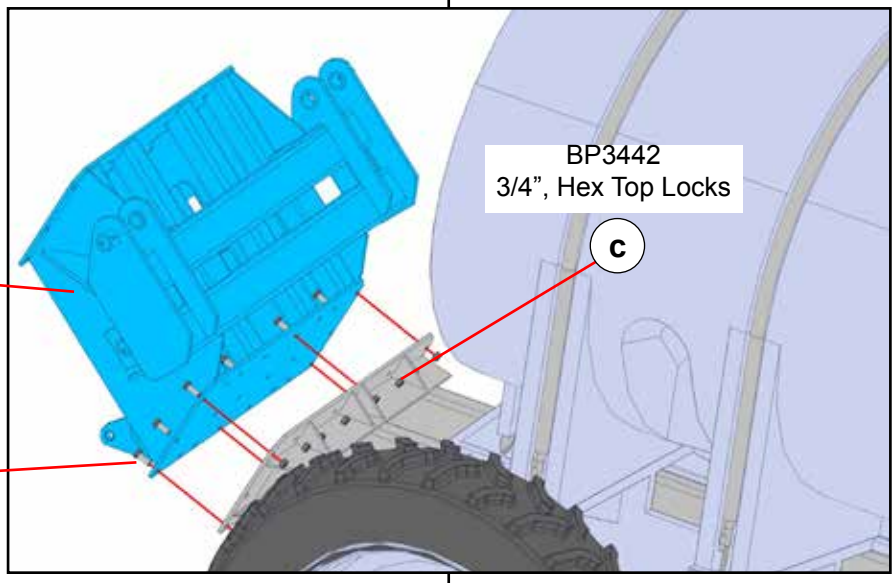

1. **Secure (a) (AM7122) frame connector forklift teeth.**
2. **Raise into position on frame connector plate.**
3. **Secure with (b) (BP3441) 3/4" x 2", grade 8, hex cap screws and (c) (BP3442) 3/4" hex lock nuts, top lock, grade C.**

► **Torque 3/4" Grade 8**
LB. FT.
Min. 380 Max. 456

Assembly (Attaching Tongue) Wheel or Track Main Frame

AT7000	Task	Procedures	Illustrations

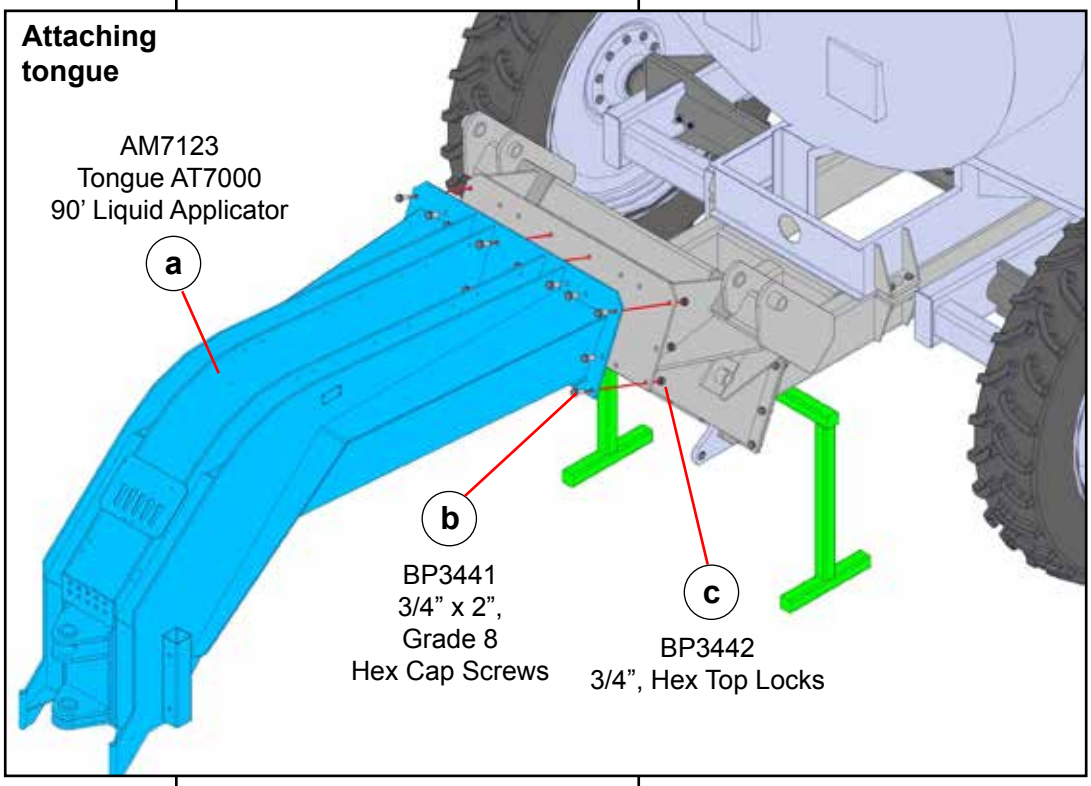

1. **Raise (a) (AM7123) AT7000 tongue 90' liquid applicator into position on frame connector mounting.**

2. **Secure with (b) (BP3441) 3/4" x 2", grade 8, hex cap screws and (c) (BP3442) 3/4" hex lock nuts, top lock, grade C.**

► Torque 3/4" Grade 8
LB. FT.
Min. 380 Max. 456

Assembly (Lower Lift Arm) Wheel or Track Main Frame

Task	Procedures	Illustrations

Attaching lower lift arm

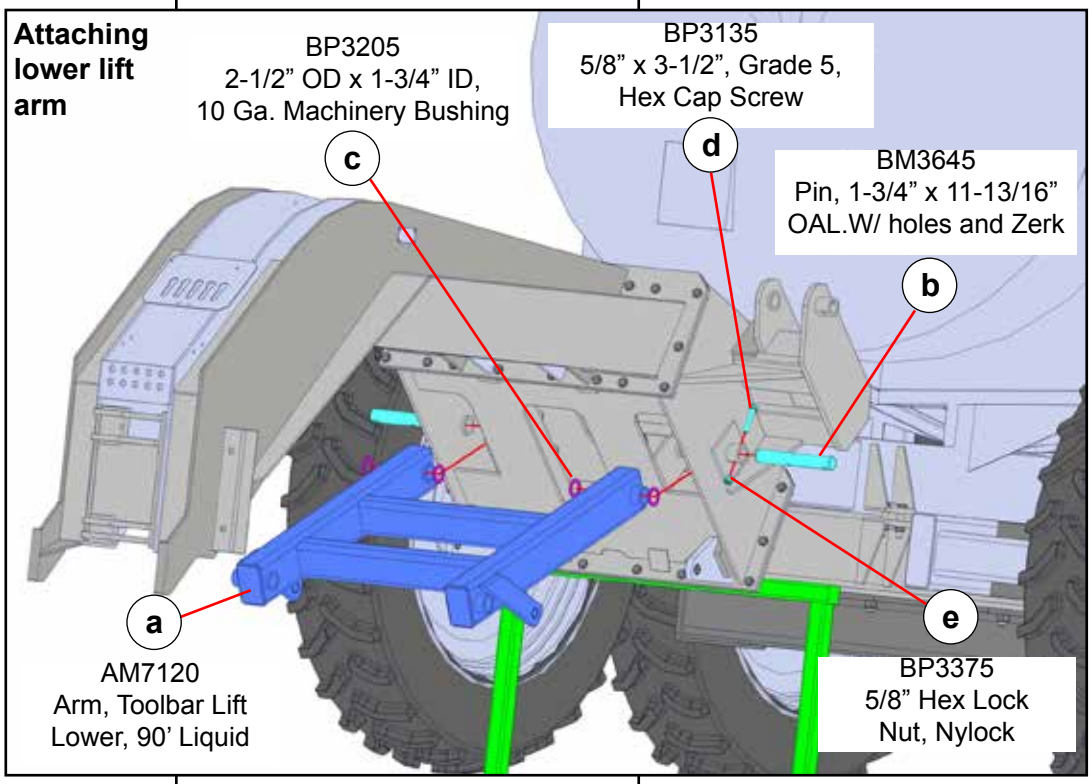

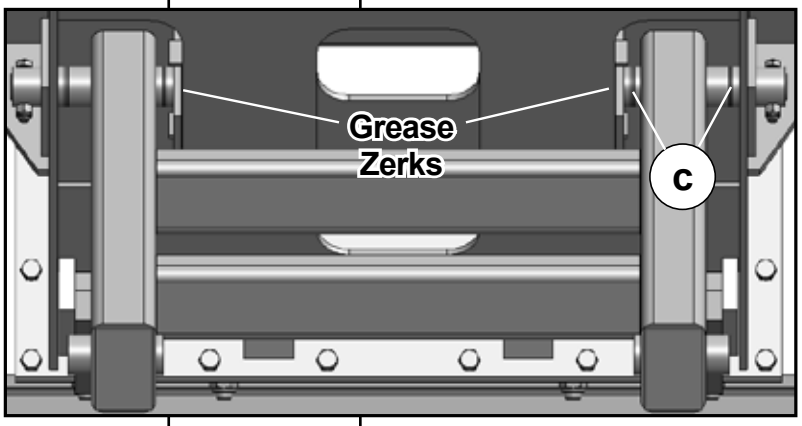

1. **Position lift arms (a) (AM7120) lower lift arm into frame connector. Insert (b) (BP3645) 1-3/4" x 11-13/16" pins, grease zerk to the inside, of frame. Place (c) (BP3205) 2-1/2" ID x 1-3/4" OD 10 GA. machinery bushing on each side of the lift arm mount.**

2. **Secure pins with (d) (BP3135) 5/8" x 3-1/2" hex cap screws and (e) (BP3375) 5/8" hex lock nuts, Nylock.**

Assembly (Lift Arm Cylinder Mounting) Wheel or Track Main Frame

AT7000	Task	Procedures	Illustrations
►	**Preparing hydraulic lift cylinders before installation**	**1. Remove cylinder plugs from cylinder (fig a).** **2. Place cylinder, plug side down, over oil pan and pull cylinder rod in and out until the oil is removed (fig. b). In extended position, replace cylinder plugs loosely to prevent foreign matter from entering cylinder until fittings can be installed.**	Generic Examples *a.* 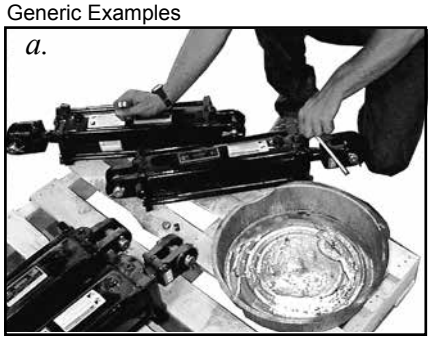 *b.* 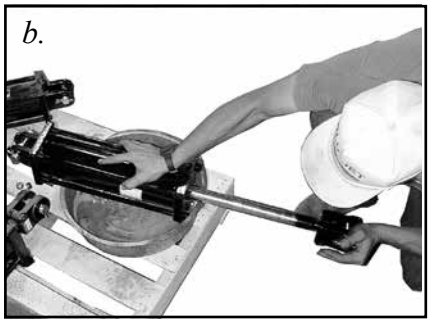
►	**Attaching lift cylinders**	**3. Install (a) (BP3516) 1-1/4" x 1" x 1" OAL tension bushings in connector weldment.** **4. Raise the lift arm assembly. Attach butt end (b) (DP4491) 5" x 8" hydraulic cylinder to main frame weldment with cylinder pins and cotter keys provided with cylinders.** **5. Extend rod end of the cylinder and attached to the lift arm. Secure with cylinder pins and cotter keys provided with cylinders.**	

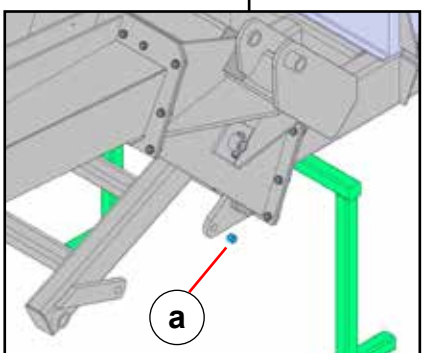

BP3516
Tension Bushing
1-1/4" X 1" X 1" OAL

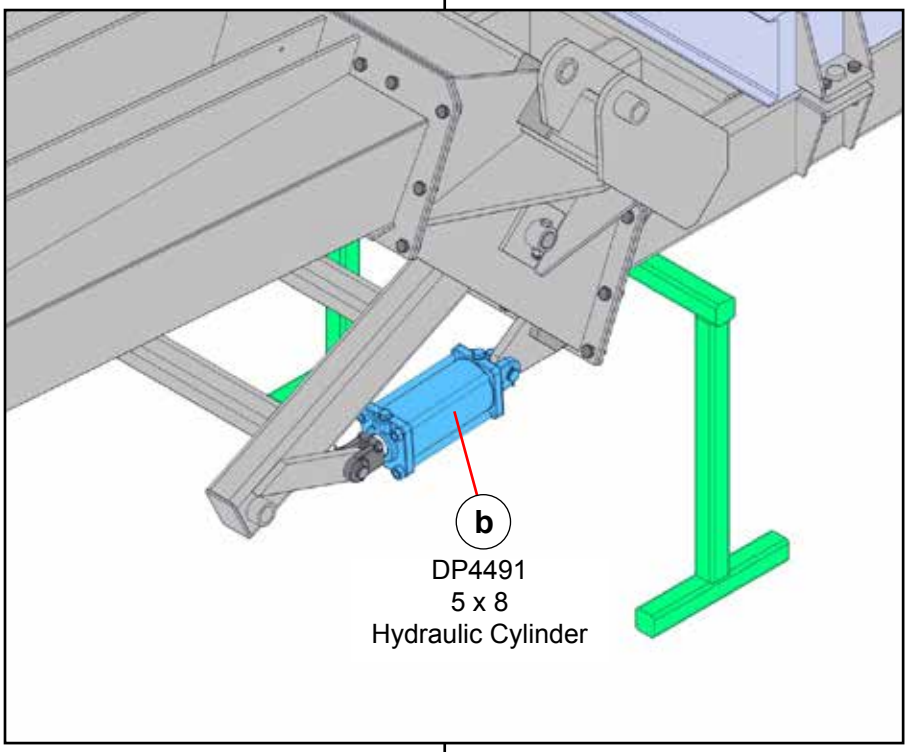

DP4491
5 x 8
Hydraulic Cylinder

Assembly (Attaching Upper Lift Arms) Wheel or Track Main Frame

AT7000	Task	Procedures	Illustrations
►	**Attaching upper lift arms**		

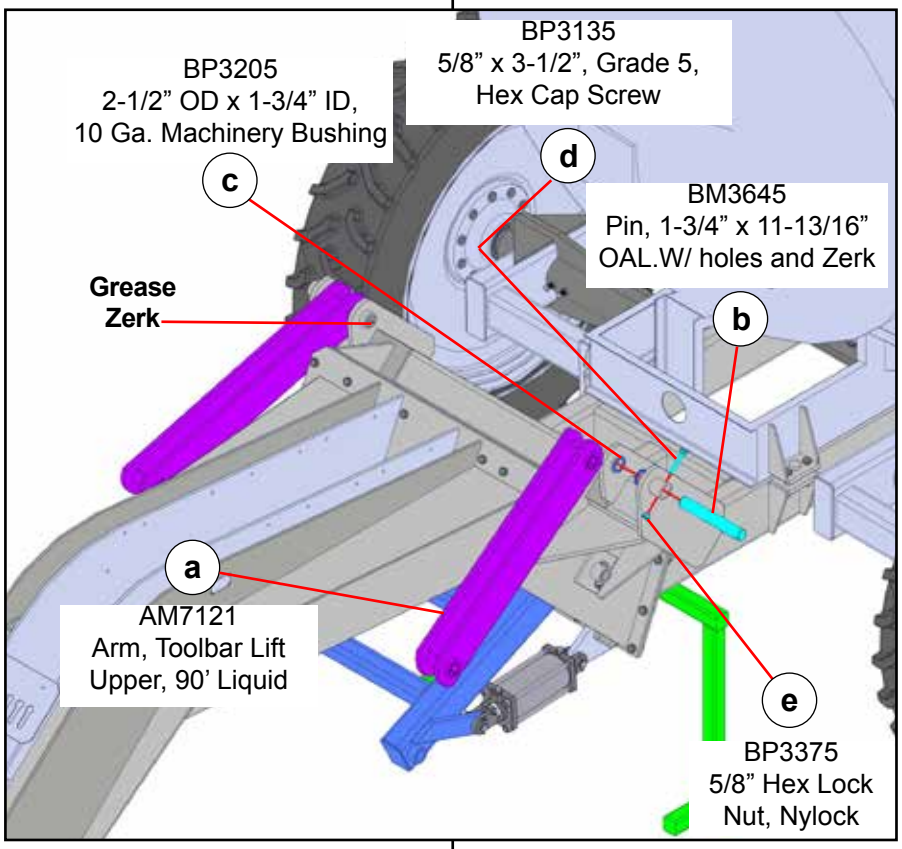

1. **Raise (a) (AM7121) upper lift arm into position with forklift. Secure to frame connector with (b) (BP3645) 1-3/4” x 11-13/16” pins, grease zerk to the inside. Place (c) (BP3205) 2-1/2” ID x 1-3/4” OD 10 GA. machinery bushing on each side of the lift arm mount as pin is inserted.**

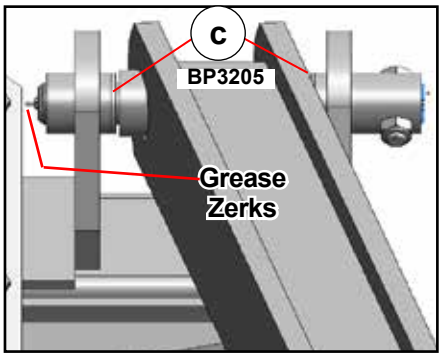

2. **Secure pins with (d) (BP3135) 5/8” x 3-1/2” hex cap screws and (e) (BP3375) 5/8” hex lock nuts, Nylock.**

3. **Flip upper lift arms back.**

Assembly (Center Section Mounting) Wheel or Track Main Frame

AT7000	Task	Procedures	Illustrations
►	**Center section mounting**		

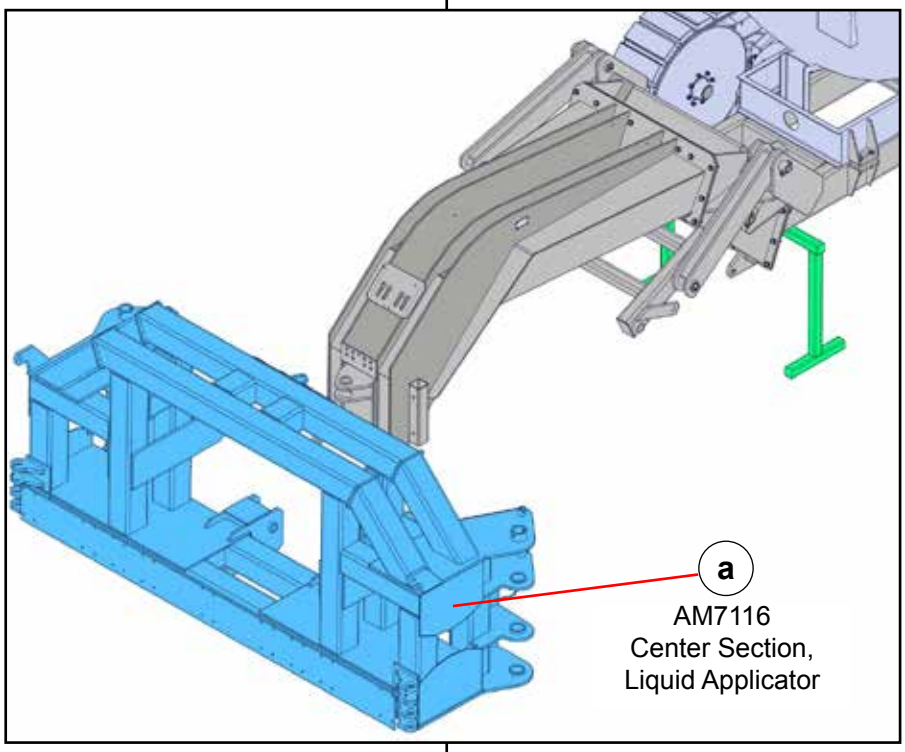

1. **Position (a) (AM7116) center section, on the loader teeth. Place clamps behind center section to keep it from sliding down the teeth.**
2. **Slowly maneuver the center section over the tongue.**

Assembly (Center Section Mounting) Wheel or Track Main Frame

Task	Procedures	Illustrations

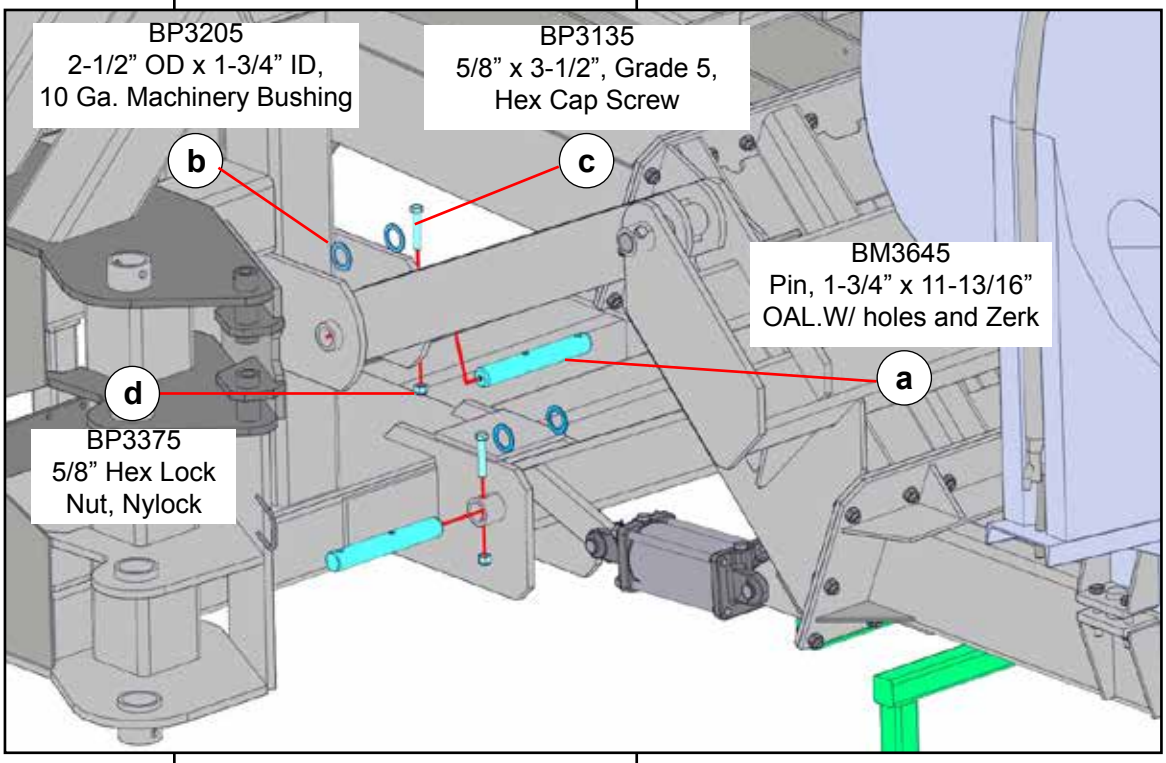

1. **Connect lower lift arm to center section with (a) (BP3645) 1-3/4" x 11-13/16" pins, grease zerk to the inside. Place (b) (BP3205) 2-1/2" ID x 1-3/4" OD 10 GA. machinery bushing on each side of the lift arm mount as pin is inserted.**

2. **Secure pins with (c) (BP3135) 5/8" x 3-1/2" hex cap screws and (d) (BP3375) 5/8" hex lock nuts, Nylock.**

3. **Flip upper lift arm over.**

4. **Connect upper lift arm to center section with (a) (BP3645) 1-3/4" x 11-13/16" pins, grease zerk to the outside. Place (b) (BP3205) 2-1/2" ID x 1-3/4" OD 10 GA. machinery bushing on each side of the lift arm mount as pin is inserted.**

5. **Secure pins with (c) (BP3135) 5/8" x 3-1/2" hex cap screws and (d) (BP3375) 5/8" hex lock nuts, Nylock.**

Assembly (Park Stands and Depth Collar Installation) Wheel or Track Main Frame

AT7000	Task	Procedures	Illustrations

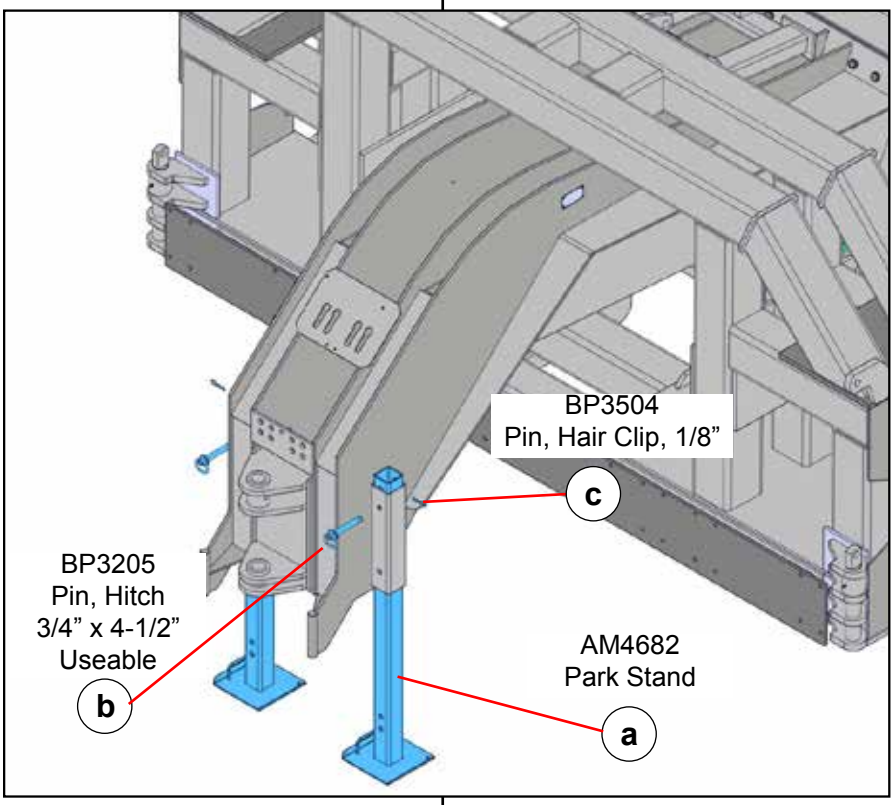

1. **Raise center section and tongue assembly and insert (a) (AM4682) park stands.**
2. **Install (d) (BP3433) 4-1/4” depth collar on 4 x 8 lift cylinders.**
3. **Place support stand under center section assembly and lower.**
4. **Adjust park stands and insert (b) (BP3205) 3/4” x 4-1/2” hitch pins. Secure with (c) (BP3504) 1/8” hair pin clips.**

BP3433
4-1/4” Depth
Collar
d

Assembly (Transport Rest Mounting)
Wheel or Track Main Frame

AT7000	Task	Procedures	Illustrations

Toolbar transport rest mounting

WARNING

Keep bystanders away during assembly

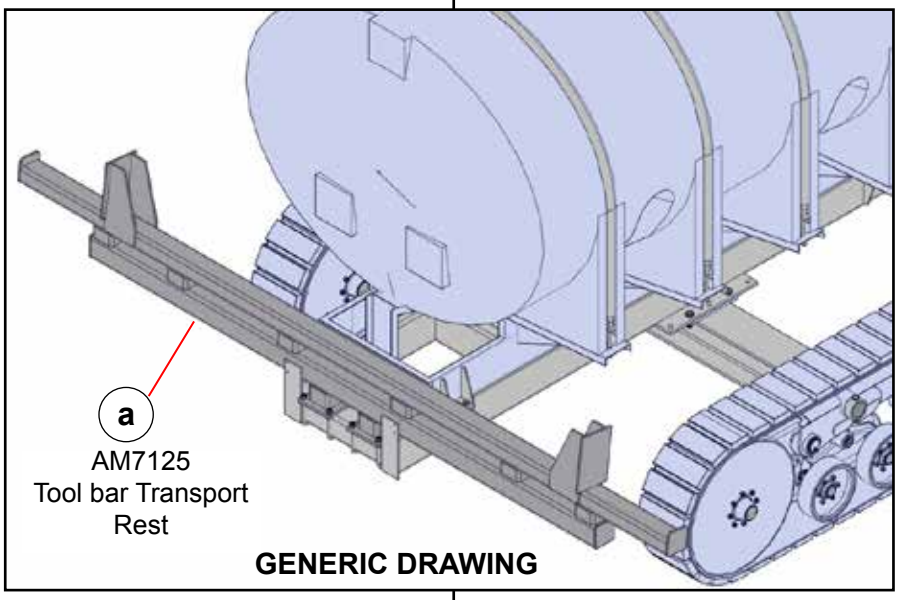

GENERIC DRAWING

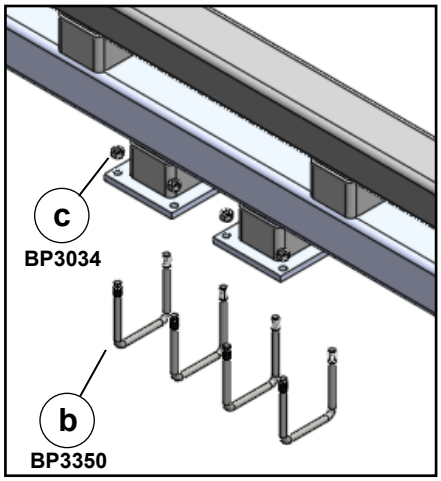

1. **Place (a) (AM7125) toolbar transport rest on rear frame weldment and secure with (b) (BP3350) 3/4" 6" x 7-7/16" u-bolts and (c) (BP3034) 3/4" hex nuts.**

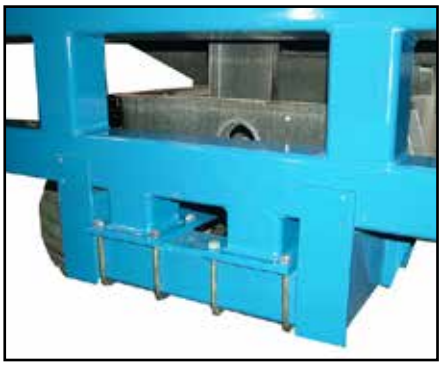

Assembly (Primary Wing Mounting)

AT7000	Task	Procedures	Illustrations

▶ Primary wing mounting

▶ **NOTE:** Right-hand and left-hand as viewed from the rear

WARNING Keep bystanders away during assembly

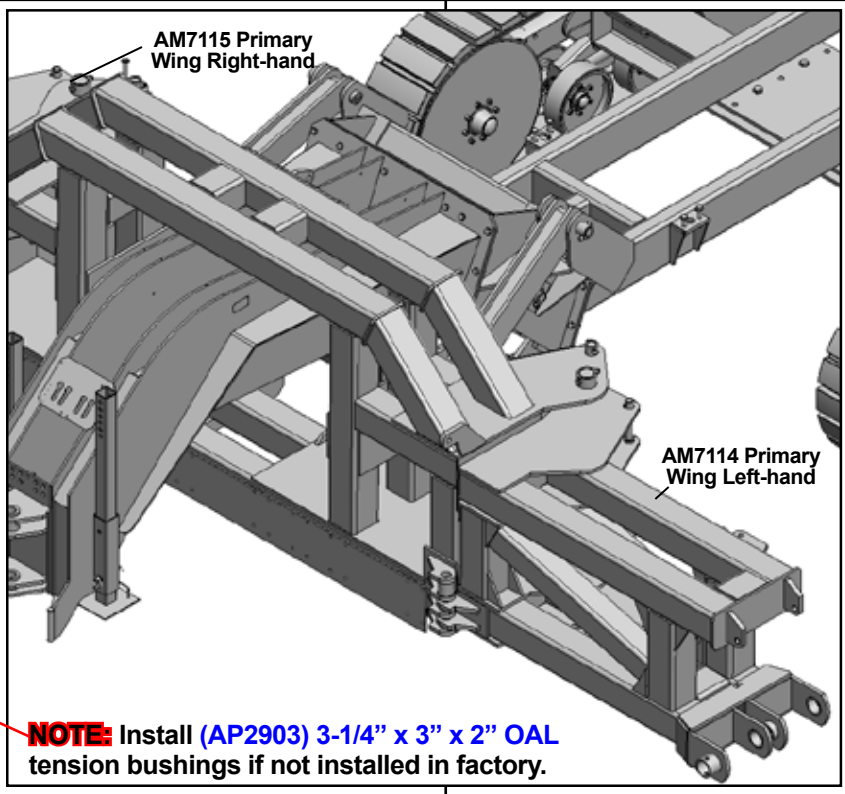

NOTE: Install (AP2903) 3-1/4" x 3" x 2" OAL tension bushings if not installed in factory.

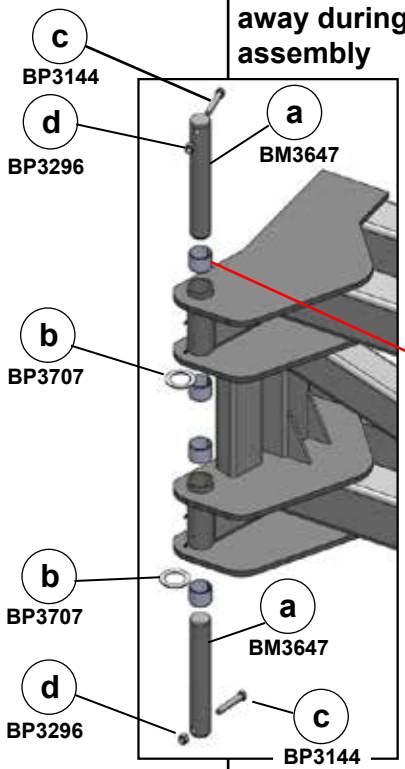

1. Position primary wing into center section hinge weldments. Insert punch through top hole (a) (BM3647) 3" x 15-3/4" pin to assist in pin insertions. Insert (b) (BP3707) 4-1/4" OD x 3" ID, 10 GA machinery bushing as pin is insert. Align pin hole and hinge weldment hole as pin is inserted. Secure with (c) (BP3144) 3/4" x 5", grade 5, hex cap screw and (d) (BP3296) 3/4" hex lock nut.

2. Insert bottom (a) (BM3647) 3" x 15-3/4" pin from the bottom. Insert punch through hole (a) (BM3647) 3" x 15-3/4" pin to assist in pin insertions. A floor jack can be use to insert the pin. Insert (b) (BP3707) 4-1/4" OD x 3" ID, 10 GA machinery bushing as pin is inserted. Align pin hole and hinge weldment hole as pin is inserted. Secure with (c) (BP3144) 3/4" x 5", grade 5, hex cap screw and (d) (BP3296) 3/4" hex lock nut.

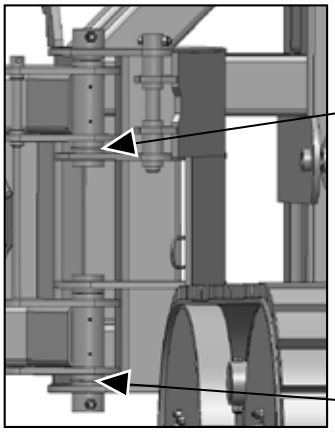

3. Repeat steps for opposite wing.

Assembly (Secondary Wing Mounting)

AT7000	Task	Procedures	Illustrations

▶ **Secondary wing mounting**

▶ **NOTE:** Right-hand and left-hand as viewed from the rear

WARNING Keep bystanders away during assembly

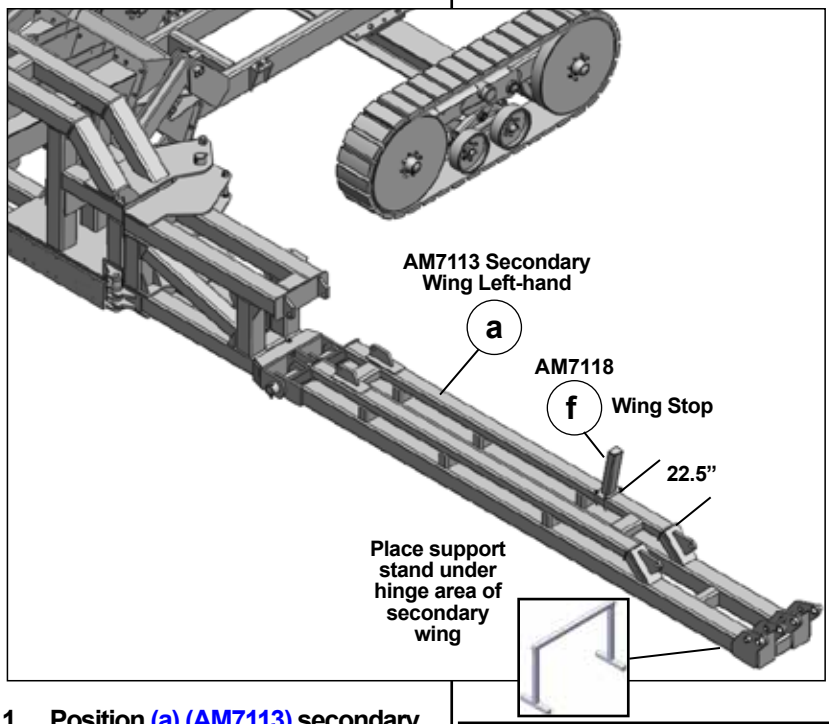

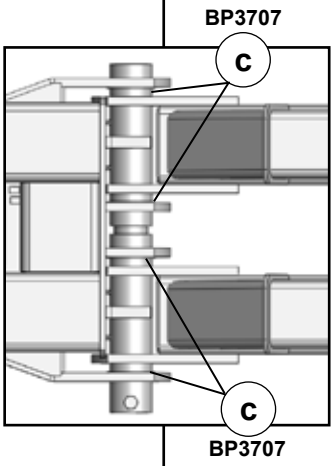

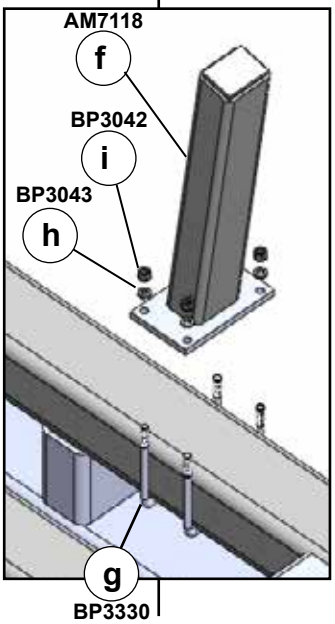

1. Position (a) (AM7113) secondary wing in primary wing hinge weldment. Insert (b) (BM3648) 3” x 30-3/4” pin, installing four (c) (BP3707) 4-1/4” OD x 3” ID 10 GA. machinery bushings as pin is inserted.
2. Secure pin with (d) (BP3144) 3/4” x 5”, grade 5, hex cap screw and (e) (BP3296) 3/4” hex lock nut.
3. Repeat steps for opposite wing.
4. Mount (f) (AM7118) wing stops 17” tube length to secondary wing 22.5” from cylinder lug plate to edge of wing stop plate.
5. Secure with (g) (BP3330) 1/2” x 6” x 5-1/8” u-bolts, (h) (BP3043) 1/2” lock washers and (i) (BP3042) 1/2” hex nuts.
6. Place support stands near hinge area of secondary wings on both sides before the third wing is mounted.

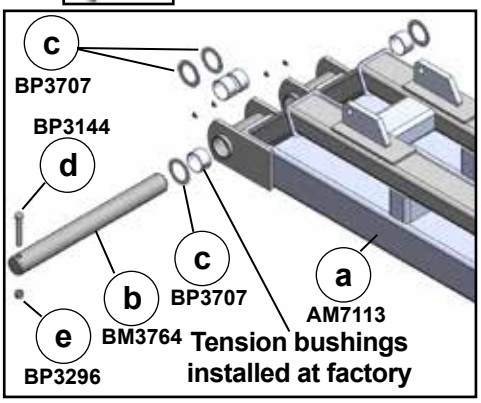

Assembly (Rear Fold Stop and Third Wing Mounting)

AT7000	Task	Procedures	Illustrations

▶ **Rear fold wing stop**

1. Install rear fold wing stop on tank side of primary wings.

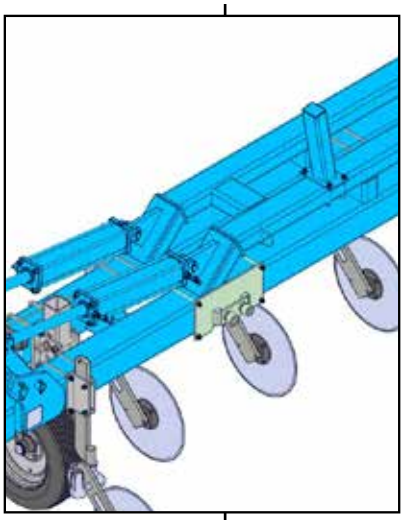

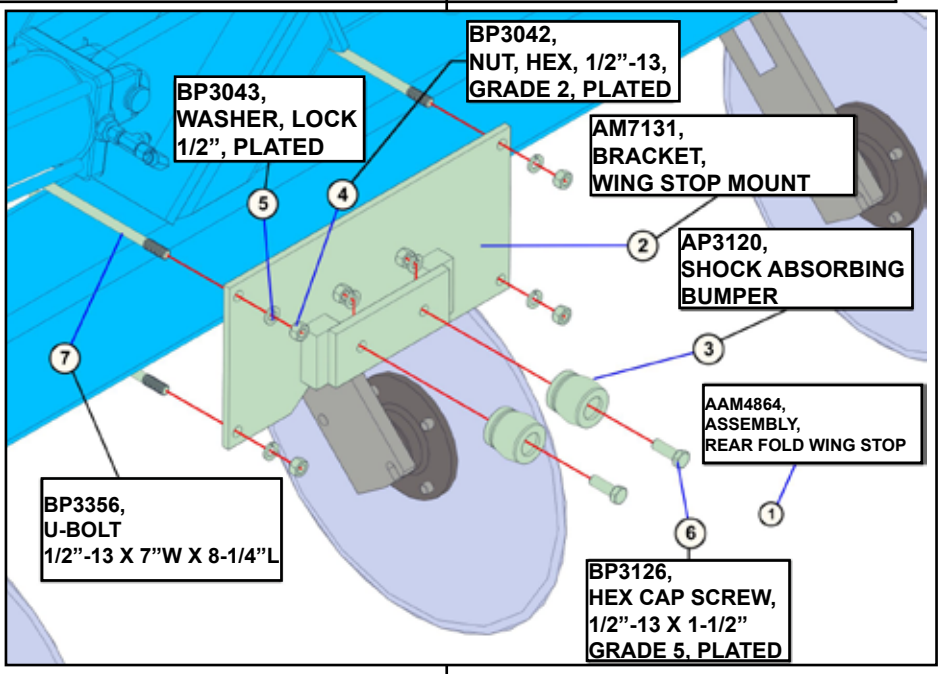

▶ **Third wing mounting**

▶ **NOTE:** Right-hand and left-hand as viewed from the rear

WARNING Keep bystanders away during assembly

NOTE: AM7111 & 12 for 90’ bar. AM7135 & 36 for 80’ bar

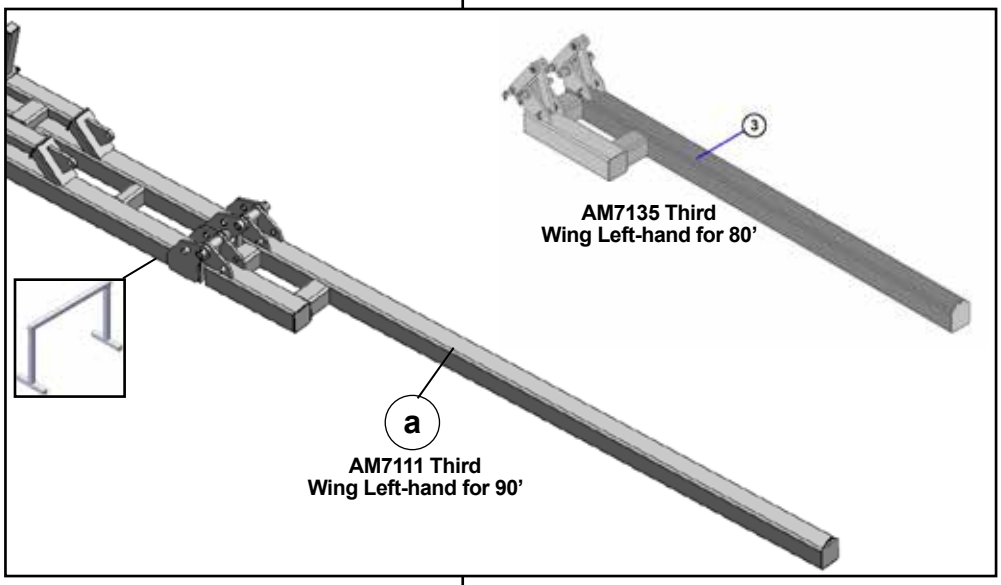

2. Support stands must be placed under the secondary wing before the third wing is mounted.

3. Position third wing (a) (AM7111) third wing left-hand 16’10” in secondary hinge mounts. Insert (b) (BM3485) 1-3/4” x 11-13/16” pins and secure with (c) (BP3115) 3/8” hex cap screws and (d) (CP2660) 3/8” hex lock nut, Nylock.

4. Repeat steps for (AM7112) third wing right-hand.

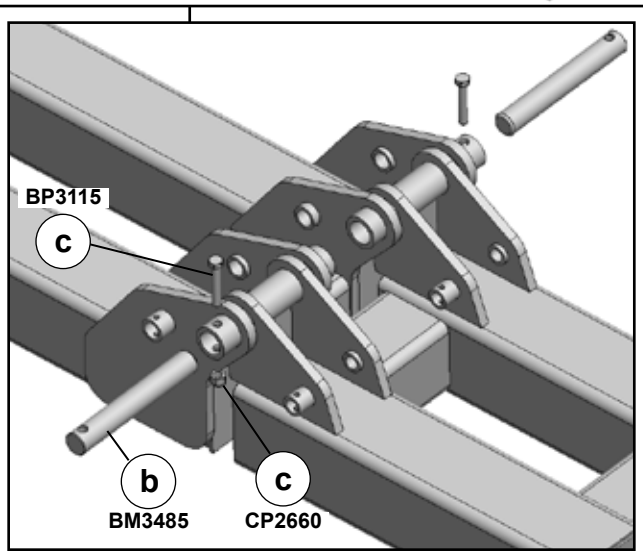

Assembly (Two Point Pivot Hitch Mounting)

AT7000	Task	Procedures	Illustrations

Two point pivot hitch mounting

WARNING

Keep bystanders away during assembly

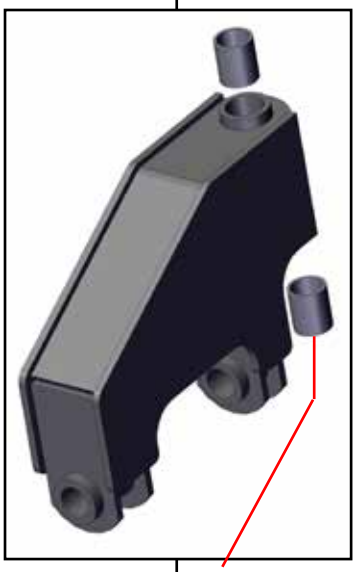

NOTE: Install (AP3136) 2" x 2-3/4" self-lubricated bushings if not installed in factory.

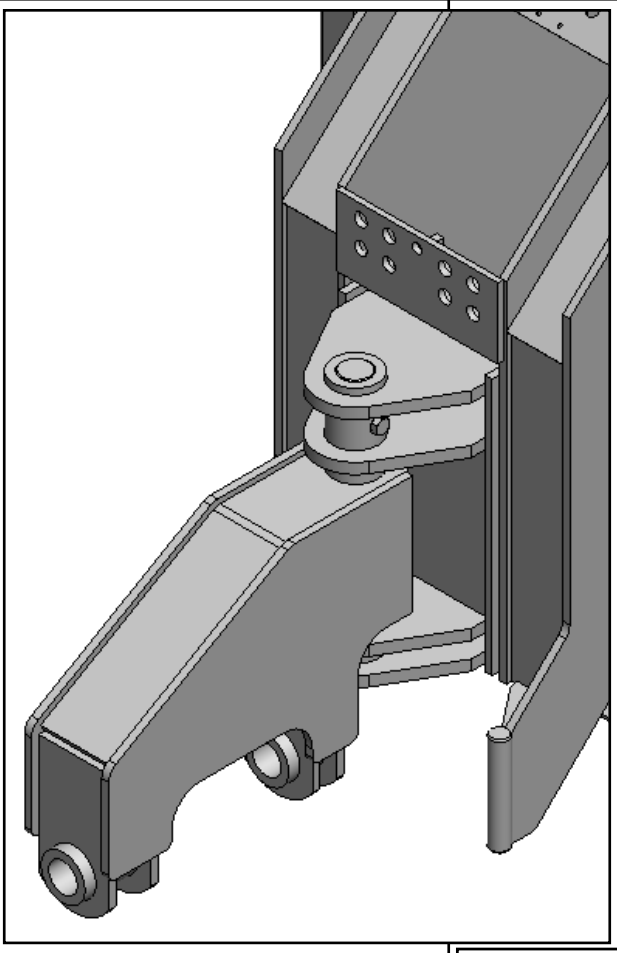

1. Place (a) (AM3086) 2-point pivot hitch on tongue weldment. Insert (b) (BM3483) 2" x 18-1/2" pin. Place (c) (BP3599) 3" OD x 2" ID, 10 Ga. between top of pivot and tongue weldment.

2. Align pin hole with tongue weldment hole and secure with (d) (BP3136) 5/8" x 4" hex cap screw and (e) (BP3375) 5/8" hex lock nut, Nylock.

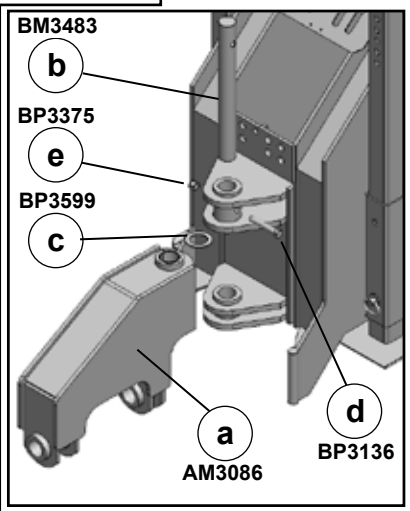

Assembly (Two Point CAT IV Hitch Mounting)

AT7000	Task	Procedures	Illustrations

Two point CAT IV hitch mounting

WARNING

Keep bystanders away during assembly

NOTE: Install (AP3136) 2" x 2-3/4" self-lubricated bushings if not installed in factory.

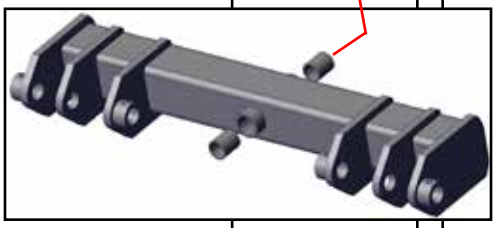

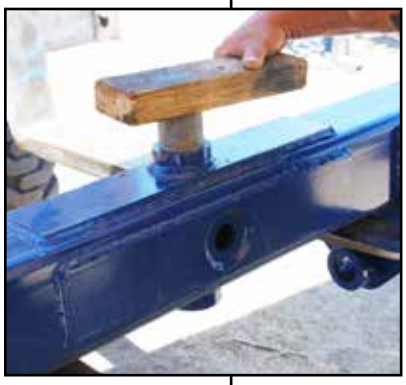

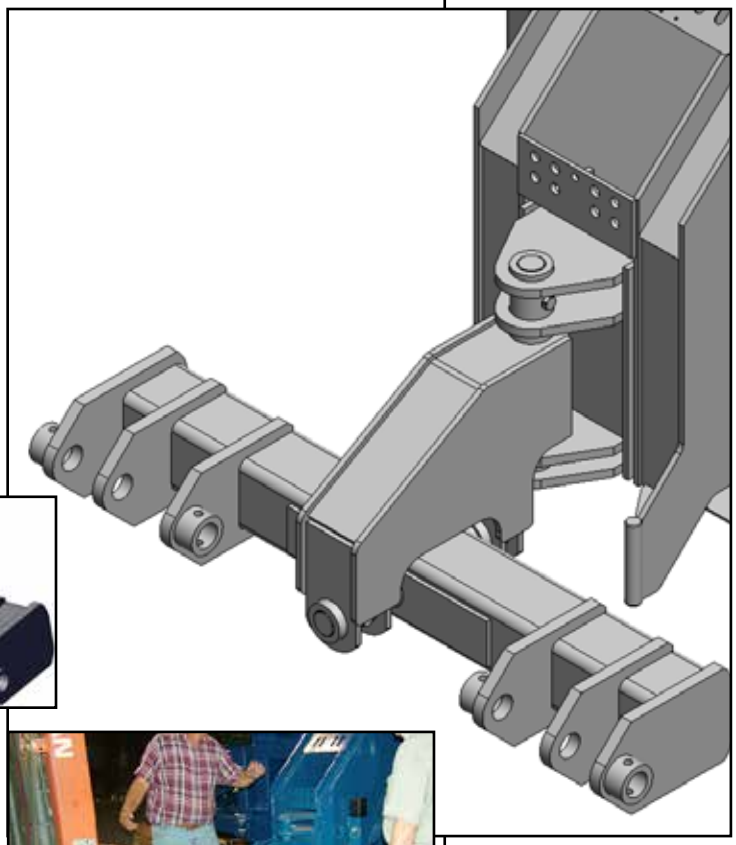

1. Raise (a) (AM7124) two point CAT IV hitch into pivot hitch. Insert (b) (BM3483) 2" x 18-1/2" pin. Place (c) (BP3599) 3" OD x 2" ID, 10 GA machinery bushing tractor side between pivot mount and hitch

2. Align pin hole with pivot weldment hole and secure with (d) (BP3136) 5/8" x 4" hex cap screw and (e) (BP3375) 5/8" hex lock nut, Nylock.

3. Install (f) (BM3631) CAT IV lower link pins and secure with (d) (BP3136) 5/8" x 4" hex cap screw and (e) (BP3375) 5/8" hex lock nut, Nylock.

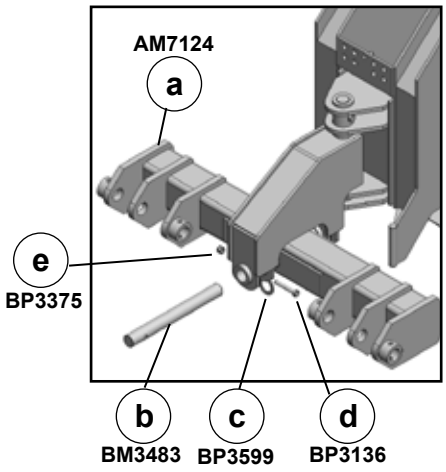

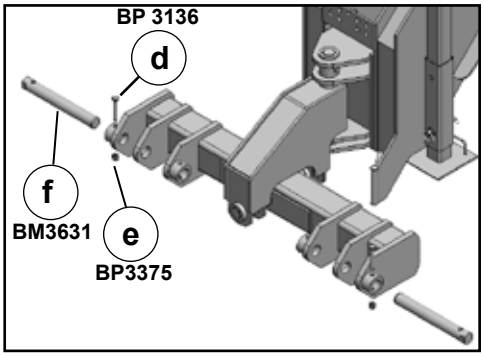

Assembly Primary Wing Cylinder Mounting

AT7000	Task	Procedures	Illustrations
►	**Primary wing cylinder mounting**		
►	**NOTE:** Right-hand and left-hand as viewed from the rear		

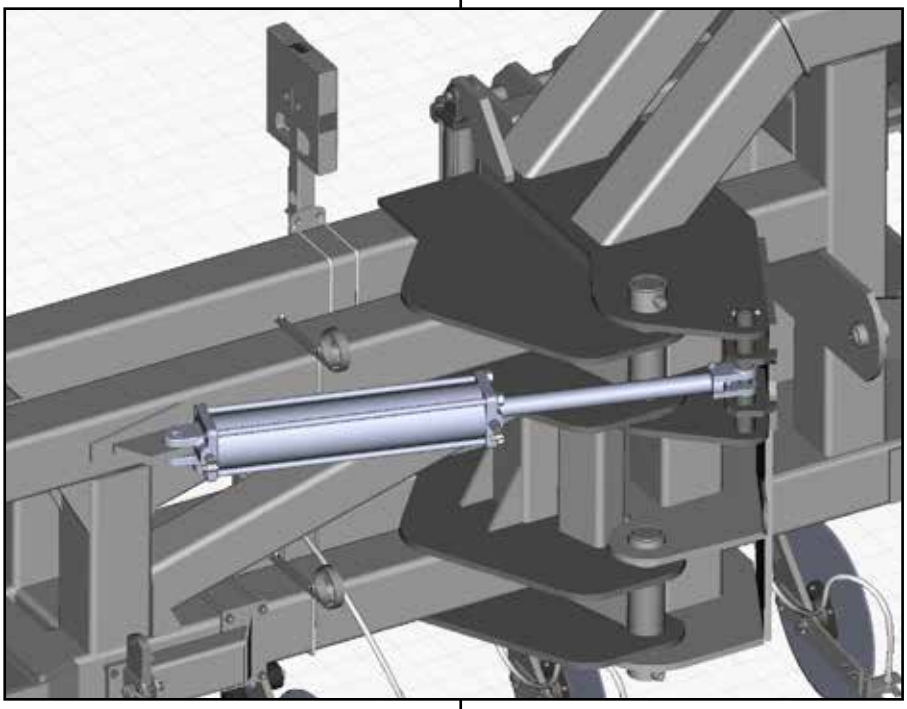

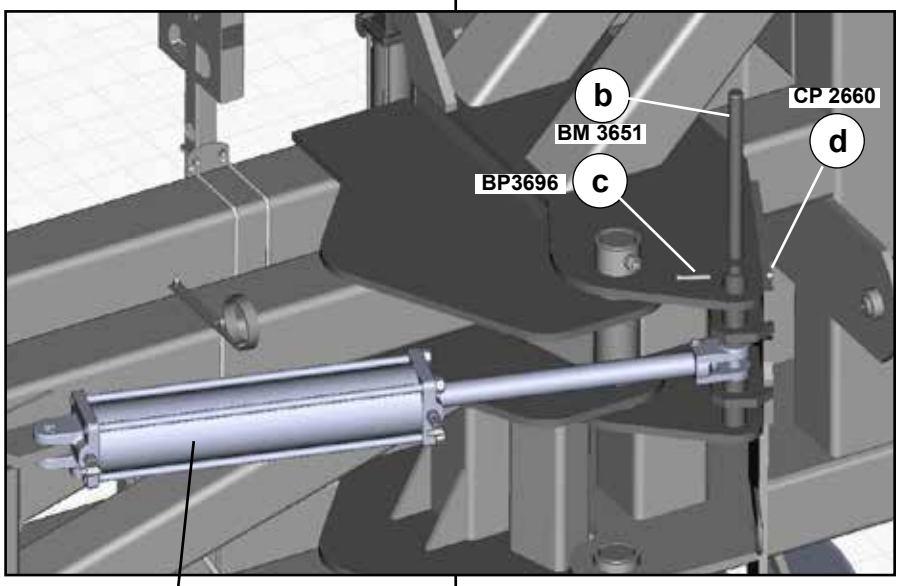

a

DP4554
5 x 24

1. Install (a) (DP4554) 5' x 24" hydraulic cylinder to primary wing lug. Extend cylinder rod to main frame hinge weldment Insert (b) (BM3651)1-1/4" x 14-7/8" pin. Secure pin with (c) (BP3096) 3/8" x 2-1/2" hex cap screw, grade 5 and (d) (CP2660) 3/8" nylock hex lock nut.

Assembly (Secondary Wing Lift Cylinders)

AT7000	Task	Procedures	Illustrations
►	Secondary wing lift cylinders		
►	**NOTE:** Right-hand and left-hand as viewed from the rear		

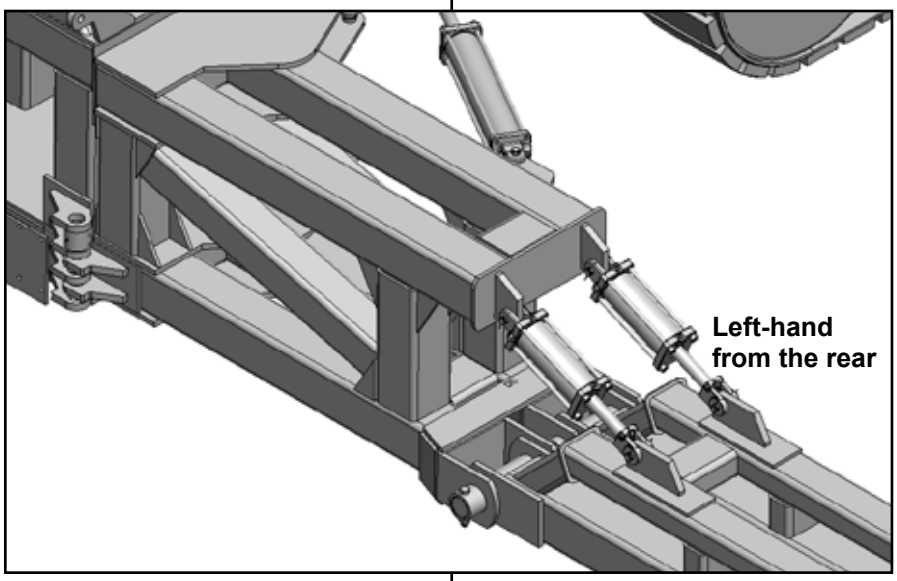

1. Attach (a) (DP4552) 4” x 8” hydraulic cylinders butt end to primary wing cylinder weldments with cylinder pins.
   Extend rod ends to secondary wing cylinder weldments and attach with cylinder pins.

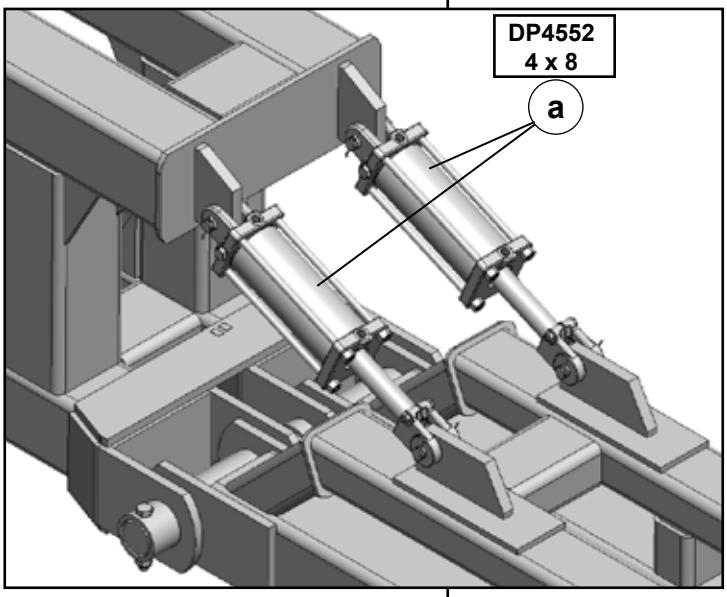

Assembly (Secondary Wing Linkage)

AT7000	Task	Procedures	Illustrations
►	Secondary wing linkage mounting		
►	**NOTE:** Right-hand and left-hand as viewed from the rear		

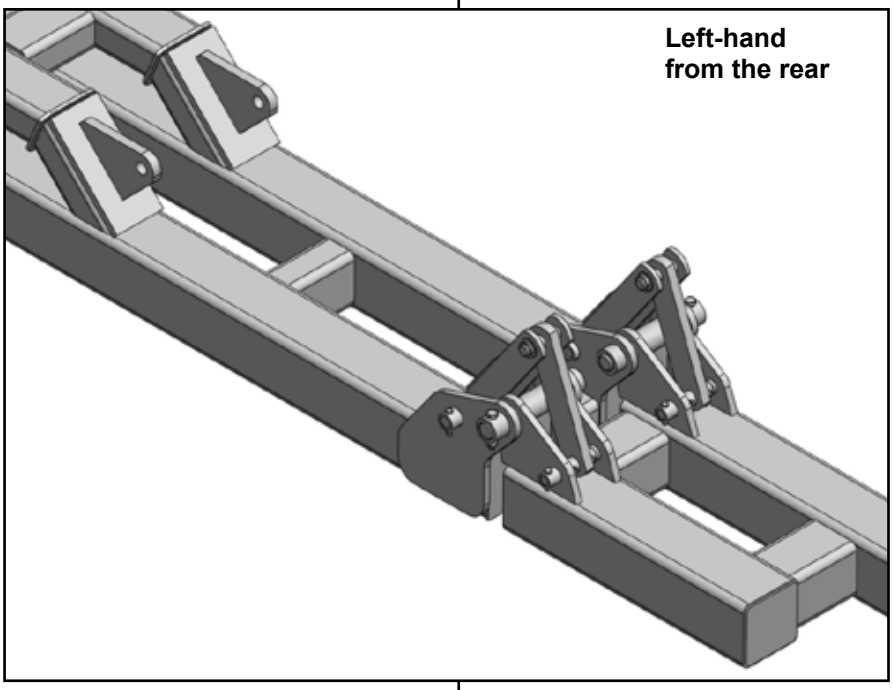

1. Install (a) (AM6189) secondary wing linkages on each side with (b) (BM3486)1-1/4" x 10-7/16"pins. Insert (c) (BP3249) 1-7/8" OD x 1-1/4"ID 14 Ga. machinery bushings as pin is inserted. Secure pins with (d) (BP3096) 3/8" x 2-1/2", grade 5, hex cap screws and (e) (CP2660) 3/8" hex lock nuts, Nylock.

2. Attach (f) (AM6189) secondary wing linkages on each side with (g) (BM3487) 1" x 7-3/4" OAL pins. Insert (h) (BP3215) 1-1/2" OD x 1" ID, 14 Ga. machinery bushings as pin is inserted. Secure pins with (i) (BP3115) 3/8" x 2" grade 5, hex cap screws and (e) (CP2660) 3/8" hex lock nuts, Nylock.

3. Mount (m) (DP4579) 4-1/2" x 20" hydraulic cylinders to secondary wing cylinder weldments extend rod to linkage.

4. Place (l) (AP2711) 1-1/4" heavy duty external snap rings on (j) (BM3548) 1-1/4" x 4-3/4" double grooved pins. Slide (k) (BP3249) 1-7/8" OD x 1-1/4" ID 14 GA machinery bushings over pins.

5. Insert (j) (BM3548) 1-1/4" x 4-3/4" double grooved pin assembly through linkages and cylinders. Secure with (k) (BP3249) 1-7/8" OD x 1-1/4" ID 14 Ga. machinery bushings and (l) (AP2711) 1-1/4" heavy duty external snap rings.

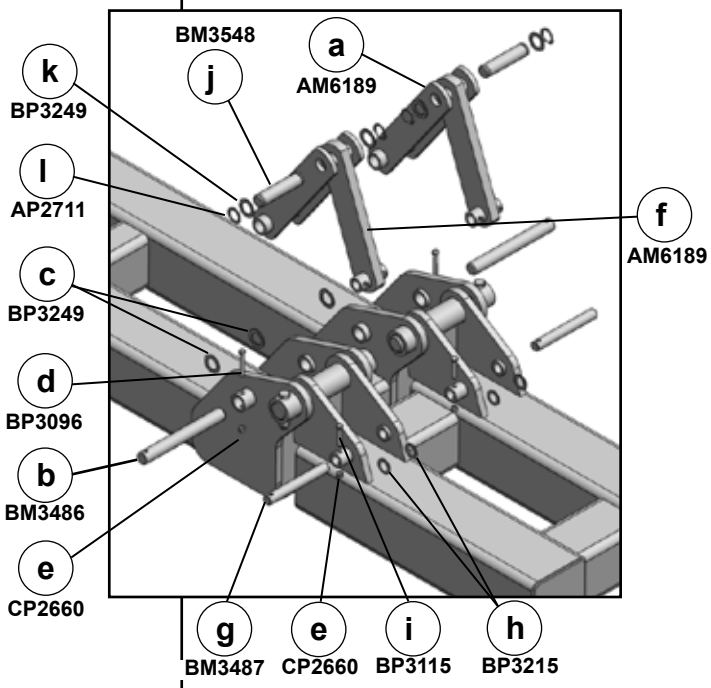

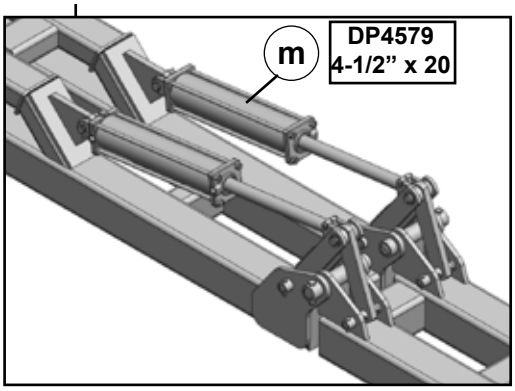

Assembly (Transport Lock)

AT7000	Task	Procedures	Illustrations
►	**Transport lock mounting**		

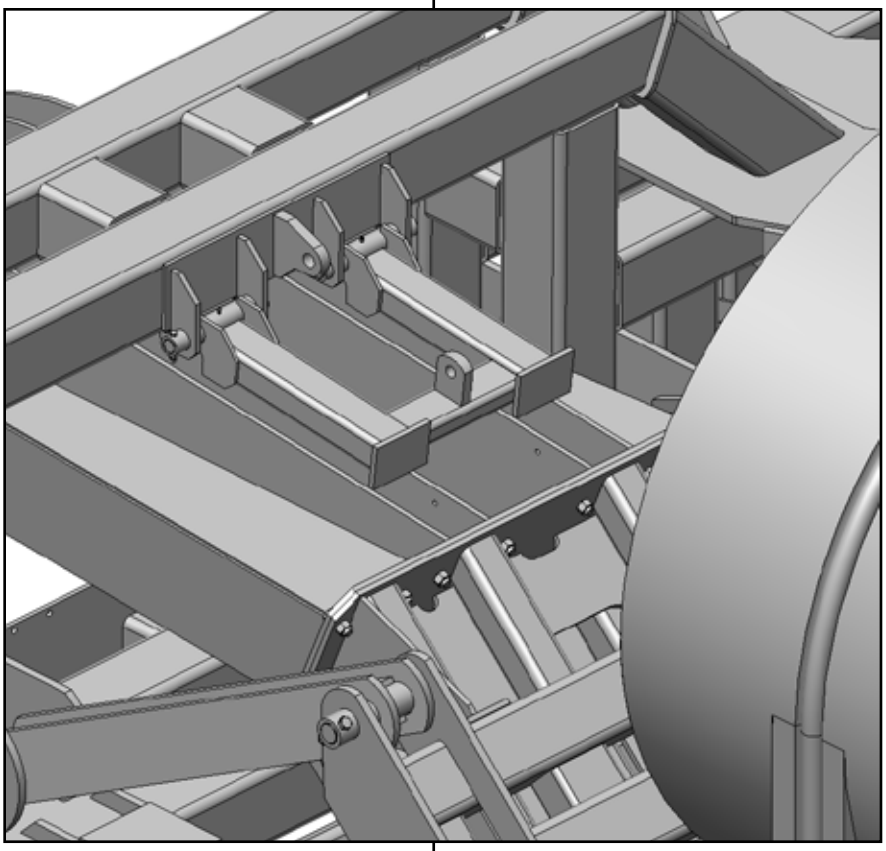

1. **Install (a) (AM7117) transport lock leg into center section weldments with (b) (BP3486) 1-1/4" x 10-7/16" OAL. Secure pins with (c) (BP3096) 3/8" x 2-1/2" hex cap screws, grade 5, and (d) (CP2660) 3/8" hex lock nuts, nylock.**

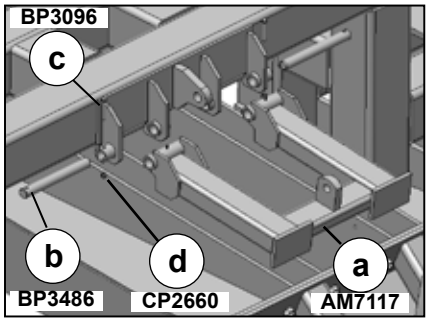

2. **Mount (e) (DP4553) 2" x 6" hydraulic cylinder to center section weldment with cylinder pin. Extend rod end to transport lock weldment and secure with cylinder pin.**

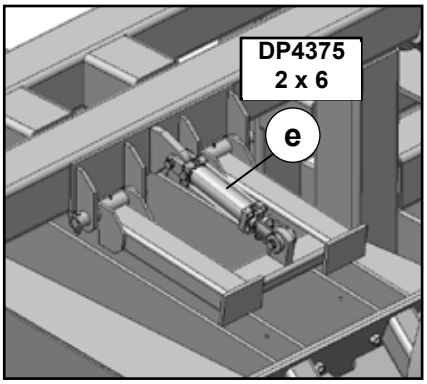

Assembly (Wing Latch)

AT7000	Task	Procedures	Illustrations

Wing latch pin mounting

NOTE: Right-hand and left-hand as viewed from the rear

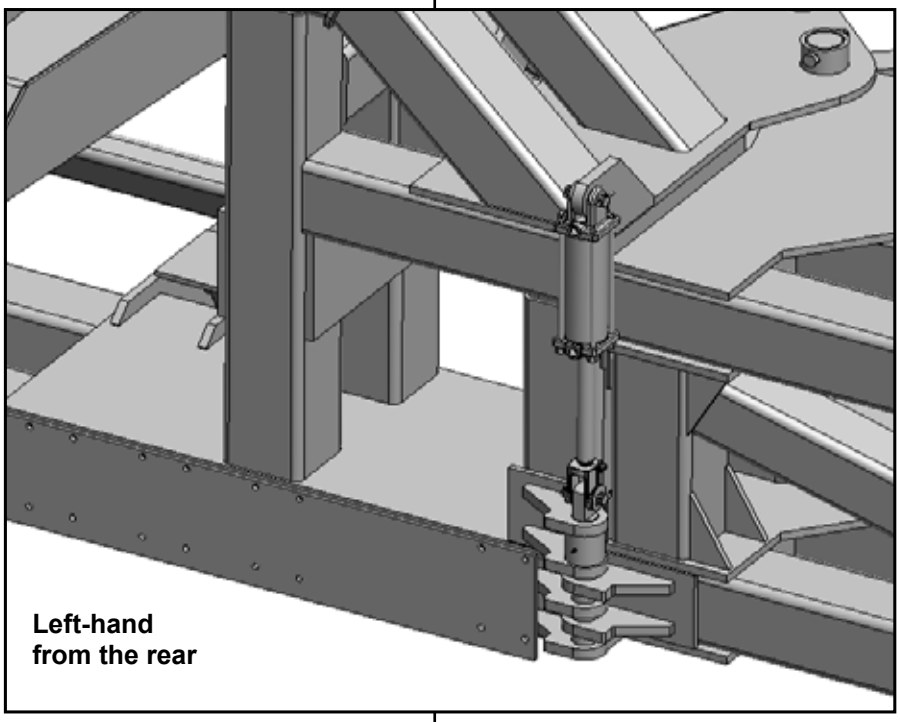

1. Insert (a) (BM3649) 2" x 13" wing latch pins through center section weldment on each side.

Lubrication:
Wing latch pin

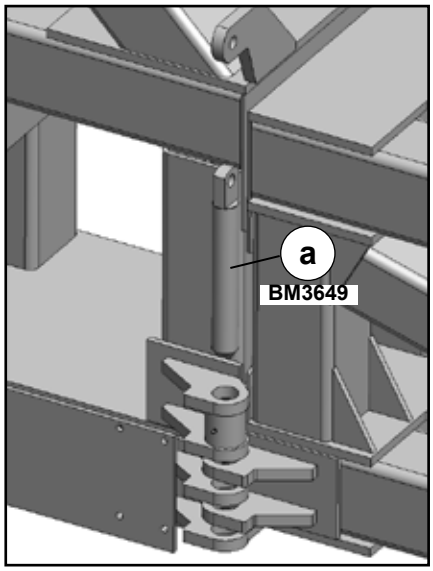

2. Mount butt end of (b) (DP4494) 3 x 8 hydraulic cylinders to center section weldments with cylinder pins.
Extend rod end to wing latch pins and secure with cylinder pins.

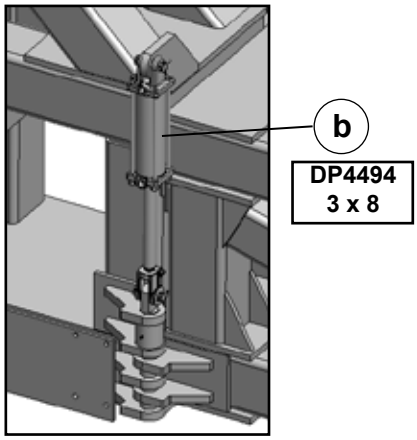

Assembly (Cylinder Fittings Primary Wing Fold)

AT7000	Task	Procedures	Illustrations
►	Primary wing fold cylinder fittings		
►	**NOTE:** Right-hand and left-hand as viewed from the rear		

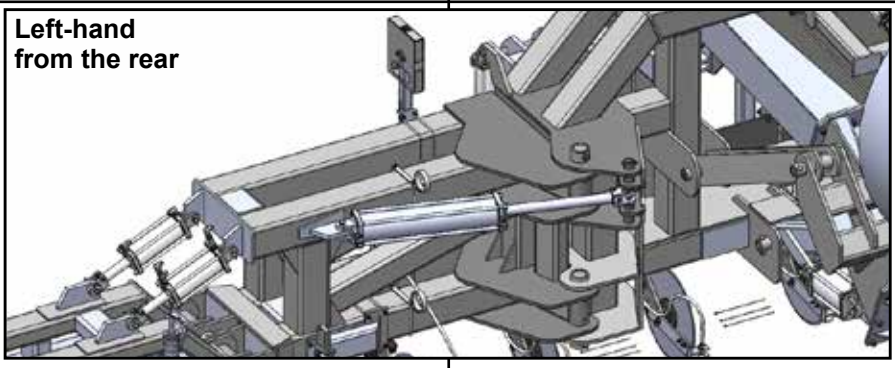

1. Install (a) (DP4399) 10MSAE-8FSAE reducer in both cylinder ports.
2. Install (b) (DP4551) 6MJ-8MSAE, adapter, w/restrict, in rod end port of (c) (DP4554) 5 x 24 cylinder.
3. Install (d) (DP4445) 6MIC-6FJX 90 degree elbow on adapter.
4. Install (e) (DP4310) 90 degree 6MJ-8MSAE adapter in (a) rod end.

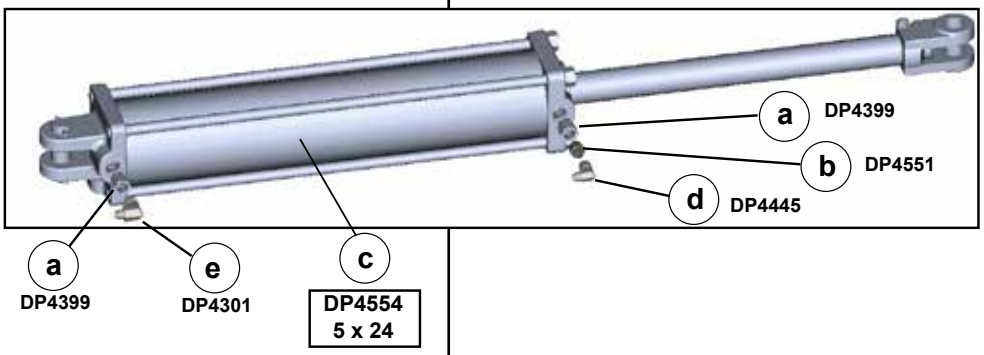

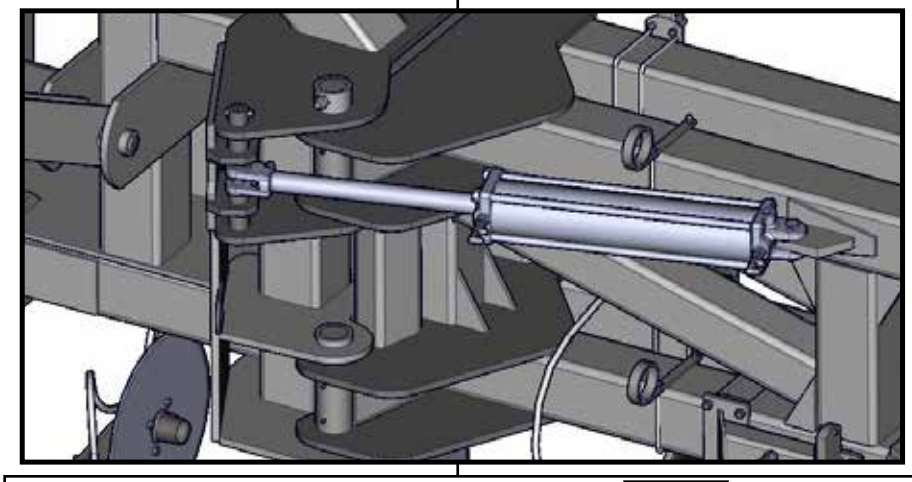

1. Install (a) (DP4399) 10MSAE-8FSAE reducer in both cylinder ports.

   Install (b) (DP4551) 6MJ-8MSAE, adapter, w/restrict, in rod end (a) .
4. Install (f) (DP4394) 8MSAE-6MJIC adapter in butt end port (a).
5. Place (g) (DP4379) 6FJX-6MJ-6MJ, tee run on both adapters.
6. Secure (d) (DP4445) 6MIC-6FJX 90 degree elbow on tees.

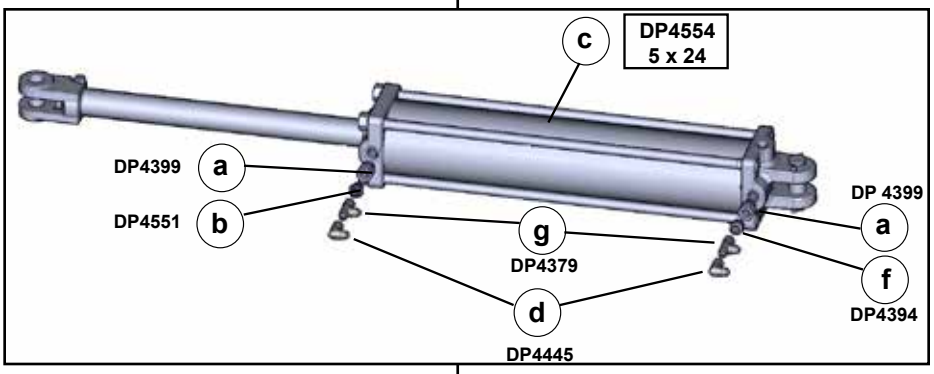

Assembly (Cylinder Fittings Wing Lock, Transport Lock)

AT7000	Task	Procedures	Illustrations
►	**Wing lock and Transport lock cylinder fittings**		

1. **Install (a) (DP4301) 6MJ-8MSAE 90 degree adapters, in each (b) cylinder butt and rod ports.**

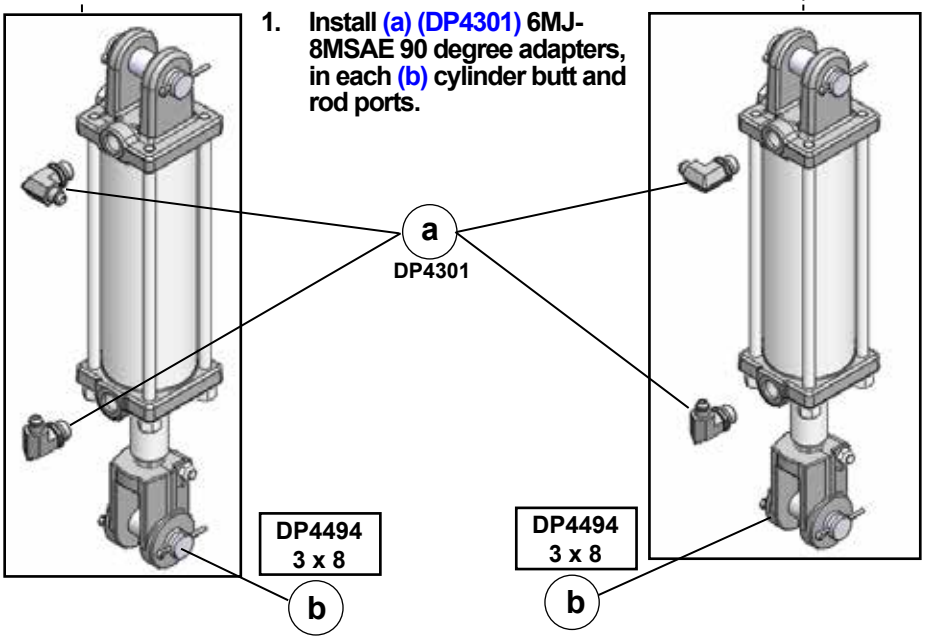

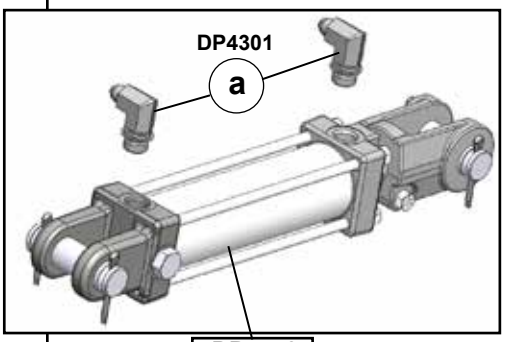

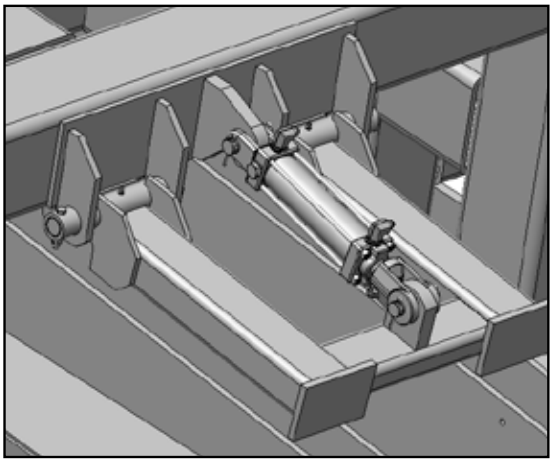

2. **Install (a) (DP4301) 6MJ-8MSAE 90 degree adapters, in each (c) cylinder butt and rod ports.**

Assembly (Lift Cylinder Fittings)

AT7000	Task	Procedures	Illustrations
►	**Lift cylinder fittings**		

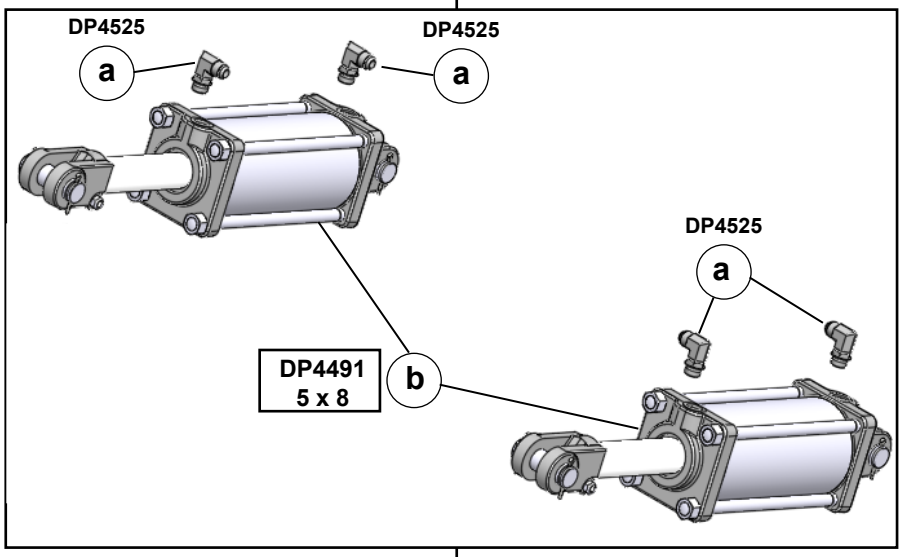

1. **Install (a) (DP4525) 10MSAE -10 MJIC 90 degree adapters, in each (b) (DP4491) 5 x 8 cylinder butt and rod ports.**

Assembly (Secondary Wing Cylinder Fittings)

AT7000	Task	Procedures	Illustrations
►	Secondary cylinder fittings		
►	**NOTE:** Right-hand and left-hand as viewed from the rear		

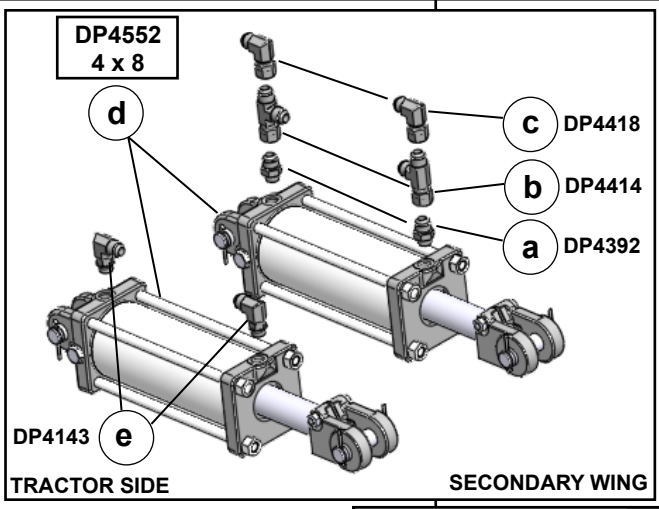

1. Install (e) (DP4143) 10MJIC-8MSAE 90 degree adapters, in the tractor side (d) (DP4552) 4 x 8 cylinder butt and rod ports.
2. Install (a) (DP4392) 8MSAE-10MIJ, straight adapters in the tank side (d) (DP4552) 4 x 8 cylinder butt and rod ports.
3. Install (b) (DP4414) 10MJIC-10FJX-10MJIC tees on both (a) adapters with the 10FJX port facing to the center.
4. Install (c) (DP4418) 10MJIC-10FJX 90 degree elbows on (b) tees. Point ports to the center of the tool bar.

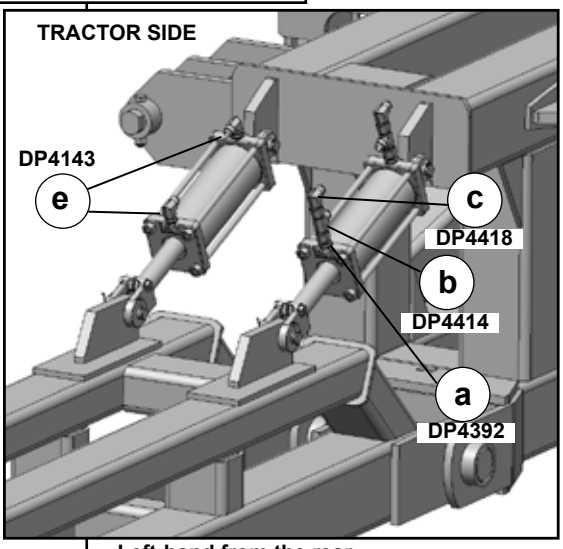

Left-hand from the rear

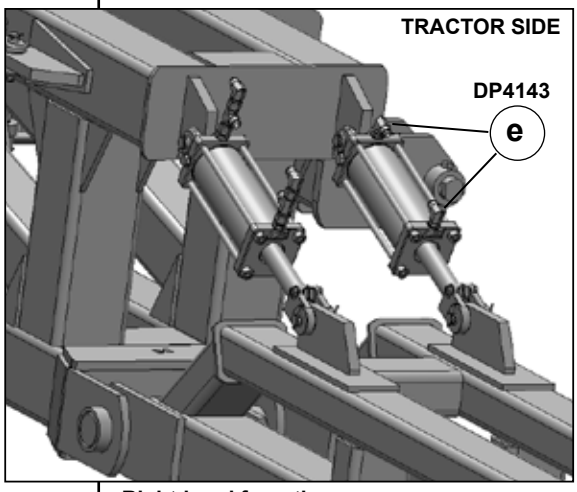

Right-hand from the rear

Assembly (Third Wing Cylinder Fittings)

AT7000	Task	Procedures	Illustrations
►	Third wing cylinder fittings		
►	**NOTE:** Right-hand and left-hand as viewed from the rear		

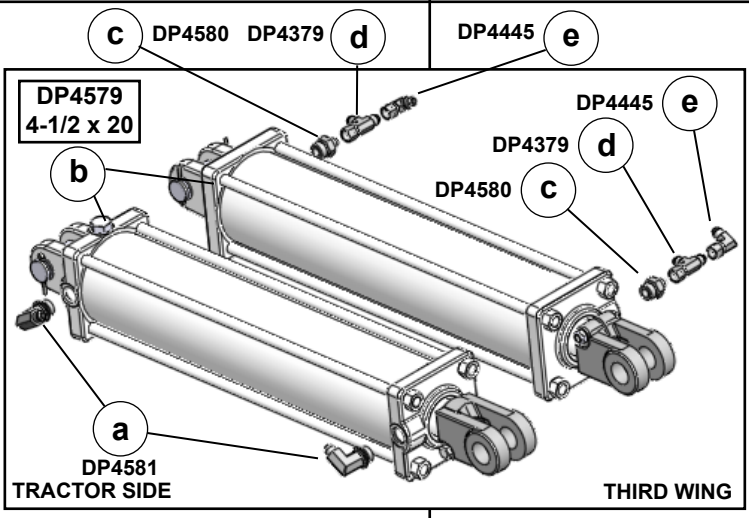

1. Install (c) (DP4580) 6MJ-10MSAE, adapters in the butt and rod ports, tank side of (b) (DP4579) 4-1/2 x 20 hydraulic cylinders.
2. Install (d) (DP4379) 6FJX-6MJ-6MJ tees on each (c) adapters with center outlets pointing to the center of the toolbar.
3. Install (e) (DP4445) 6MJIC-6FJX 90 degree elbows on each (d) tee, outlets facing in.

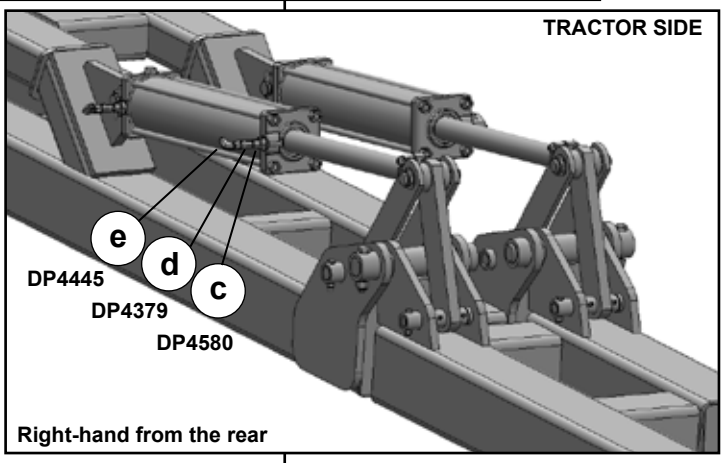

4. Install (a) (DP4581) 6MJ-10MSAE 90 degree adapters in the butt and rod ports, tractor side of (b) (DP4579) 4-1/2 x 20 hydraulic cylinders.
5. Repeat steps on Left-hand side.

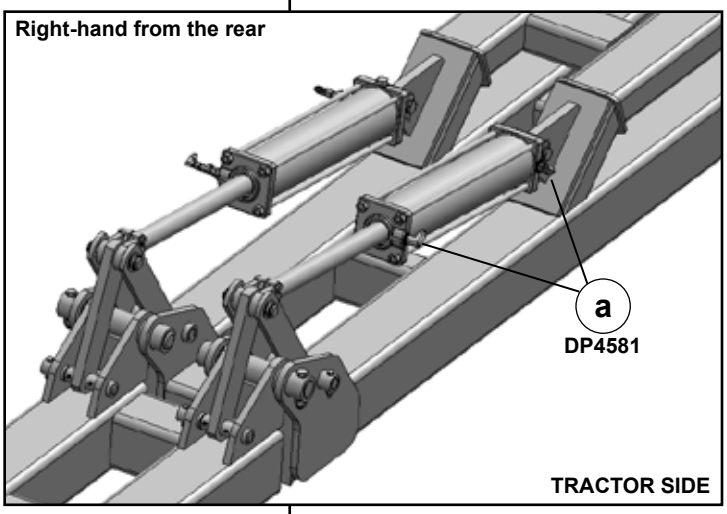

Assembly (Hose Holders and Depth Collar Holders)

AT7000	Task	Procedures	Illustrations

► Hose holders and depth collar storage bracket

► **NOTE:** Right-hand and left-hand as viewed from the rear

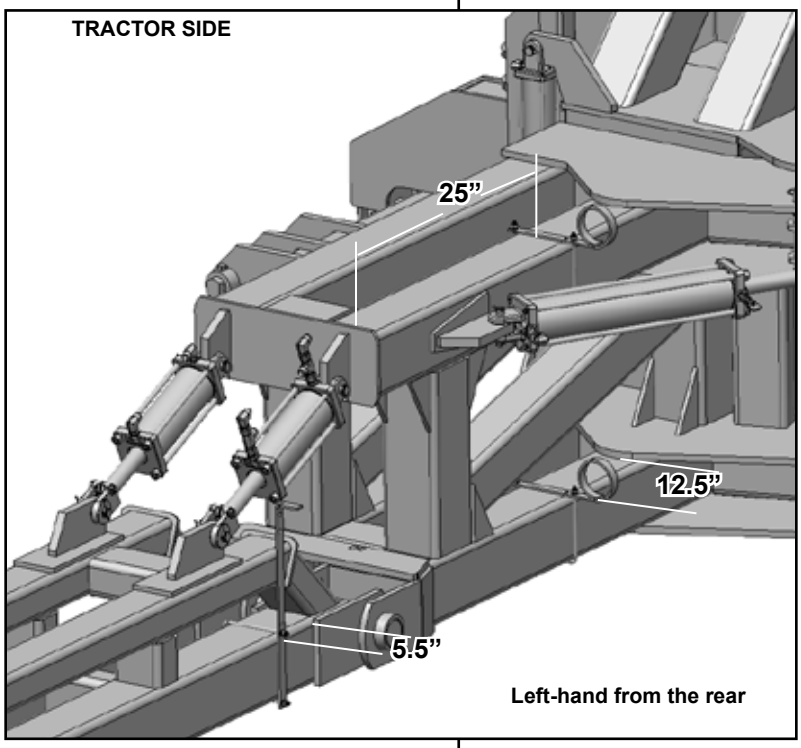

1. Mount (a) (AM4015) closed loop 6” & 7” hose retainer to top tube, 25” from wing end plate to hose holder. Secure with (b) (BP3335) 3/8” x 7”W x 8”L u-bolt, (c) (BP3002) 3/8” lock washers and (d) (BP3001) 3/8” hex nuts.

2. Mount (a) (AM4015) closed loop 6” & 7” hose retainer to top tube, 12.5” from wing hinge plate to hose holder. Secure with (b) (BP3335) 3/8” x 7”W x 8”L u-bolt, (c) (BP3002) 3/8” lock washers and (d) (BP3001) 3/8” hex nuts.

3. Mount (e) (AM4817) depth collar storage bracket to secondary wing tube 5.5” from hinge plate to storage bracket. Secure with (b) (BP3335) 3/8” x 7”W x 8”L u-bolt, (c) (BP3002) 3/8” lock washers and (d) (BP3001) 3/8” hex nuts.

4. Place (f) (BP3433) 1-3/4” depth collar set on bracket. Bracket can be bent to the rear so depth collar will fit.

5. Repeat steps for right-hand side from the rear.

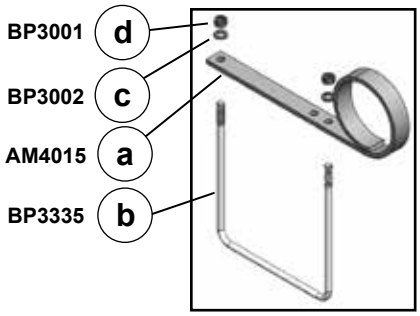

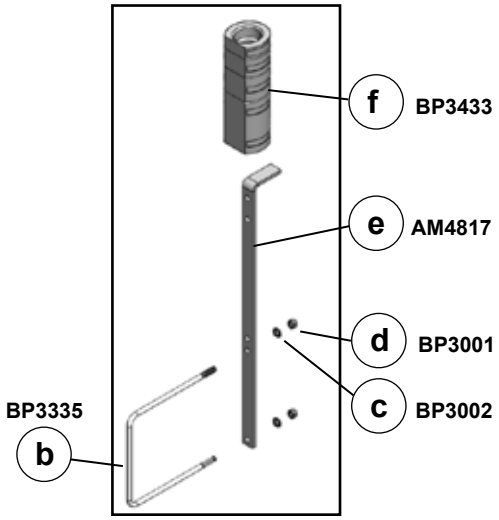

Assembly (Hose Retainers)

AT7000	Task	Procedures	Illustrations
▶	Hose holders and depth collar storage bracket		
▶	**NOTE:** Right-hand and left-hand as viewed from the rear		

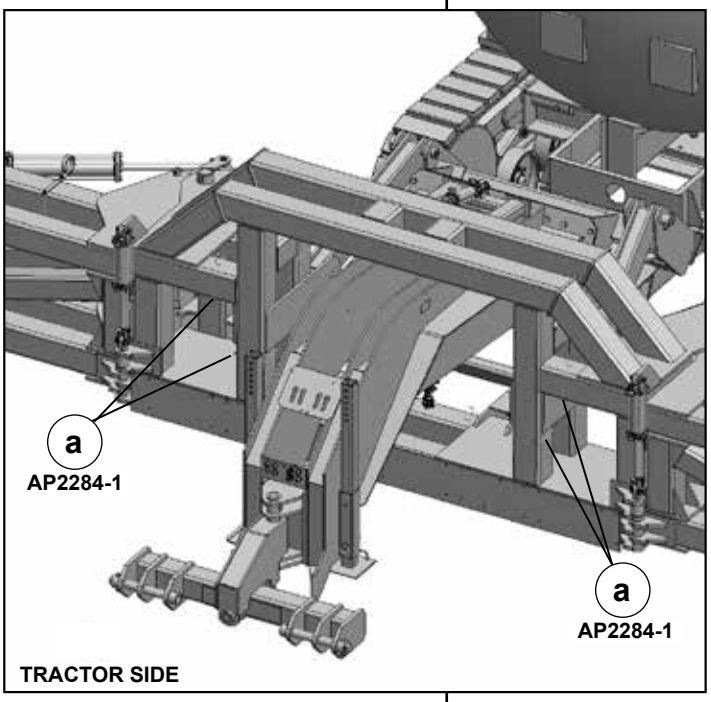

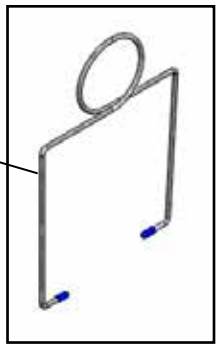

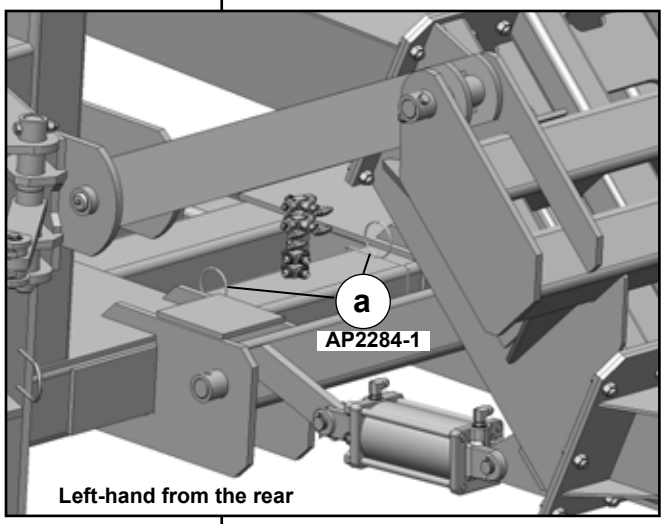

AP2282-1

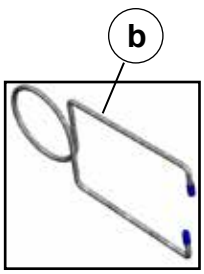

1. Install eight (a) (AP2284-1) 7 x 7 hose retainers on center sections.
2. Attach (b) (AP2282-1) 4 x 6 hose retainer to secondary wing each side.

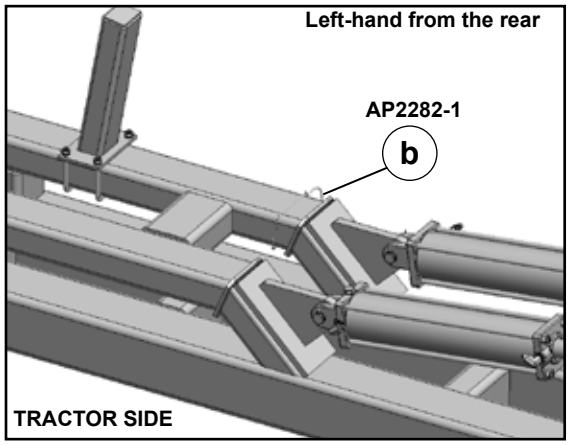

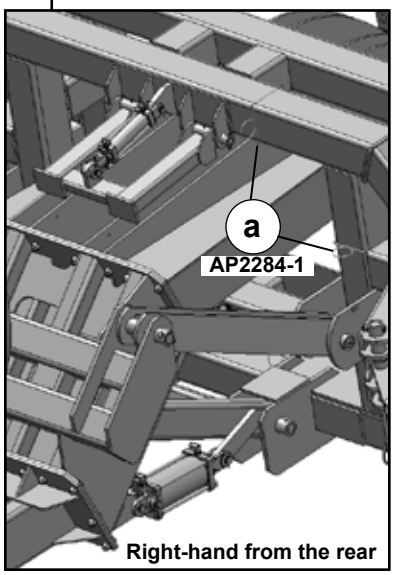

Assembly (Bulkhead Union Installation)

AT7000	Task	Procedures	Illustrations
►	**Bulkhead union mounting**		

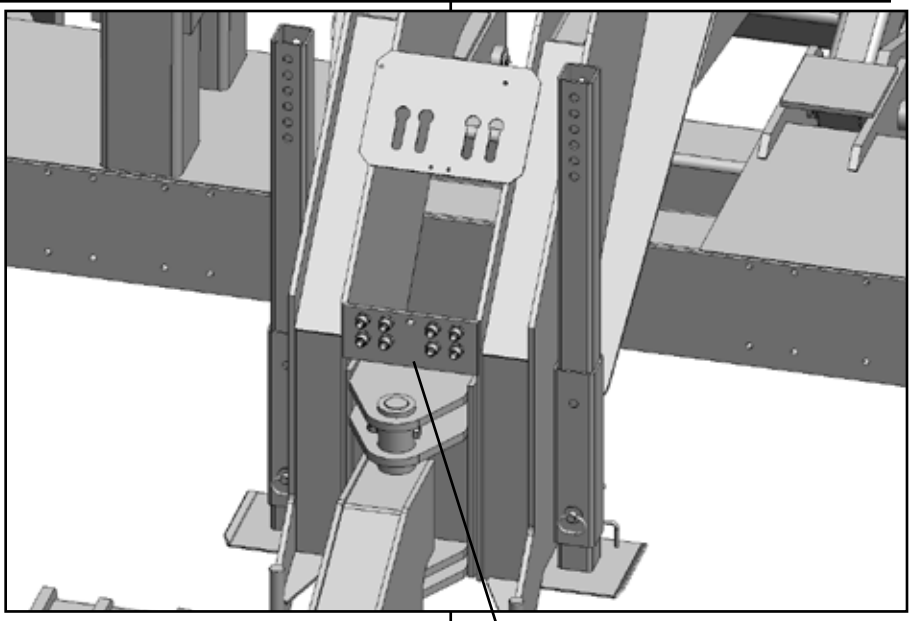

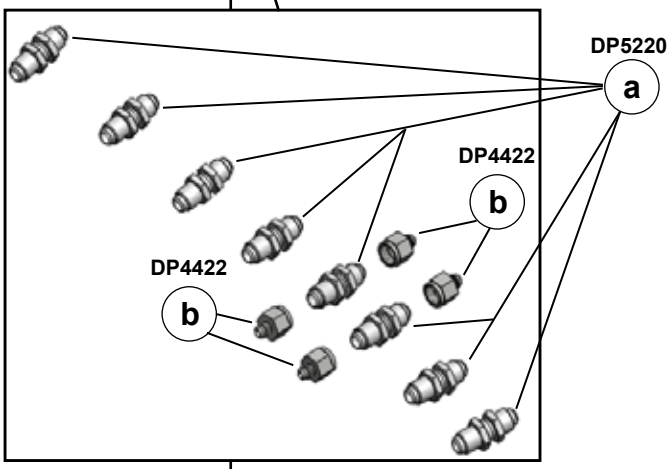

1. **Install eight (a) (DP5220) 10MJ-10MJ bulkhead union w/ nuts on tongue weldment.**
2. **Install four (b) (DP4422) 10FJ-6MJ adapters on second row of (a) bulkhead unions.**

Assembly (Lift Cylinder Hoses Installation)

AT7000	Task	Procedures	Illustrations

▶ Lift cylinder hose installation

▶ **NOTE:** Right-hand and left-hand as viewed from the rear

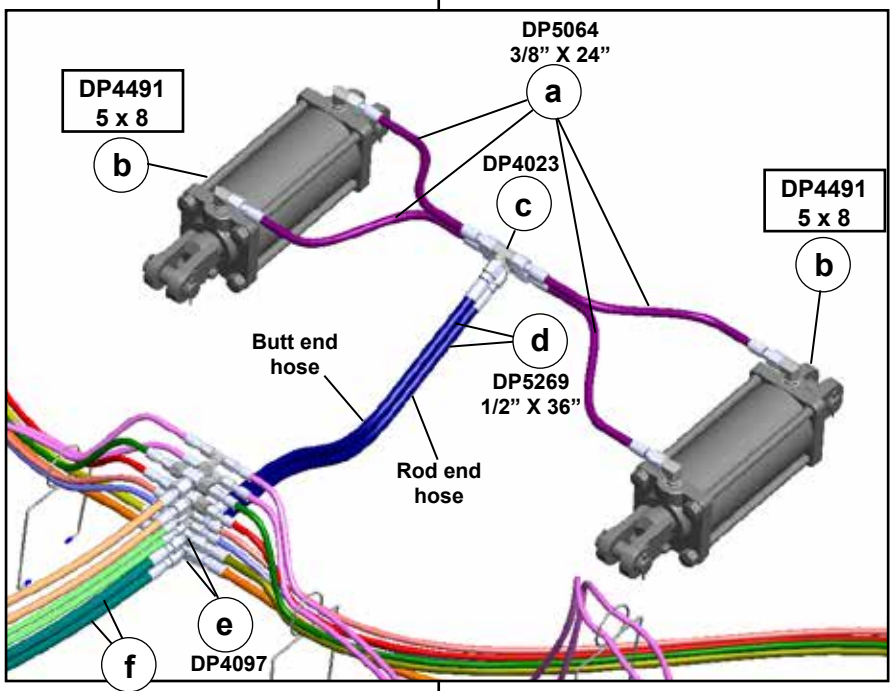

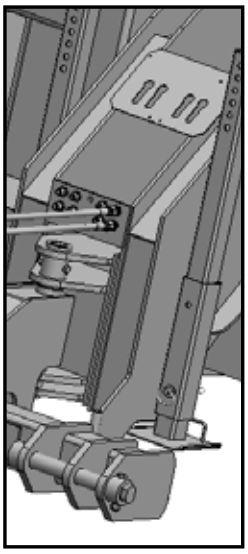

▶ **NOTE:** Right-hand and left-hand as viewed from the rear

1. Attach two (a) (DP5064) 3/8" x 24" (2') 10FJX-10FJX hoses to *rod* ends of (b) (DP4491) 5 x 8 cylinders. Extend hose to *bottom* (c) (DP4023) 10MJ-10MJ-10MJ tee and attach.
2. Attach two (a) (DP5064) 3/8"x 24" (2') 10FJX-10FJX hoses to *butt* ends of (b) (DP4491) 5 x 8 cylinders. Extend hose to *top* (c) (DP4023) 10MJ-10MJ-10MJ tee and attach.
3. Attach (d) (DP5269) 1/2" x 36" (3') 10FJX-10FJX hose to top and bottom tees. Extend hoses to tee tree on the center sections.
4. Install (e) (DP4097) 10MJ-10MJ 10MJ-10MJ crosses.
5. Attach (f) (DP5212) 1/2" x 62" (5'2") 10FJX-10FJX hoses to crosses. Extend to left-hand bulkhead unions and attach rod end hose to bottom union and butt end hose to top union.
6. Install two (g) (DP5185) 1/2" x 84" (7') 10MJX-10MJX hoses to the top and bottom left-hand bulkhead union.

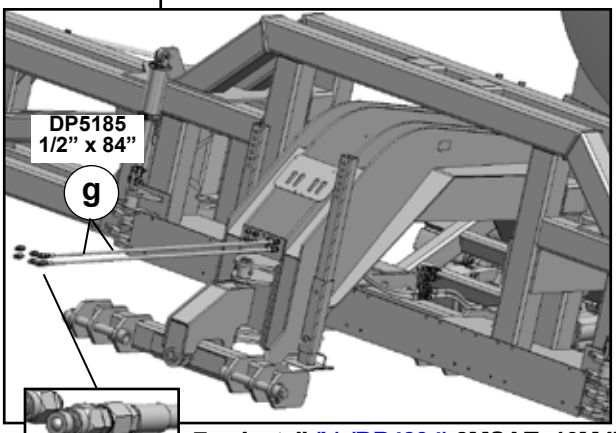

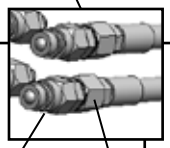

7. Install (h) (DP4394) 8MSAE- 10MJIC straight adapters on hose ends.
8. Install (i) (DP4383) pioneer 8FSAE nipples to each straight adapter.
9. Extend hoses and place in slotted holes on tongue.

Assembly (Secondary Wing Cylinder Hoses)

AT7000	Task	Procedures	Illustrations

► Secondary wing cylinder hose installation

► **NOTE:** Right-hand and left-hand as viewed from the rear

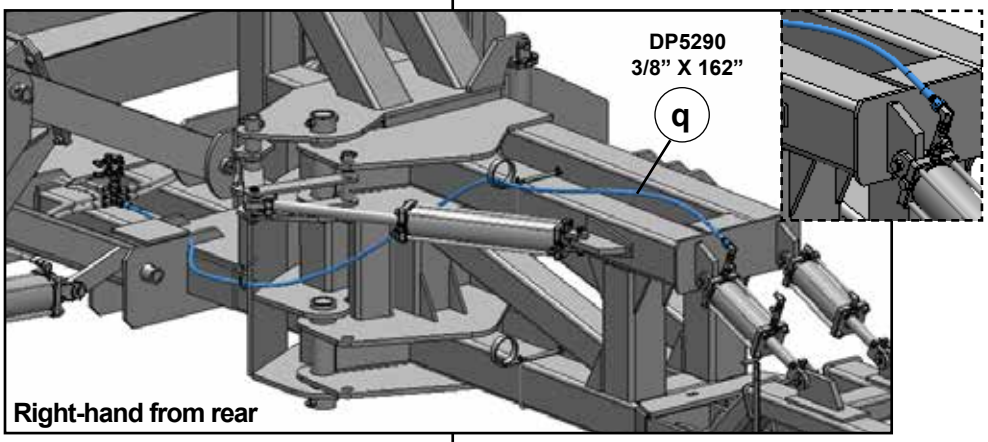

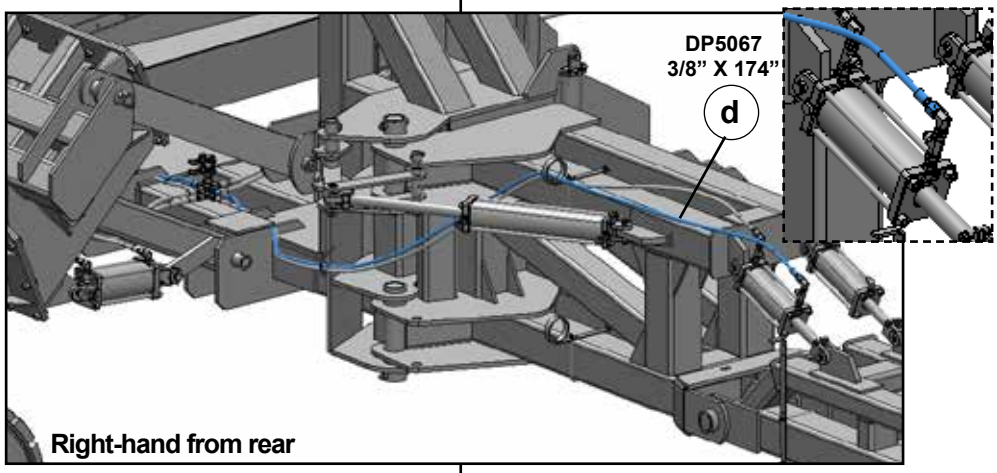

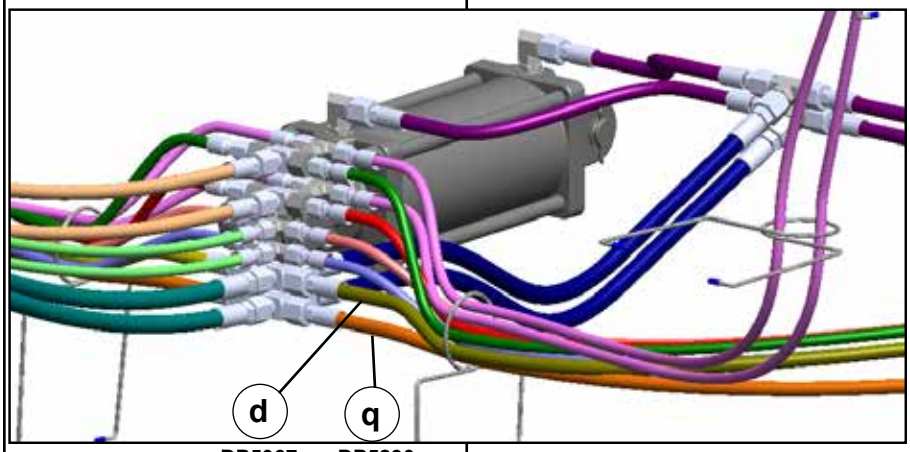

1. Attach four (c) (DP5064) 3/8" x 24" (2') hoses, rod end to rod end and butt end to butt end on each side.

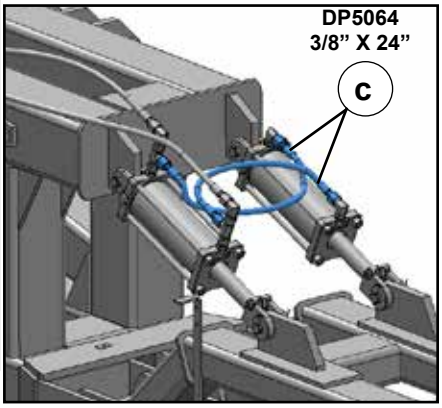

Assembly (Primary Wing Cylinder Hoses)

AT7000	Task	Procedures	Illustrations
▶	Primary wing cylinder hose installation		
▶	**NOTE:** Right-hand and left-hand as viewed from the rear		

1. Attach (l) (DP5285) 1/4" x 160" (13'4") 6FJX-6FJX to third (a) (DP4004) 6MJ-6MJ-6MJ tee on each side of tee. Extend through hose holders to primary wing cylinders butt end center port and attach.

2. Attach (m) (DP5286) 1/4" x 178" (14'10") 6FJX-6FJX to fourth (a) (DP4004) 6MJ-6MJ-6MJ tee on each side of tee. Extend through hose holders to primary wing cylinders rod end center port and attach.

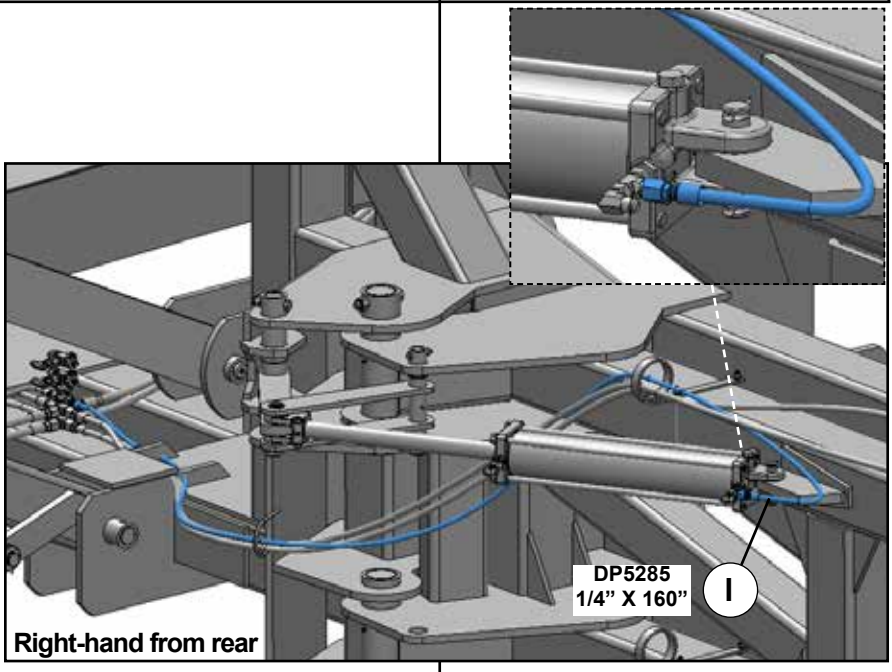

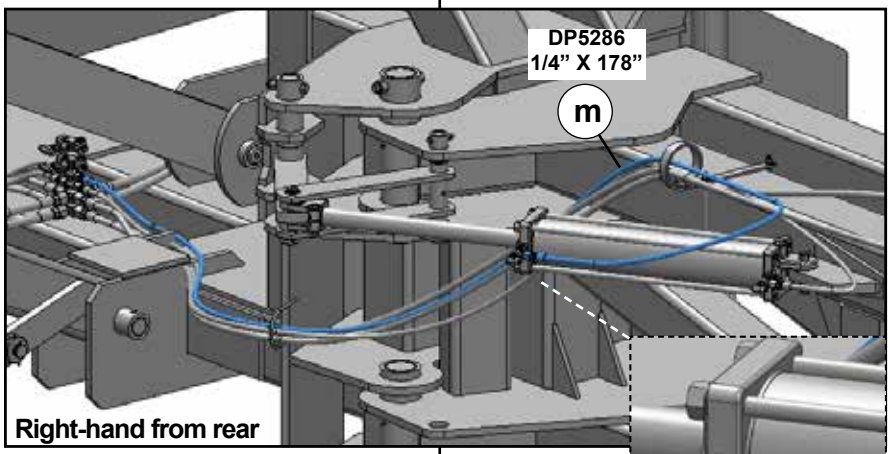

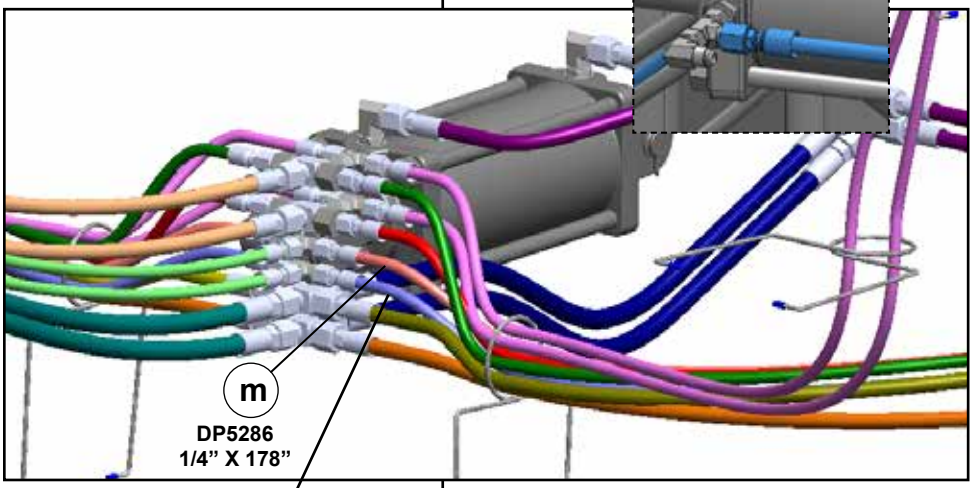

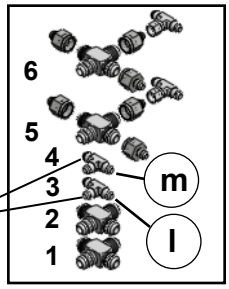

Assembly (Transport Lock Cylinder Hoses)

AT7000	Task	Procedures	Illustrations
►	Transport lock cylinder hoses installation		
►	**NOTE:** Right-hand and left-hand as viewed from the rear		

1. Attach (k) (DP5284) 1/4" x 136" (11'4") 6FJX-6FJX to rod end of transport lock cylinder. Extend hose through hose holders and attach to butt end top port of primary wing cylinder.

2. Attach (k) (DP5284) 1/4" x 136" (11'4") 6FJX-6FJX to butt end of transport lock cylinder. Extend hose through hose holders and attach to rod end top port of primary wing cylinder.

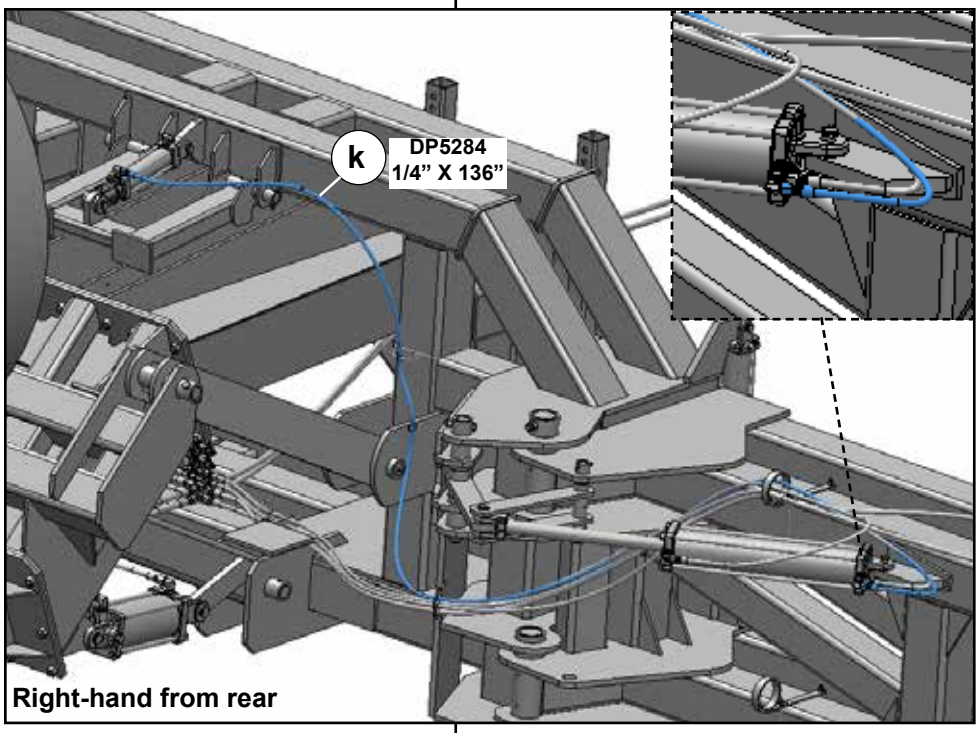

Right-hand from rear

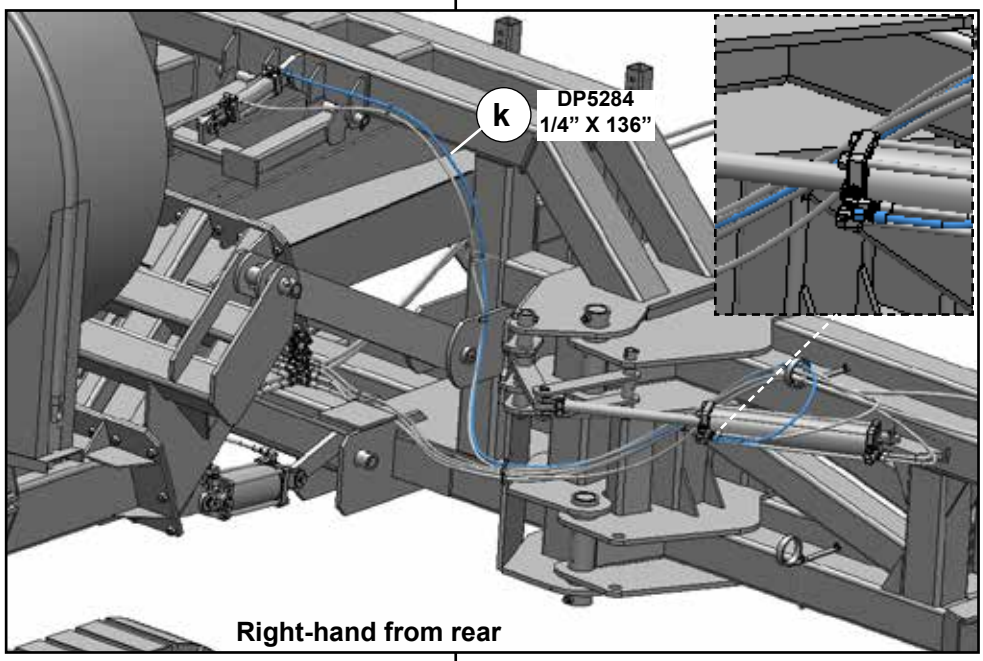

Right-hand from rear

Assembly (Third Wing Cylinder Hoses)

AT7000	Task	Procedures	Illustrations

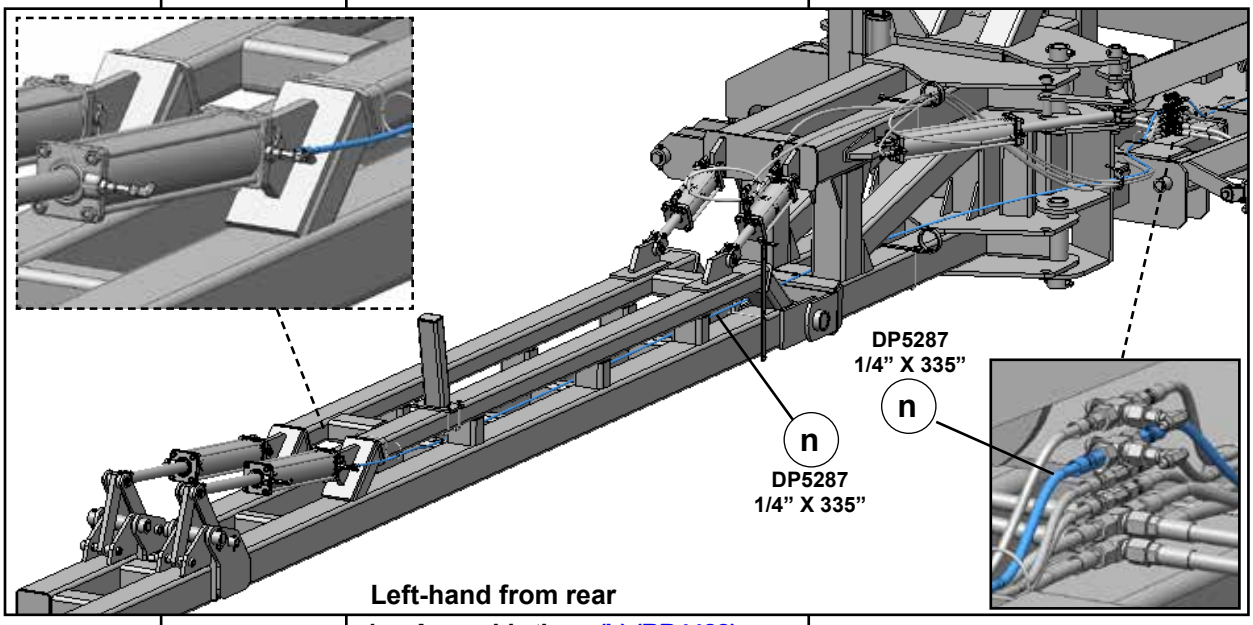

▶ Third wing cylinder hoses installation

▶ **NOTE:** Right-hand and left-hand as viewed from the rear

1. Assemble three (b) (BP4422) 10FJ-6MJ adapters on (a) (DP4097) 10MJ-10MJ-10MJ-10MJ cross.

2. Attach (c) (DP4550) 6FJX-6MJ-6MJ tee to rear (b) (DP4422) 10FJ-6MJ adapters port on each assembly.

3. Attach (n) (DP5287) 1/4" x 335" (27'11") 6FJX-6FJX hose to butt end center port of third wing cylinders. Extend hose through wing frames and hose holders to (a) (DP4097) tee assembly number 5 on each side.

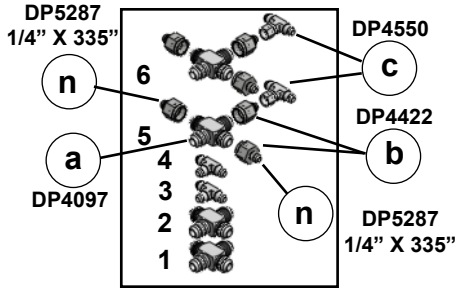

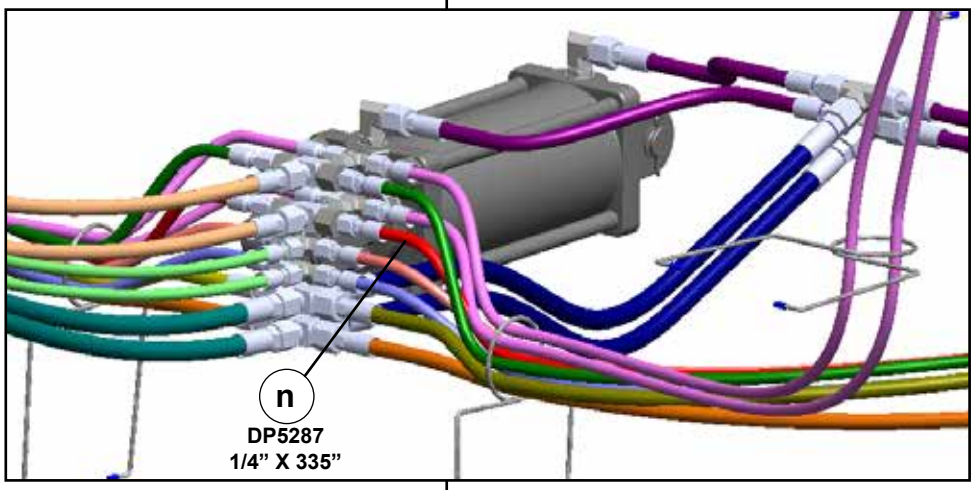

Assembly (Third Wing Cylinder Hoses)

AT7000	Task	Procedures	Illustrations

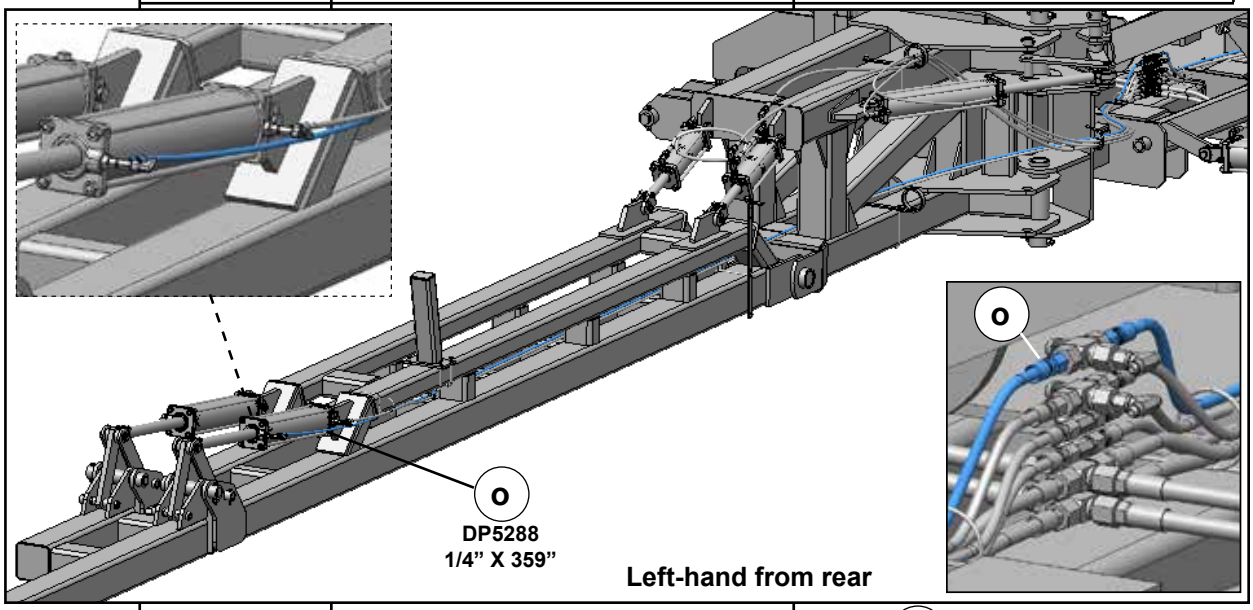

▶ Third wing cylinder hoses installation

▶ **NOTE:** Right-hand and left-hand as viewed from the rear

WARNING Keep bystanders away during assembly

1. Attach (o) (DP5288) 1/4" x 335" (27'11") 6FJX-6FJX hose to rod end center port of third wing cylinders. Extend hose through wing frames and hose holders to (a) (DP4097) tee assembly number 6 on each side.

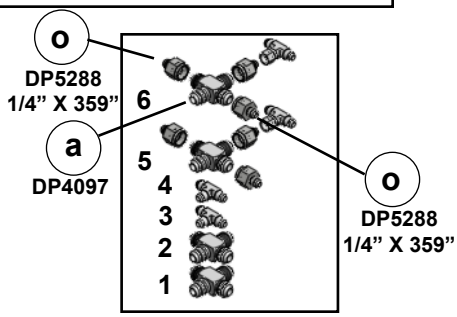

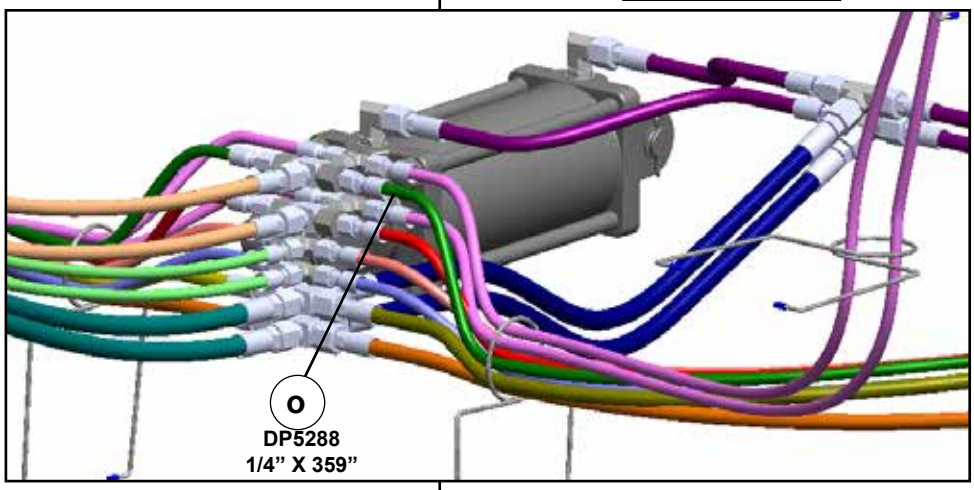

2. Connect cylinder rod ends with (b) (DP5057) 1/4" x 36" (3').
3. Connect cylinder butt ends with (b) (DP5057) 1/4" x 36" (3').
4. Repeat (b) hose installation on the right-hand third wing cylinders.

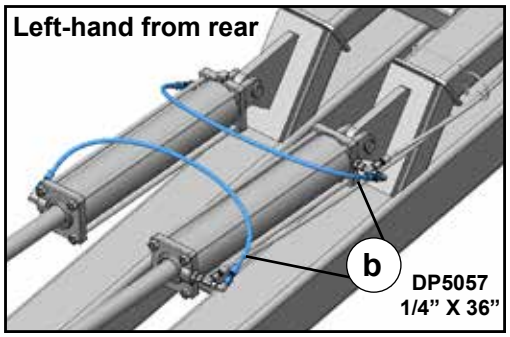

Assembly (Wing Lock Cylinder Hoses)

AT7000	Task	Procedures	Illustrations

▶ Wing lock cylinder hoses installation

▶ **NOTE:** Right-hand and left-hand as viewed from the rear

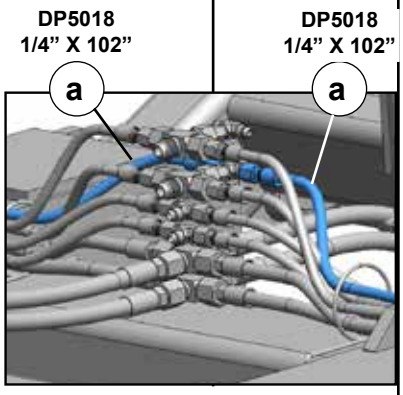

1. Connect (a) (DP5018) 1/4" x 102" (8'6") 6FJX-6FJX hose to butt end of wing lock cylinders. Extend hose through hose holders and attach to number 5 rear tee on each side.

2. Connect (a) (DP5018) 1/4" x 102" (8'6") 6FJX-6FJX hose to rod end of wing lock cylinders. Extend hose through hose holders and attach to number 6 rear tee on each side.

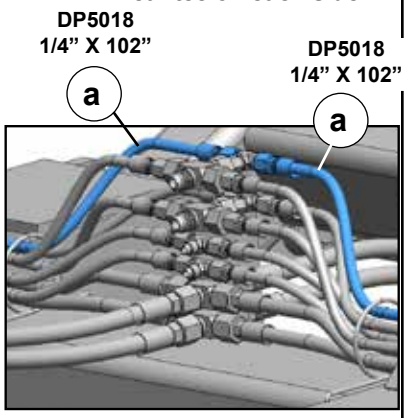

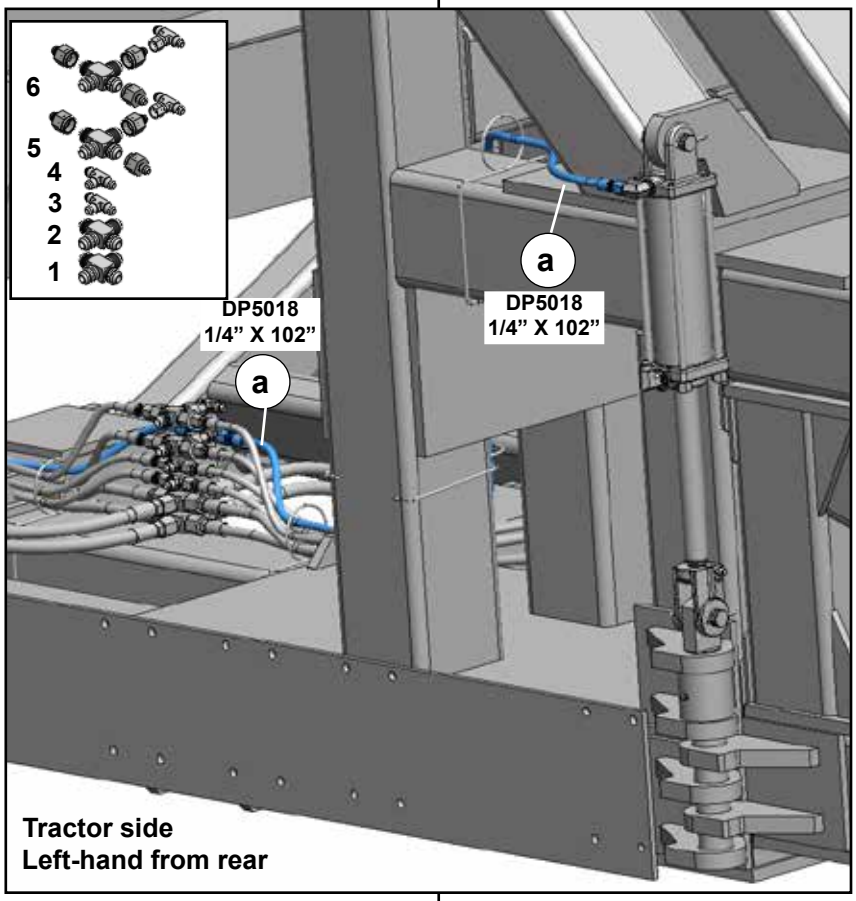

Tractor side
Left-hand from rear

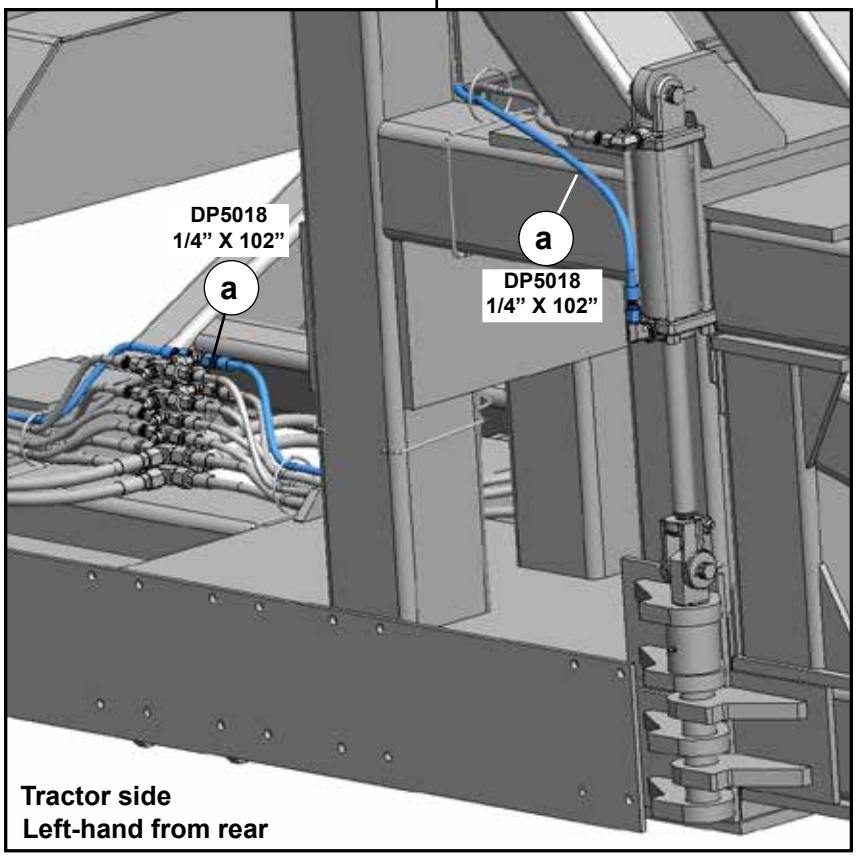

Tractor side
Left-hand from rear

Assembly (Tee Stack No.3 and No.4 Hoses)

AT7000	Task	Procedures	Illustrations

► Tee stacked hoses to bulkhead union

► **NOTE:** Right-hand and left-hand as viewed from the rear

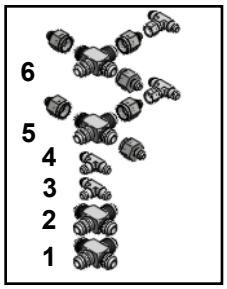

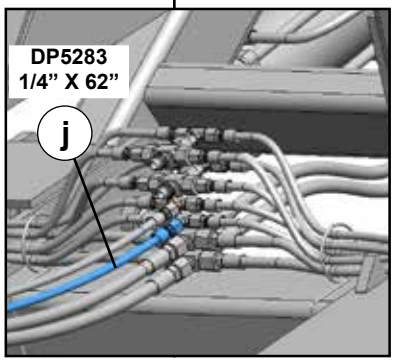

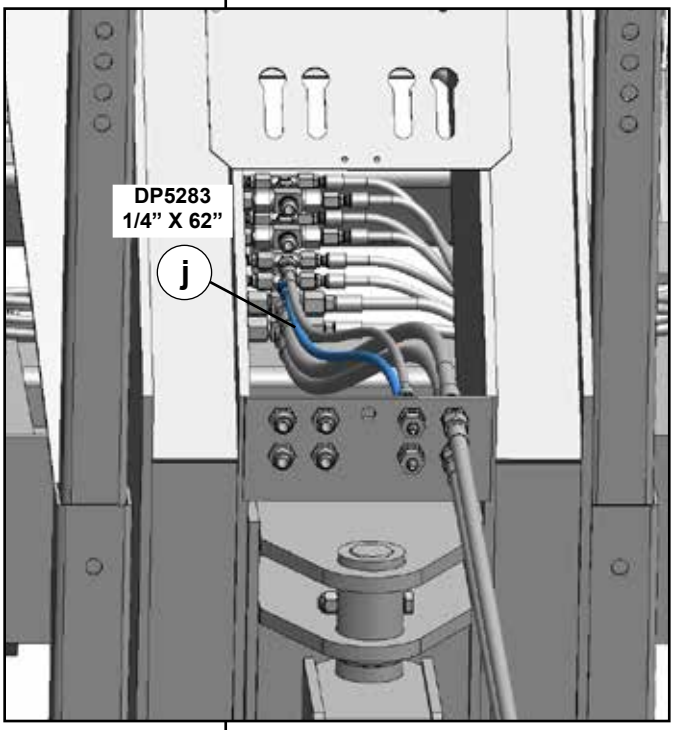

1. Connect (j) (DP5283) 1/4" x 62" (5'2") 6FJX-6FJX hose to number 3 tee and extend to bottom bulkhead union and secure.

2. Connect (j) (DP5283) 1/4" x 62" (5'2") 6FJX-6FJX hose to number 4 tee and extend to top bulkhead union and secure.

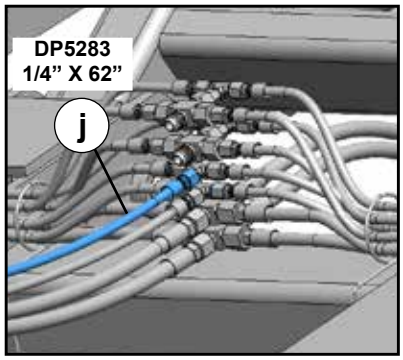

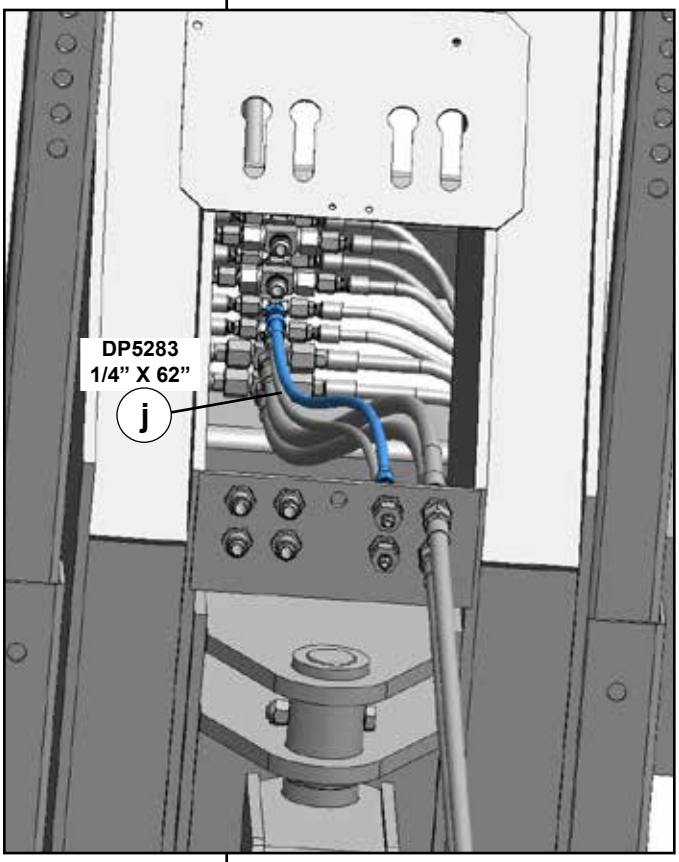

Assembly (Tee Stack No.5 and No.6 Hoses)

AT7000	Task	Procedures	Illustrations

▶ Tee stacked hoses to bulkhead union

▶ **NOTE:** Right-hand and left-hand as viewed from the rear

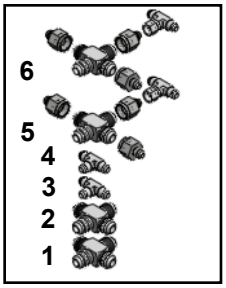

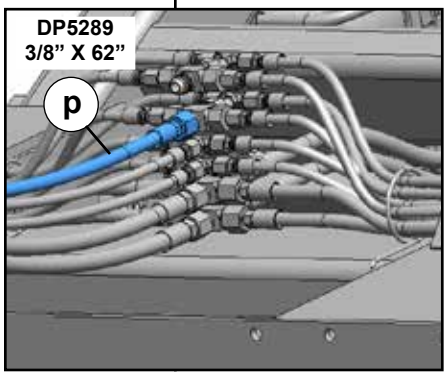

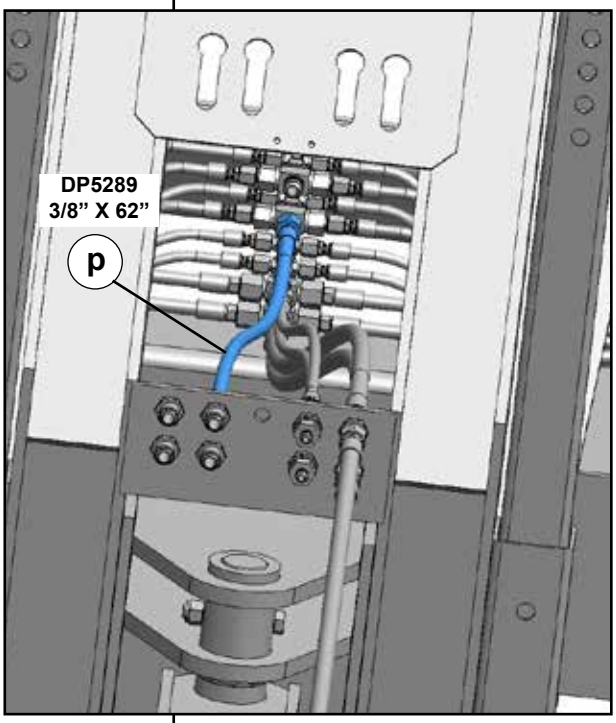

1. Connect (p) (DP5289) 3/8" x 62" (5'2") 6FJX-6FJX hose to number 5 tee and extend to bottom bulkhead union and secure.

2. Connect (p) (DP5289) 3/8" x 62" (5'2") 6FJX-6FJX hose to number 6 tee and extend to top bulkhead union and secure.

DP5289
3/8" X 62"

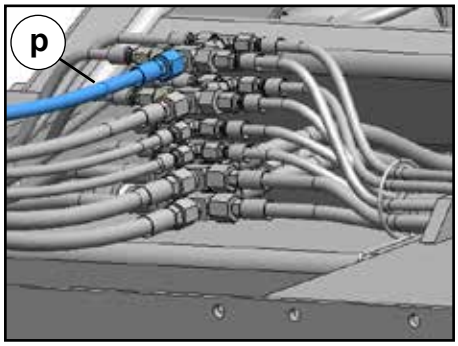

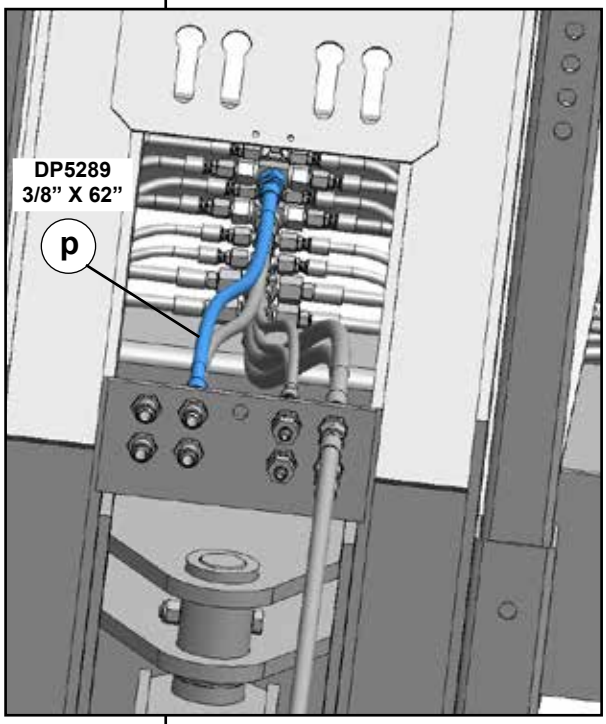

Assembly (Hoses To Tractor)

AT7000	Task	Procedures	Illustrations

- Hoses from bulkhead unions to tractor
- **NOTE:** Right-hand and left-hand as viewed from the rear

1. Connect two (e) (DP5152) 3/8" x 84" (7') 6FJX-6FJX hoses to bulkhead union.
2. Install (a) (DP4394) 8MSAE-6MJIC adapters and (b) (DP4383) 8FSAE. pioneer nipples to each 1/4" hose.

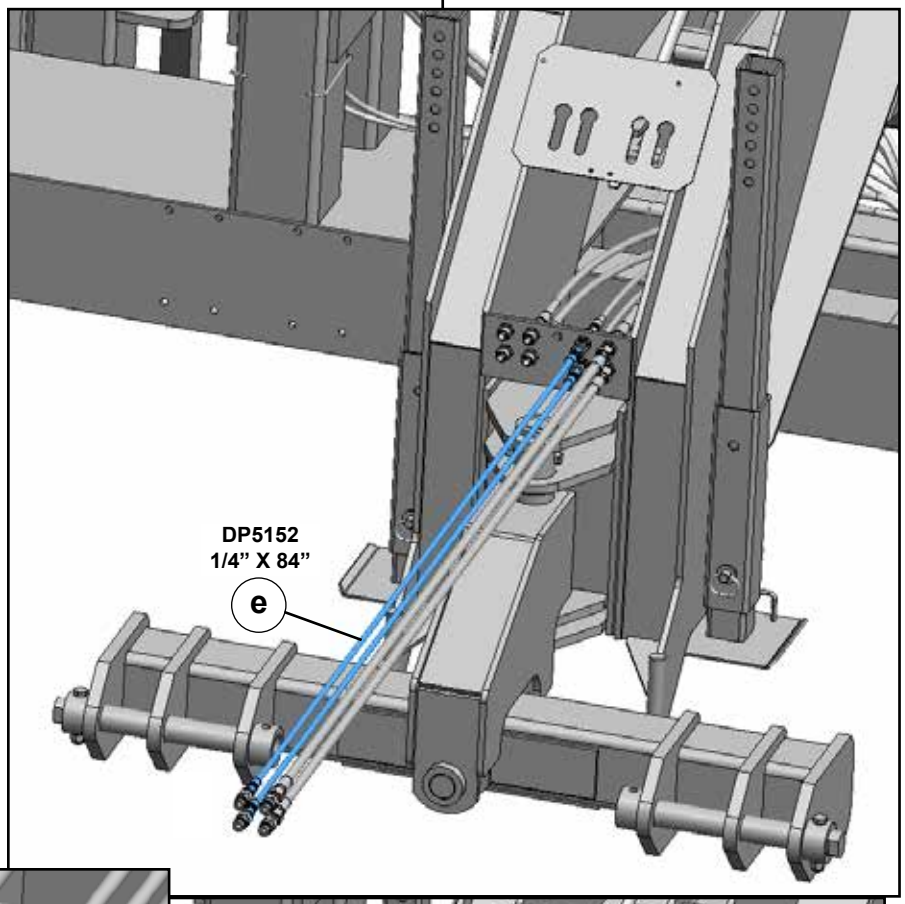

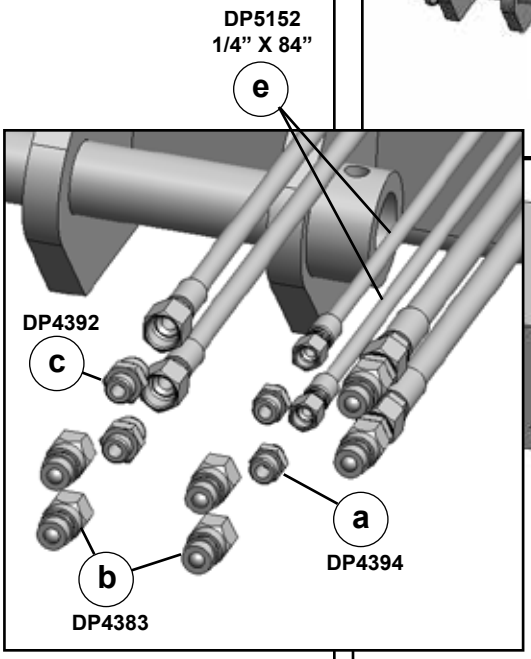

3. Connect two (f) (DP5166) 3/8" x 84" (7') 10FJX-10FJX hoses to bulk-head union.
4. Install (c) (DP4392) 8MSAE-10MJIC straight adapters and (b) (DP4383) 8FSAE. pioneer nipples to each 3/8" hose.

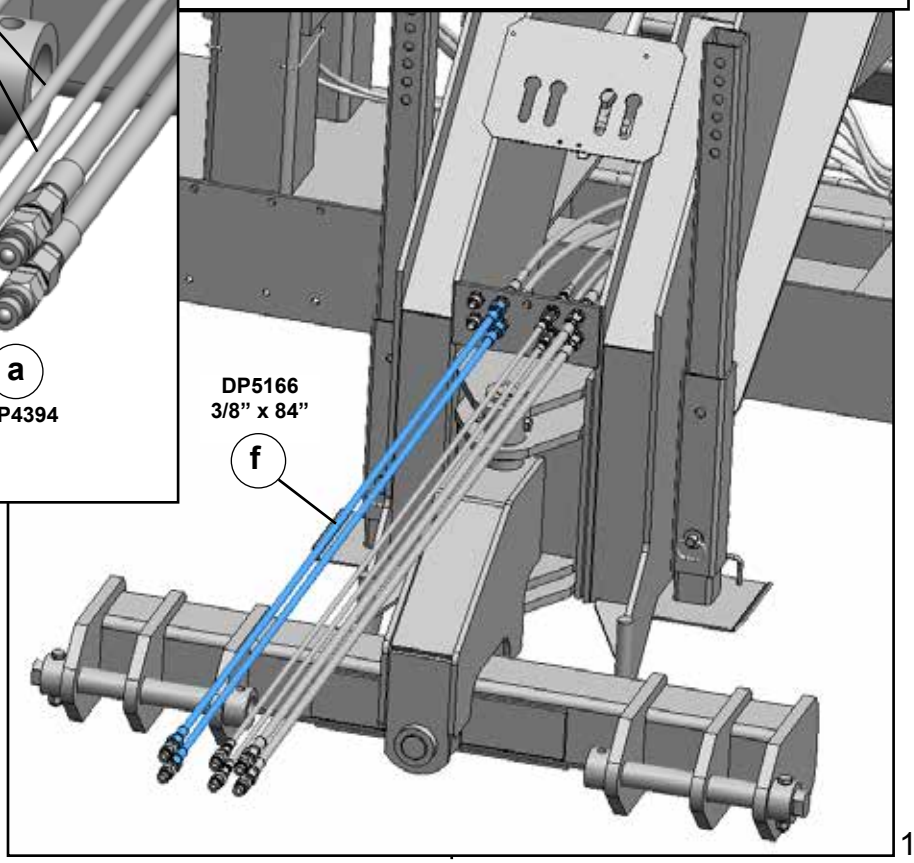

Task	Procedures	Illustrations

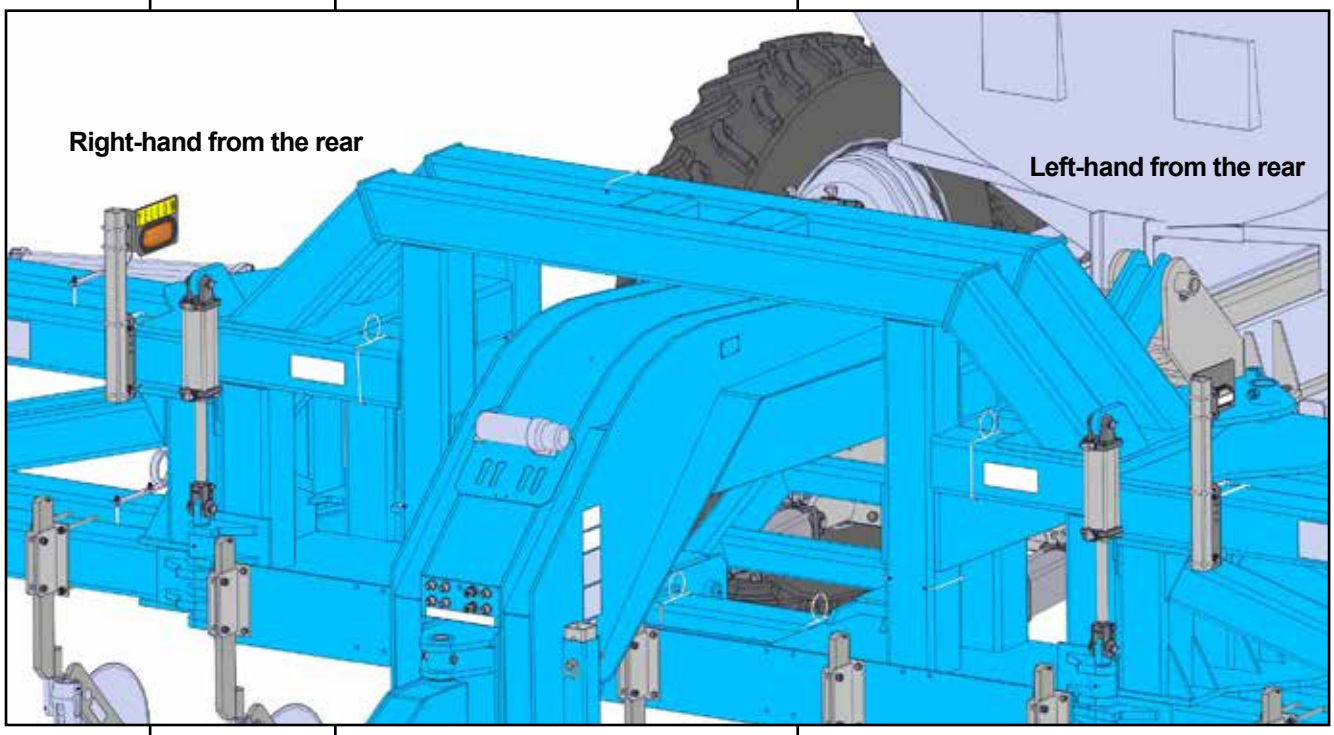

Task	Procedures	Illustrations
► Light Kit assembly main frame tube mounting	1. Place (a) (AM3408) mounting plate light post T on primary wing near hinge. Insert (b) (BP3335) 3/8" x 7"W x 8"L u-bolts from bottom into plate. Secure with (c) (CP2660) 3/8" hex nuts, Nylock.	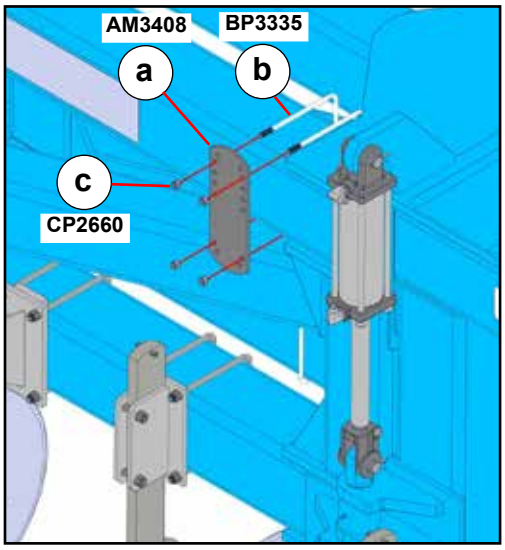
	2. Place (d) (AM 3407) 1'11-7/8" light bracket tube on mounting plate. Bottom of tube even with bottom of plate. Insert (e) (BP3736) 3/8" x 2"W x 3"L u-bolts over tube. Secure with (c) (CP2660) 3/8" hex nuts, Nylock.	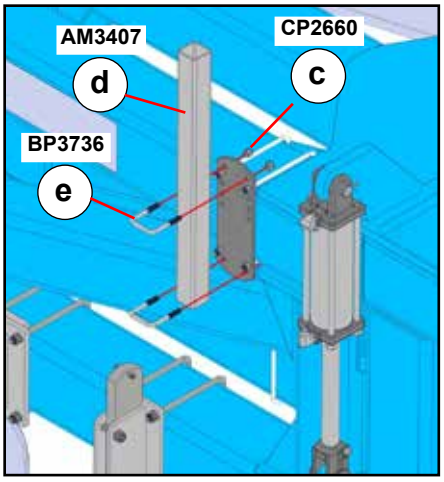

Task	Procedures	Illustrations

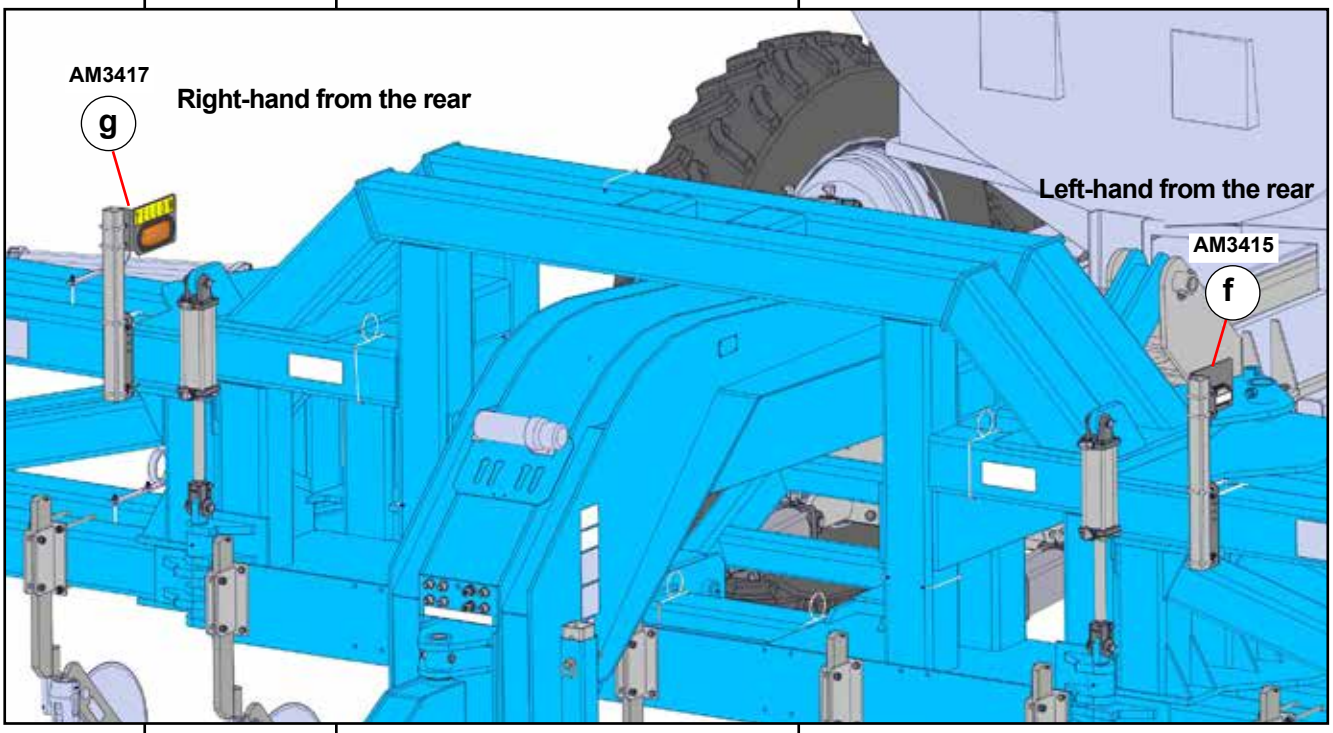

▶	Light Kit assembly inside light brackets and Amber lamps	1. Attach (f) (AM3415) light bracket, front, Left-hand and (g) (AM3417) light bracket, front, Right-hand to top of tube with (e) (BP3736) 3/8" x 2"W x 3"L u-bolts and (c) (CP2660) 3/8" hex nuts, Nylock.	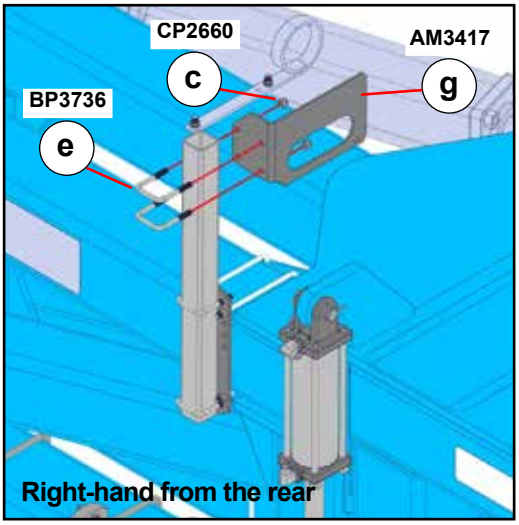
		2. Insert (h) (AP3551) oval grommet model 60 into light bracket. Install (i) (AP4415) Amber LED turn signal lamp into grommet. 3. Position (j) (AP2547) Yellow reflector decal above lamp.	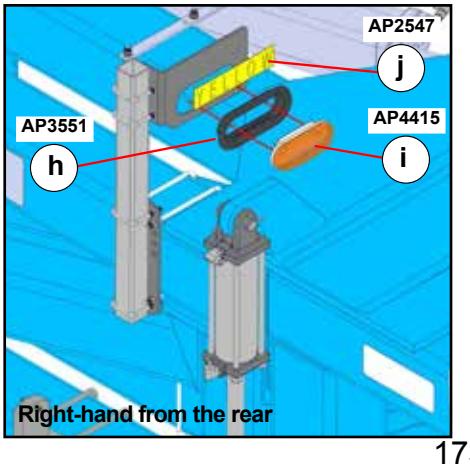

Task	Procedures	Illustrations

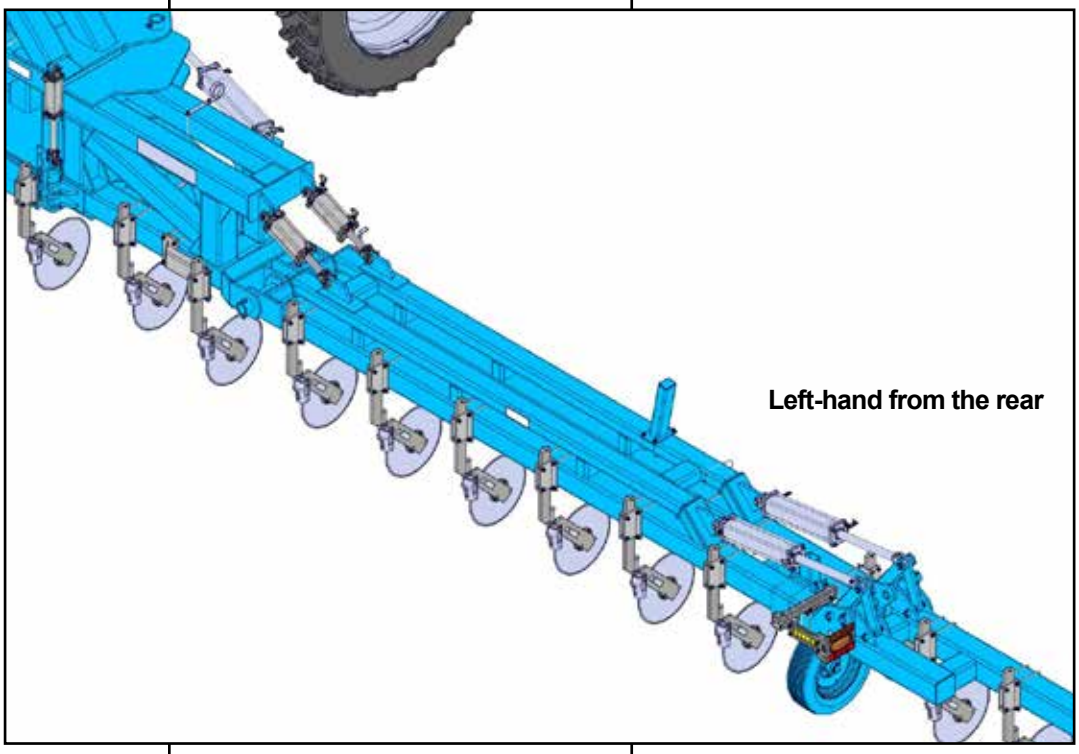

Task	Procedures	Illustrations
▶ Light Kit assembly outside wing light brackets and Amber lamps	1. Place (a) (AM3408) mounting plate light post T on secondary wing near hinge weldment. Insert (b) (BP3335) 3/8" x 7"W x 8"L u-bolts from bottom into plate. Secure with (c) (CP2660) 3/8" hex nuts, Nylock.	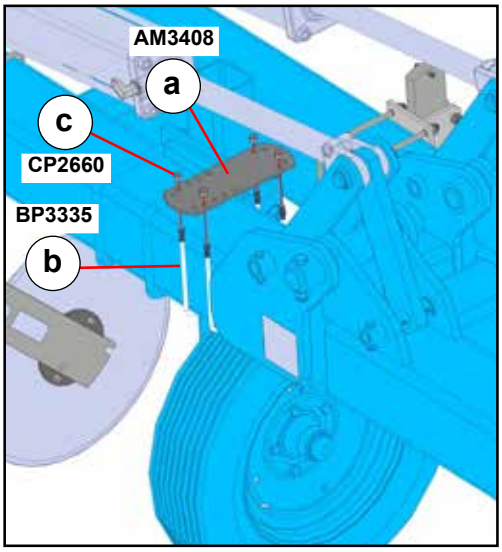
	2. Place (k) (AM3419) 1'5-7/8" light bracket tube on mounting plate. Bottom of tube even with inside curve of plate. Insert (e) (BP3736) 3/8" x 2"W x 3"L u-bolts over tube. Secure with (c) (CP2660) 3/8" hex nuts, Nylock.	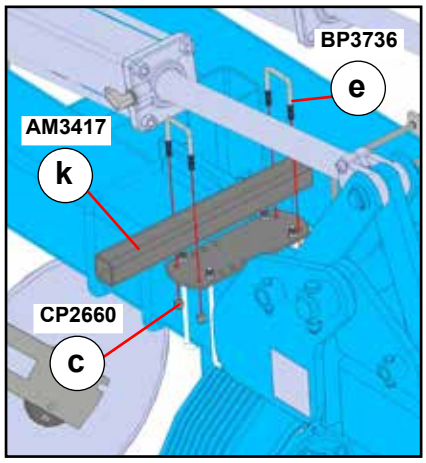

Assembly (Light Kit)

AT7000	Task	Procedures	Illustrations

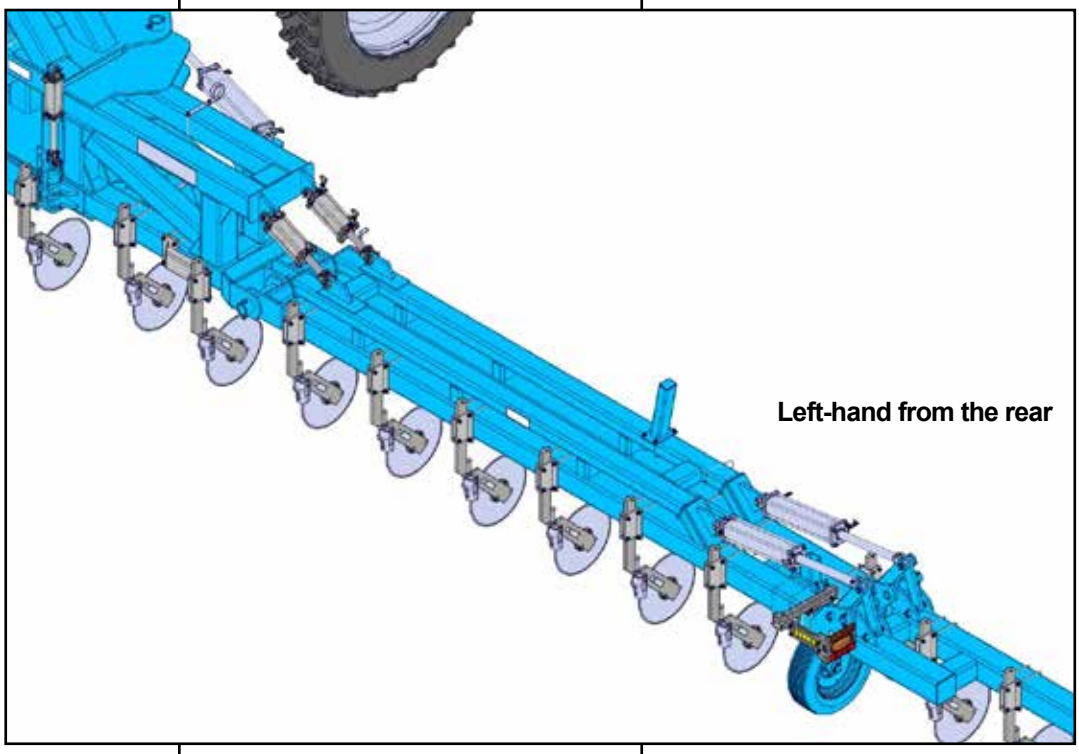

► Light Kit assembly outside wing light brackets and Amber lamps	1. Place (l) (AM3410) mounting plate light post on end of tube. Insert (b) (BP3335) 3/8" x 7"W x 8"L u-bolts from bottom into plate. Secure with (c) (CP2660) 3/8" hex nuts, Nylock.	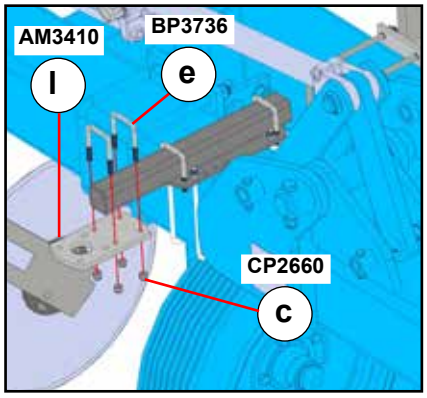
	2. Place (k) (AM3419) 1'5-7/8" light bracket tube on mounting plate. End of tube even with side of plate. Insert (e) (BP3736) 3/8" x 2"W x 3"L u-bolts over tube. Secure with (c) (CP2660) 3/8" hex nuts, Nylock.	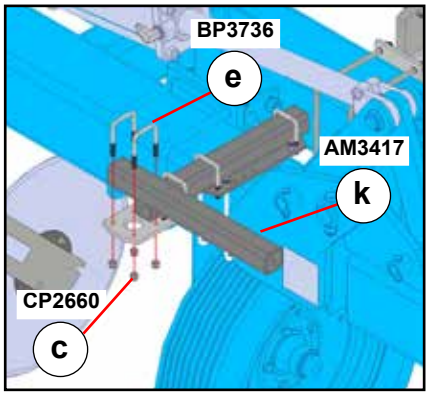

Assembly (Light Kit)

AT7000	Task	Procedures	Illustrations
▶	Light Kit assembly outside wing light brackets and Amber lamps	1. Attach (m) (AM3414) rear light bracket to tube with (e) (BP3736) 3/8" x 2"W x 3"L u-bolts. Secure with (c) (CP2660) 3/8" hex nuts, Nylock.	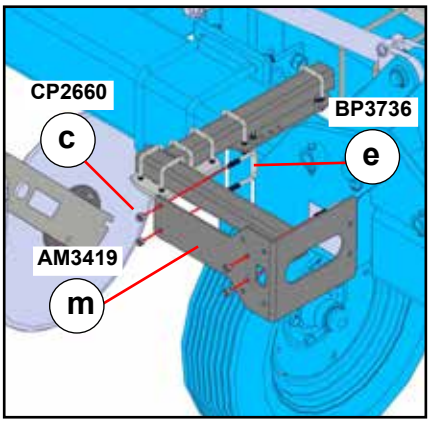
		2. Insert (h) (AP3551) oval grommet model 60 into light bracket. Install (i) (AP4415) Amber LED turn signal lamp into grommet.	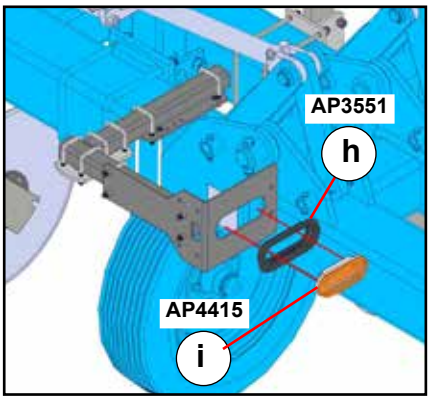
		3. Attach (j) (AP2547) Yellow reflector decal to front side of light bracket. Attach (n) (AP2551) Red-orange fluorescent decal above the Amber lamp. Attach (o) (AP2548) Red fluorescent decal below the Amber lamp.	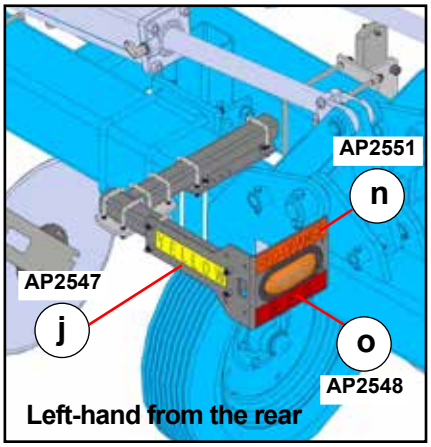 Left-hand from the rear 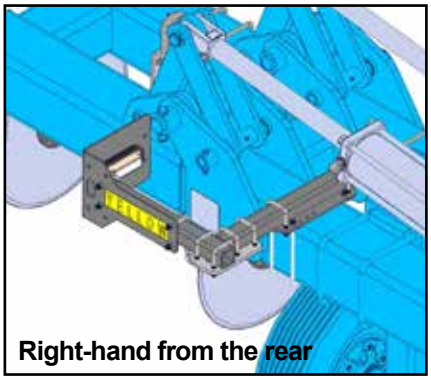 Right-hand from the rear

Task	Procedures	Illustrations

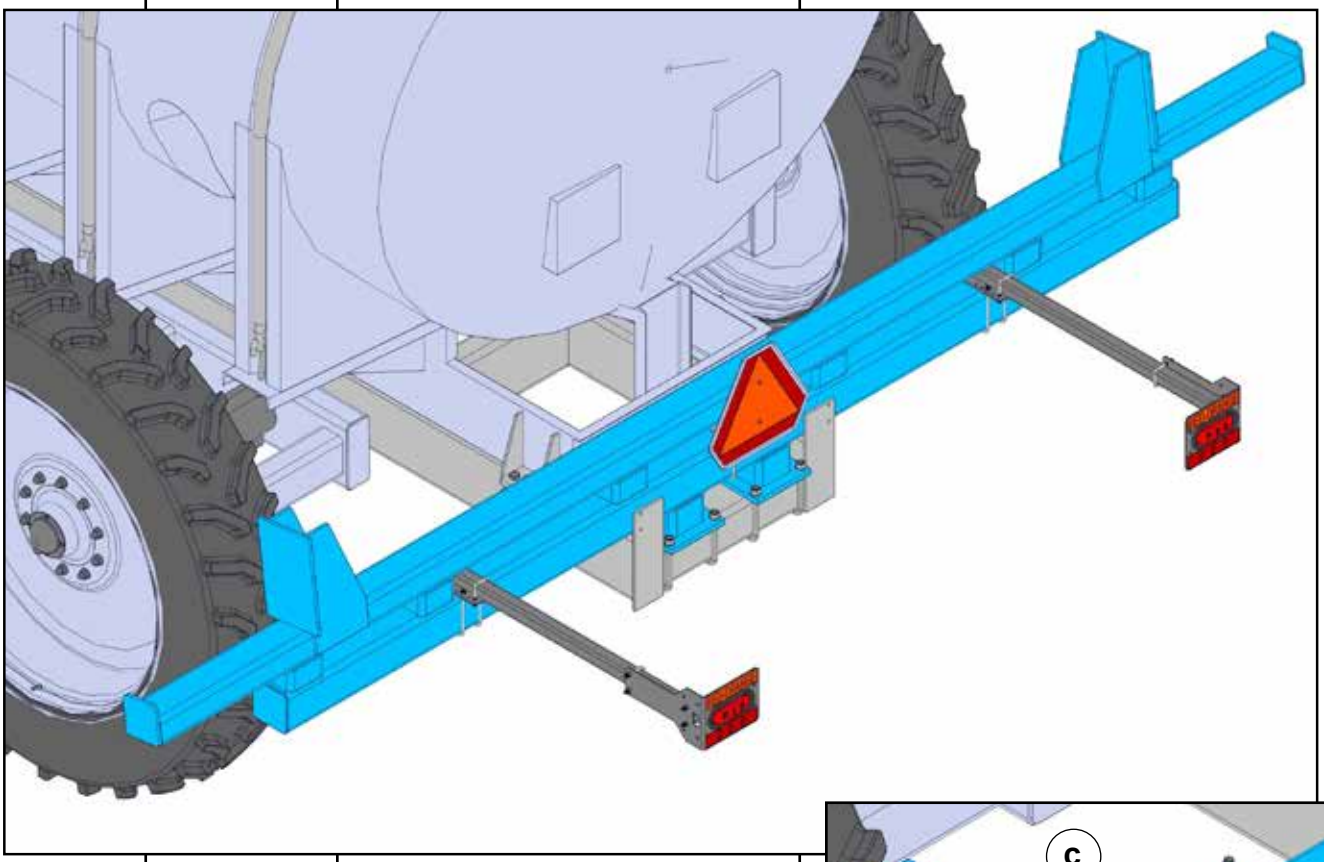

► Light Kit assembly rear light brackets and Red lamps	1. Place (a) (AM3408) mounting plate light post T on rear wing support brace lower tube next to inside weldment. Insert (b) (BP3335) 3/8" x 7"W x 8"L u-bolts from bottom into plate. Secure with (c) (CP2660) 3/8" hex nuts, Nylock.	
	2. Place (p) (AM3416) 4'-0" light bracket tube on mounting plate. Inside end of tube even with inside curve of plate. Insert (e) (BP3736) 3/8" x 2"W x 3"L u-bolts over tube. Secure with (c) (CP2660) 3/8" hex nuts, Nylock.	

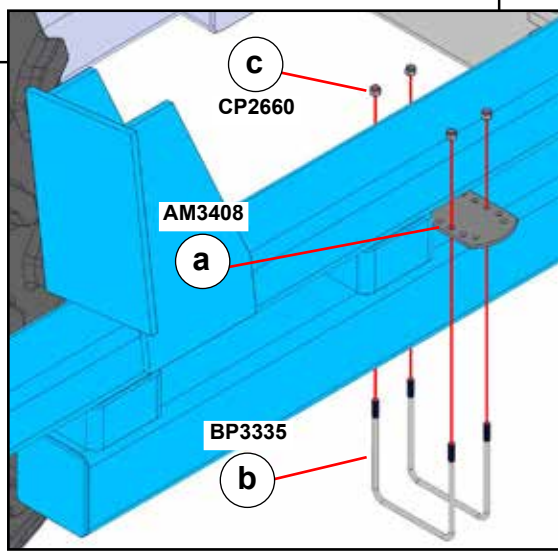

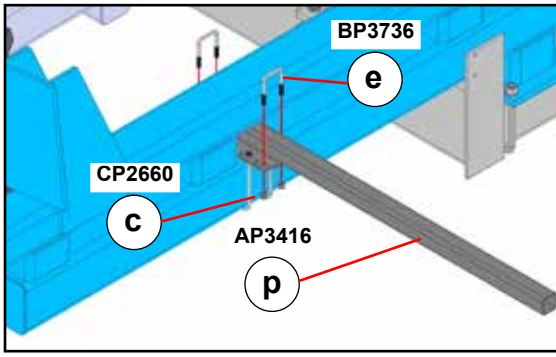

Assembly (Light Kit)

AT7000	Task	Procedures	Illustrations
▶	Light Kit assembly rear light brackets and Red lamps	1. Attach (m) (AM3414) rear light bracket to tube with (e) (BP3736) 3/8" x 2"W x 3"L u-bolts. Secure with (c) (CP2660) 3/8" hex nuts, Nylock.	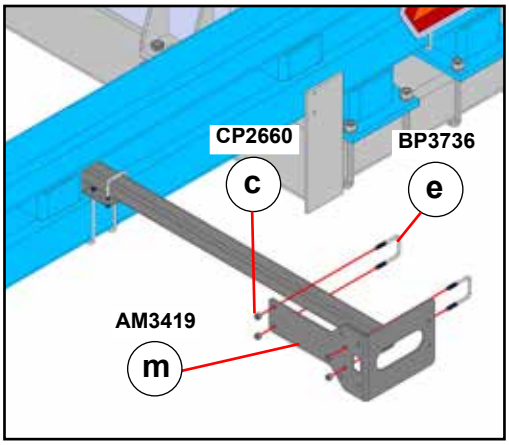
		2. Insert (h) (AP3551) oval grommet model 60 into light bracket. Install (q) (AP4412) Red LED lamp into grommet.	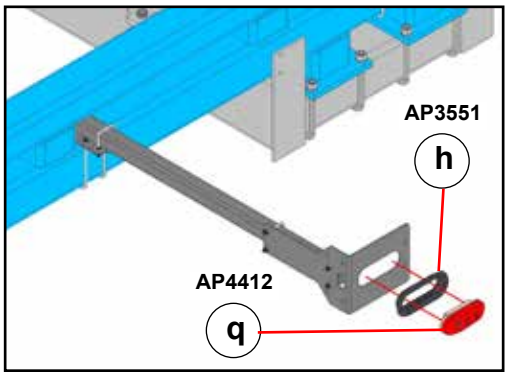
		3. Attach (n) (AP2551) Red-orange fluorescent decal above the Amber lamp. Attach (o) (AP2548) Red fluorescent decal below the Amber lamp.	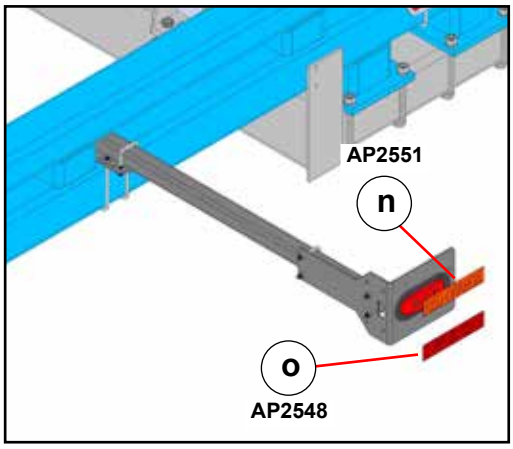

Task	Procedures	Illustrations
► Light Kit assembly SMV sign mounting	1. Center (r) (AM4077) SMV bracket on rear wing support brace lower tube. Insert (b) (BP3331) 3/8" x 6"W x 7"L u-bolts from bottom into plate. Secure with (c) (CP2660) 3/8" hex nuts, Nylock.	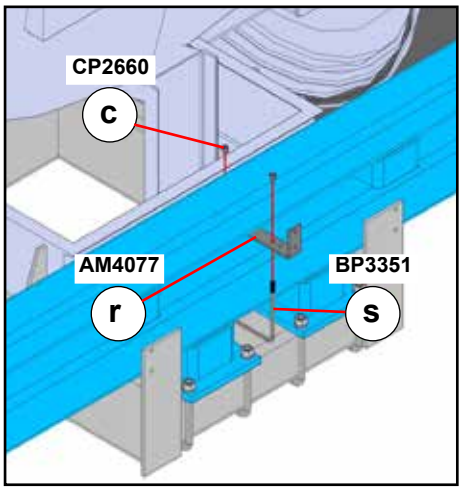
	2. Attach (t) (AP2343) SMV mounting socket with hardware provided with socket.	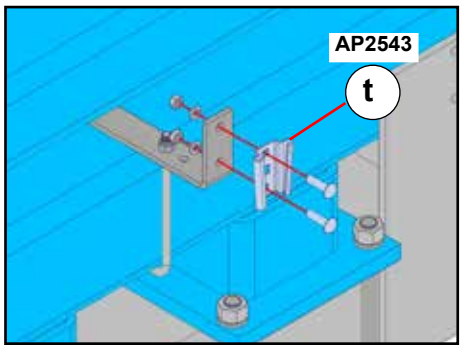
	3. Attach (u) (AP2544) SMV mounting spade to (s) (AP2542) with hardware provide. Insert SMV sign into socket.	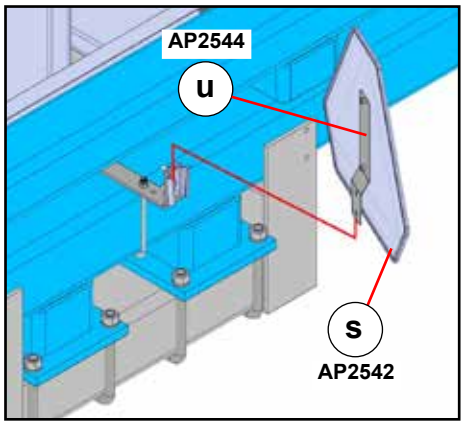
► Light Kit assembly dust cap mounting	4. Mount (w) (AP3142) dust cap (Part of harness AP3142) with (x) (BP3233) 1/4" x 3/4" hex cap screws, (y) (BP3055) 1/4" flat washers and (z) (BP3035) 1/4" hex nuts.	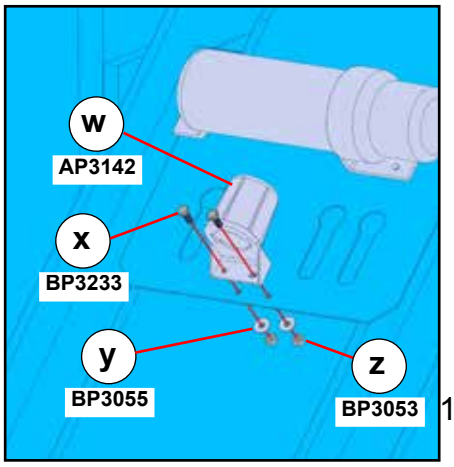

Task	Procedures	Illustrations

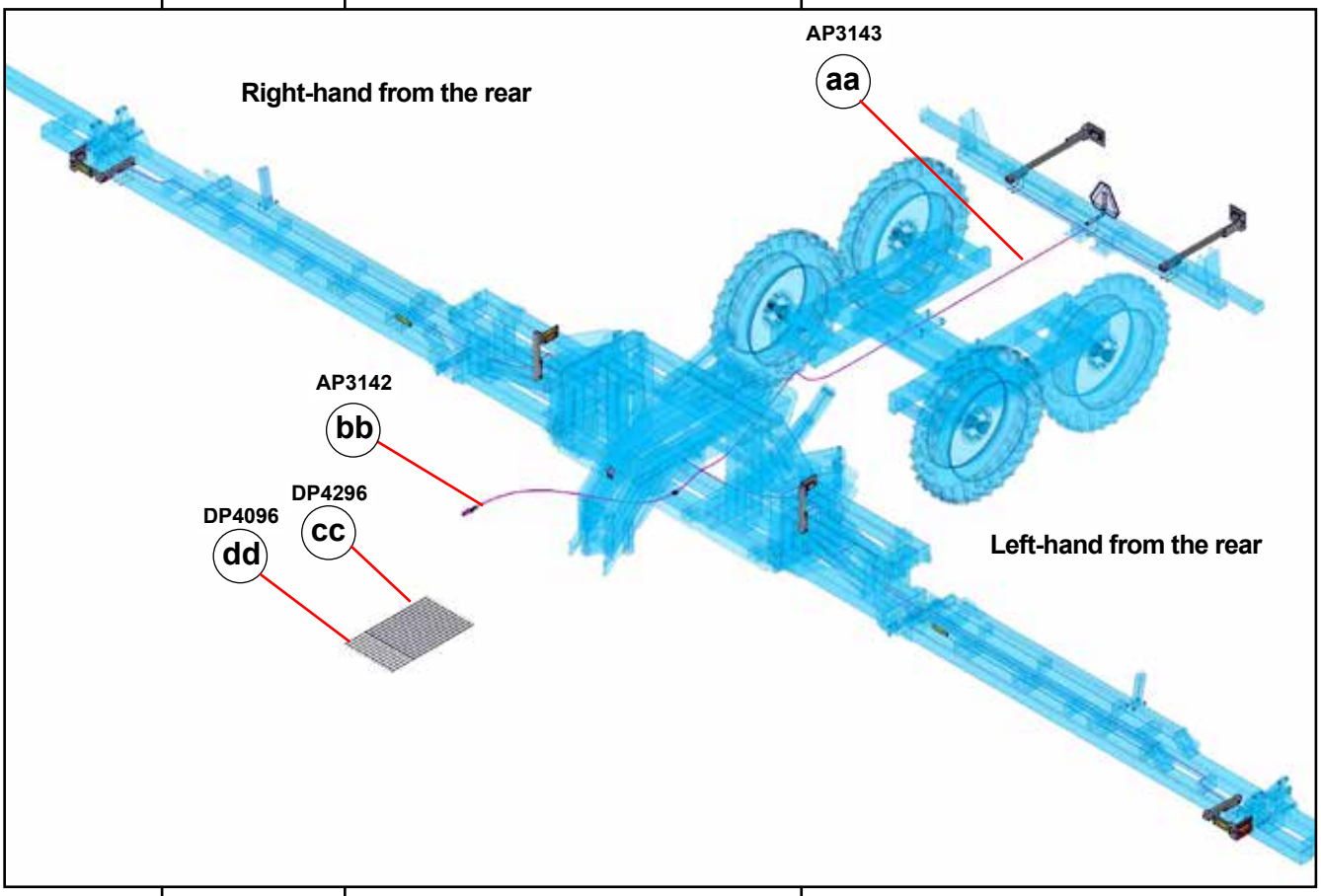

▶ **Light Kit assembly Red lamp connectors**

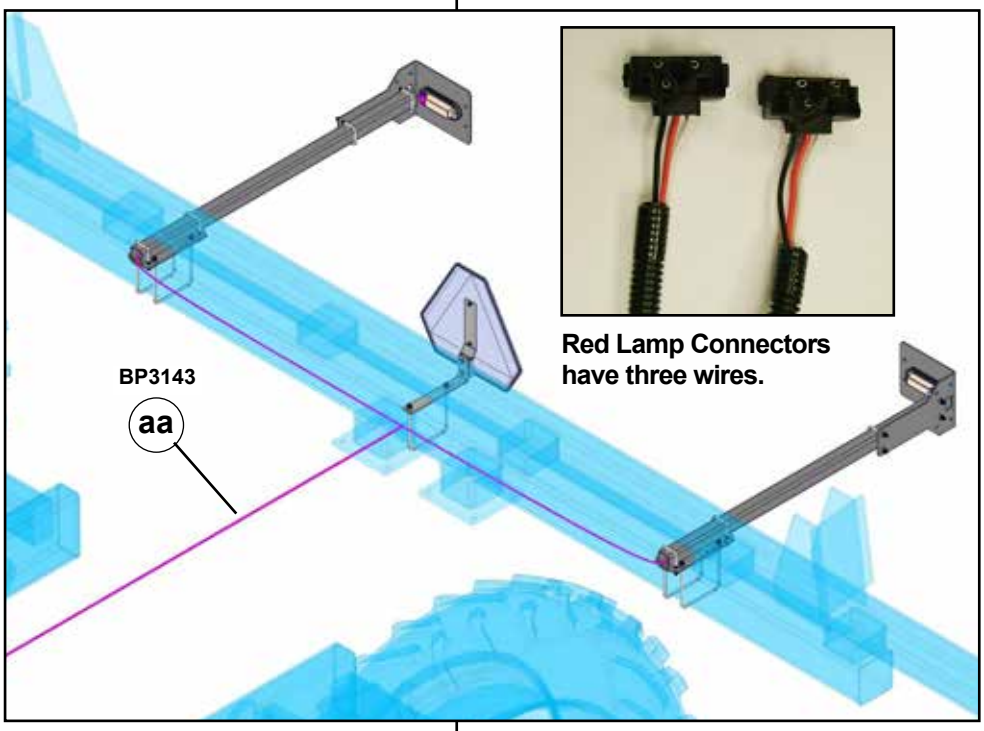

Task	Procedures	Illustrations

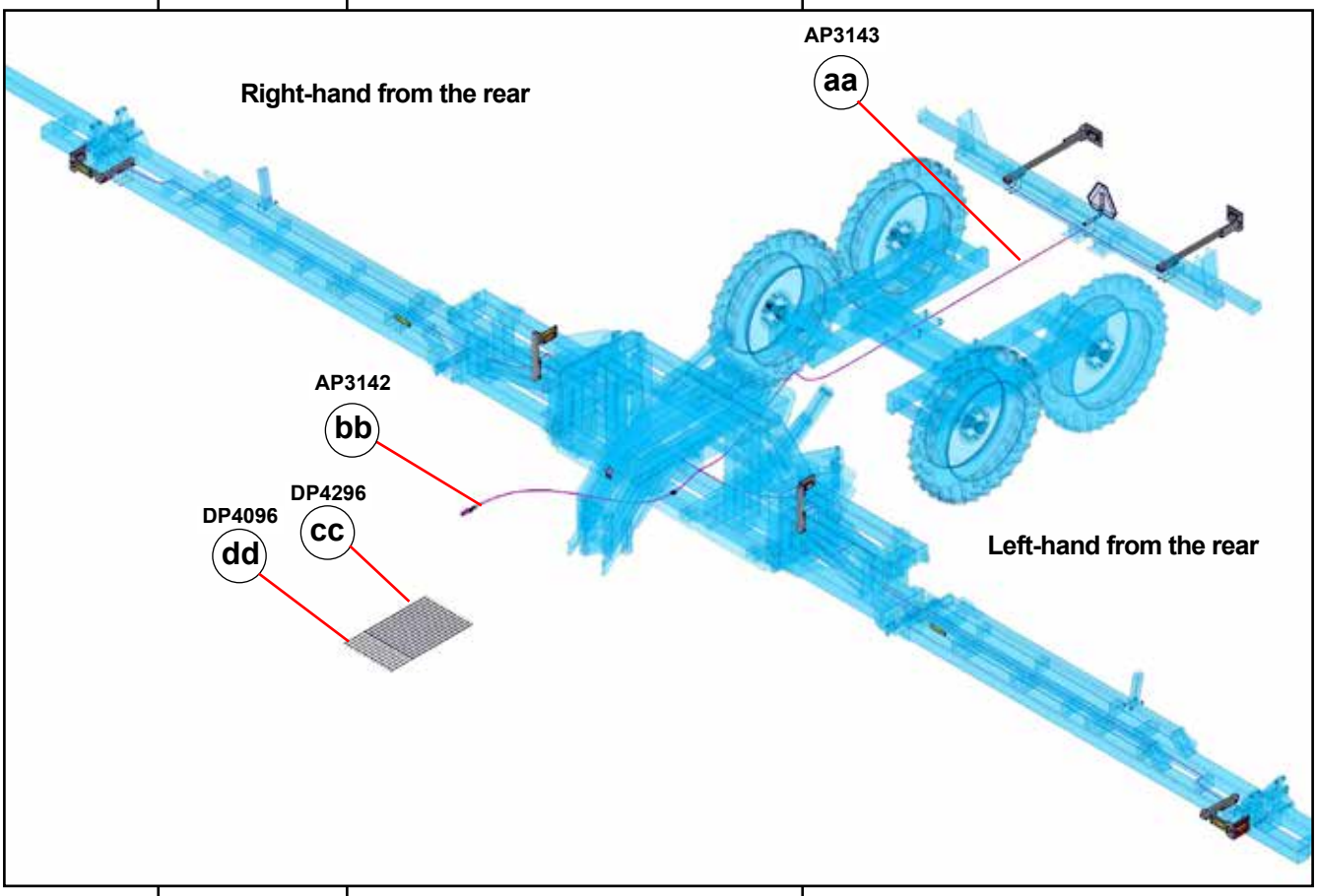

▶ **Light Kit assembly Amber lamp connectors left-hand**

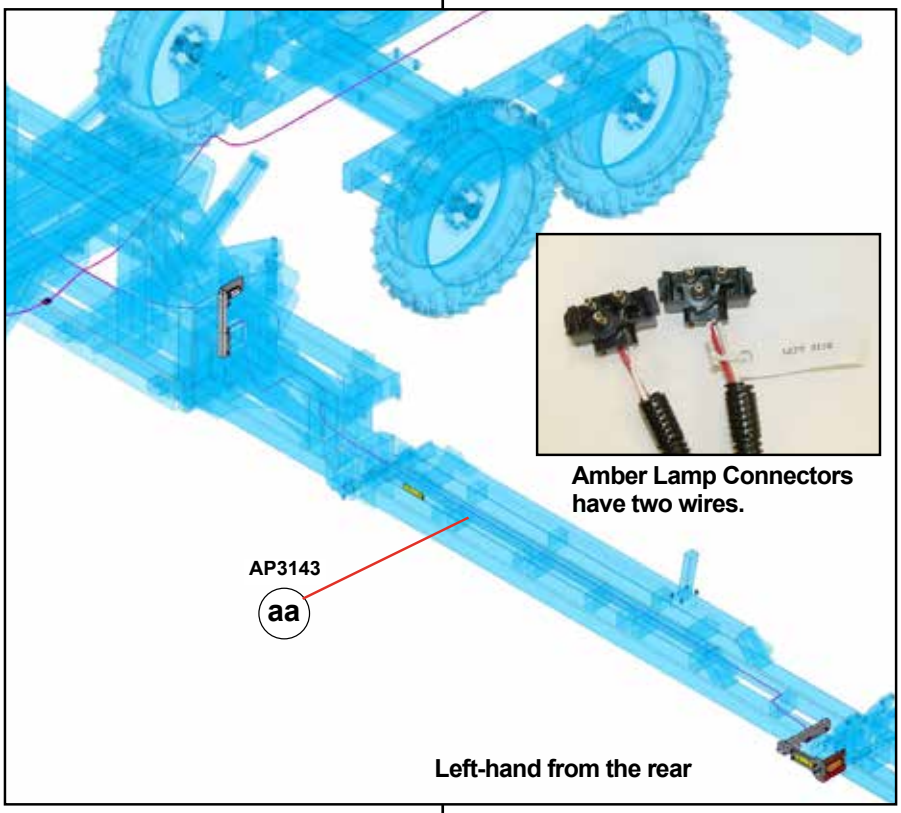

Task	Procedures	Illustrations

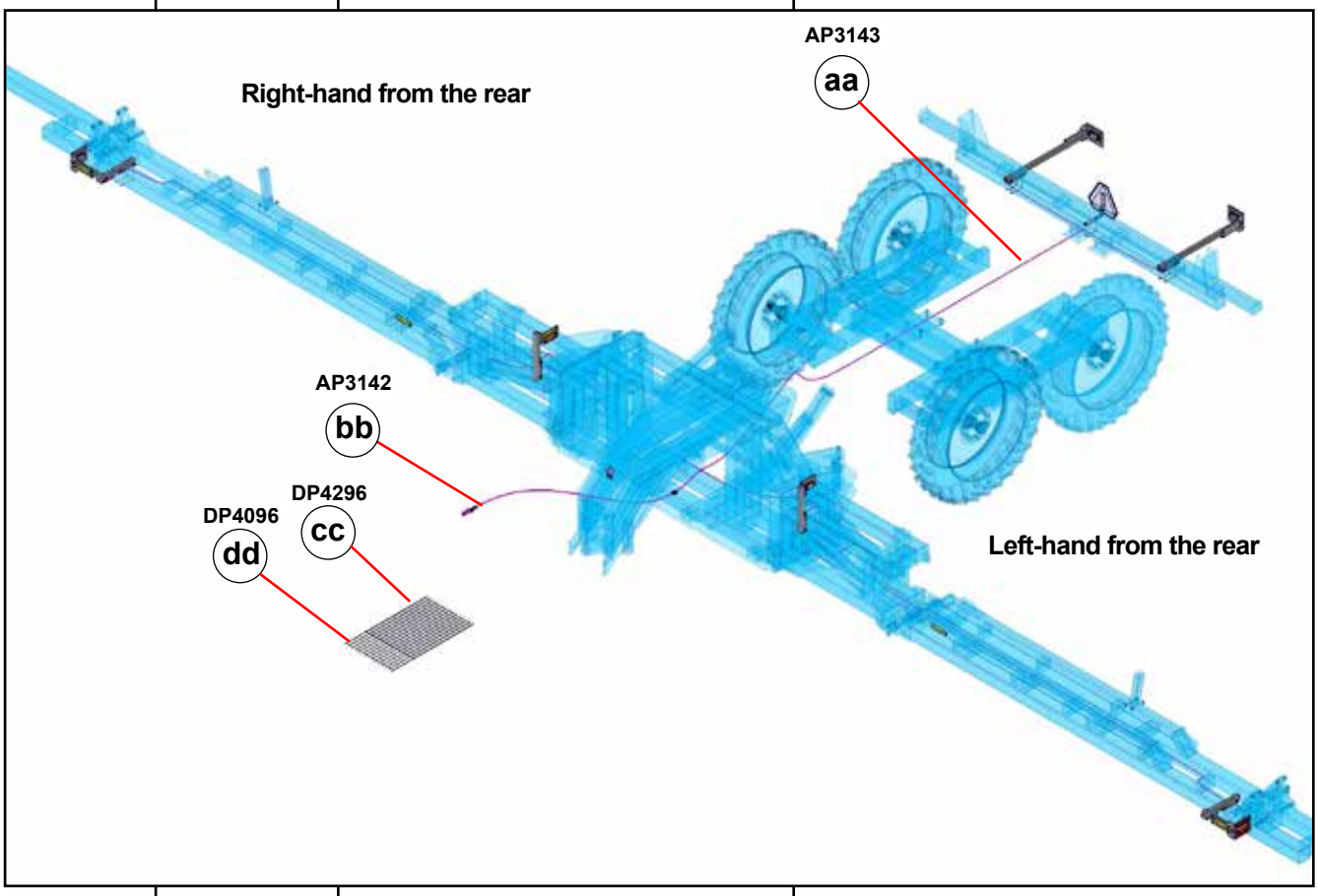

▶ **Light Kit assembly Amber lamp connectors right-hand**

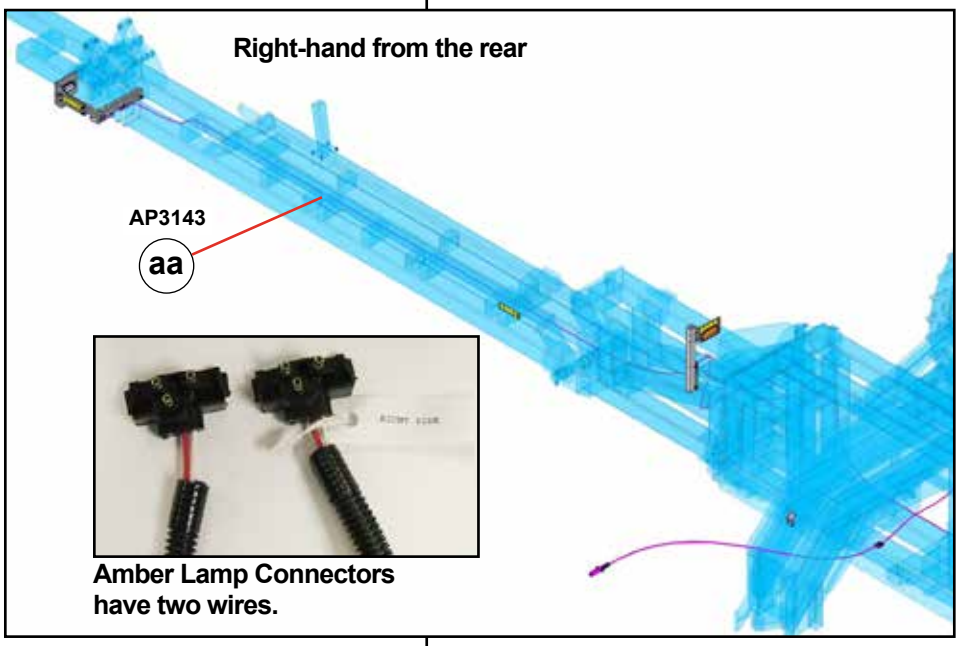

Amber Lamp Connectors have two wires.

1. Secure electrical harnesses to frame and wings with (dd) (DP4086) 11-3/8” cable ties and (cc) (DP4296) 33” cable ties.

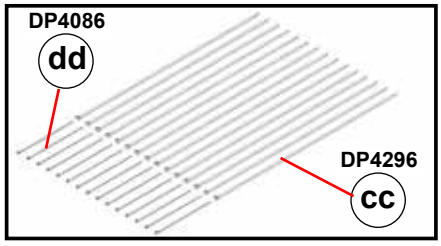

Assembly (SMV)

AT7000	Task	Procedures	Illustrations
►	**SMV mounting**	**1. Attach (a) (AP2542) SMV sign to (b) (AP2544) SMV mounting spade with hardware provided with spade.** ***Note: If spade hardware is missing use (BP3233) 1/4" x 3/4" hex cap screws and (BP3053) 1/4" hex nuts to mount SMV sign.*** **2. Mount (c) (AM4077) SMV mounting bracket to mainframe with (d) (BP3351) 3/8" x 6"W x 7"L, u-bolt, Secure with (e) (BP3564) 3/8" keps nuts.** **3. Mount (f) (AP2543) SMV mounting socket with hardware provided with spade.** **4. Insert SMV Assembly in spade.**	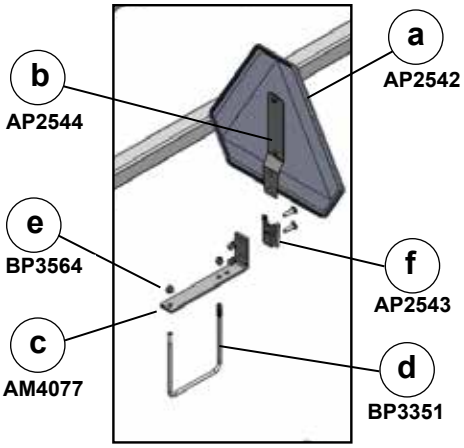 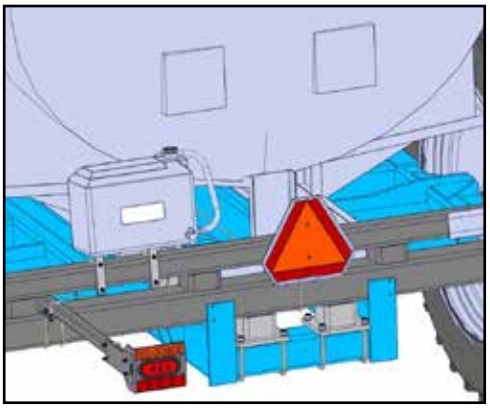

AAM2427 Safety Tank, Toolbox

Ref.	Part No.	Req.	Description
1.	AP2215	1	Decal, BLU-JET, 3” x 8”
2.	BP3351	2	U-bolt, 3/8”-16 x 6” x 7”

PKG00040 Package 9 Gallon Safety Tank Mount

Ref.	Part No.	Req.	Description
a.	AM2136	2	Bracket, tank, mounting 9 gallon
b.	AP2137	1	Tank, 9 gallon, fresh water safety
c.	BP3001	4	Nut, hex, 3/8”-16, grade 2, plated
d.	BP3002	4	Washer, lock, 3/8”, plated
e.	BP3108	6	Hex cap screw, 5/16”-18 x 1”, grade 5, plated
f.	BP3158	6	Washer, lock, 5/16”, plated
g.	BP3159	6	Washer, flat, 5/16”, plated

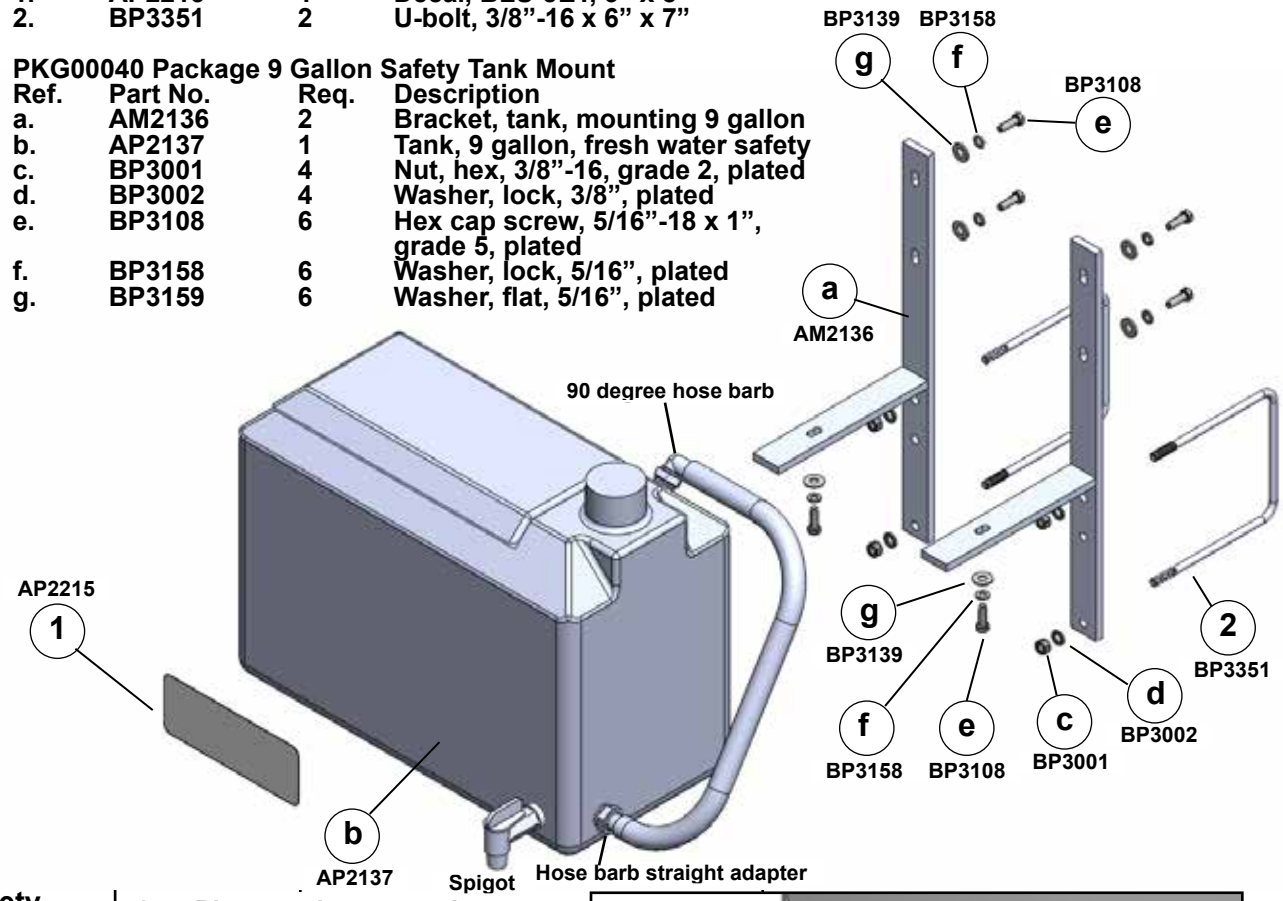

► **Safety Tank mounting**

1. Place sealant on tank spigot and install in the front of the tank.
   Place sealant on threads of hose barb straight adapter and hose barb 90 degree.
   Install 90 degree hose bar in top port. Install straight hose barb adapter in bottom port.
   Place hose clamp on clear hose and attach to bottom tank hose barb.
   Extend hose and push on on 90 degree hose barb.

   The top hose barb does not require a clamp.

2. Attach two (a) (AM2136) 9 gallon tank mounting brackets to (b) (AP2137) 9 gallon fresh water safety tank with six (g) (BP3159) 5/16” flat washers, (f) (BP3158) 5/16” lock washers and (e) (BP3108) 5/16” x 1” hex cap screws.

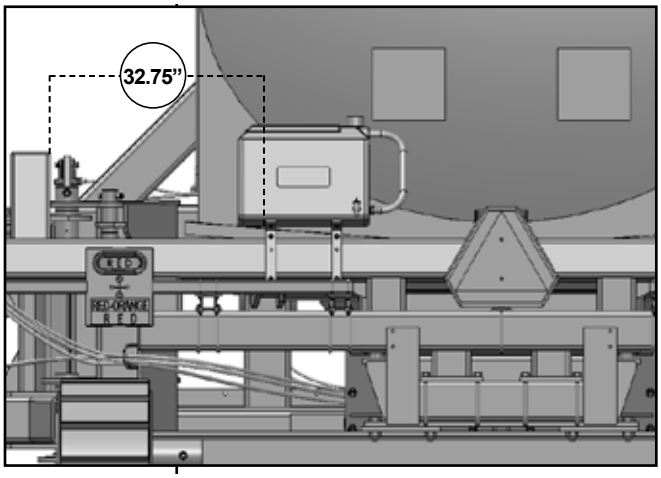

3. Mount safety tank assembly 32.75” from the side of the wing stop to side of bracket.
   Insert (2) (BP3351) 3/8” x 6” x 7” u-bolts.
   Secure with (d) (BP3002) 3/8” lock washers and (c) (BP3001) 3/8” hex nuts.

4. Place (1) (AP2215) 3” x 5” BLU-JET decal on tank.

Coulter Assembly

AT7000	Task	Procedures	Illustrations
▶	**Preparing coulters for mounting**	**1. Remove hex cap screws from hub (a) (AM2799) coulter arm with hub and knee casting assembly.**	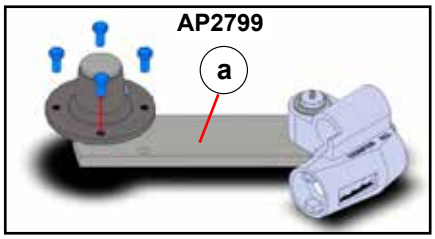
		2. Place (AP2840) 20" smooth coulter blade on coulter assembly and replace hex cap screws.	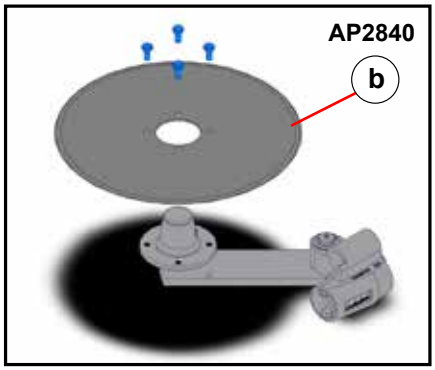
		3. Install (c) (BP3466) 2-1/2" OD x 1-3/4" ID, 10 GA, 18-8 SS machinery bushing over (d) (AM4424) 23" coulter shank weldment. **4. Insert the 23" coulter shank into coulter assembly. Start (e) (BP3519) 3/8" x 2-1/2" roll pin in base of coulter shank. Insert the (f) (BP3534) 7/32" x 2/1/2" roll pin in the end of the 3/8" roll pin and drive both pins together. Leave an equal amount of pin on each sides of the shank.**	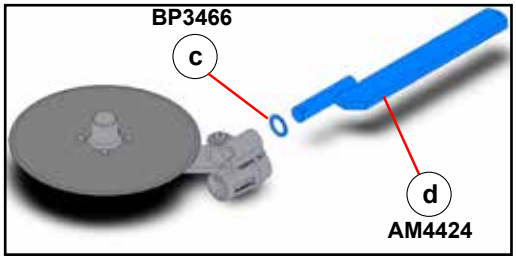 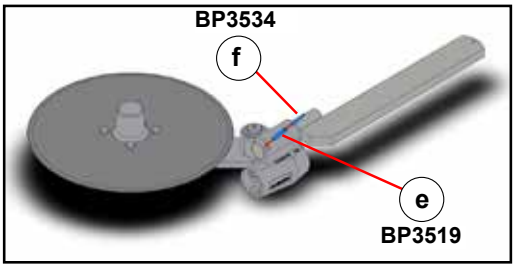
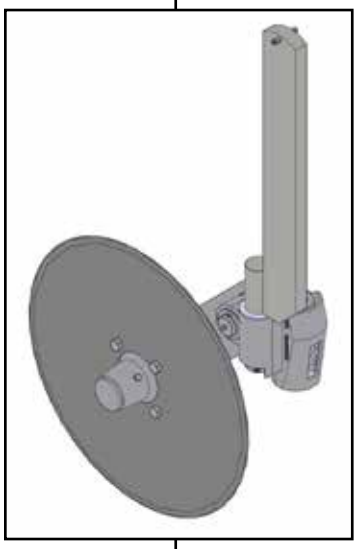		**5. Install the (g) (BP3162) 3/8" x 2" roll pin through the shank weldment top hole.** **AAM2728** **Super 1200 coulter 1 row (Blade not part of bundle.)**	**Installing roll pin in shank** 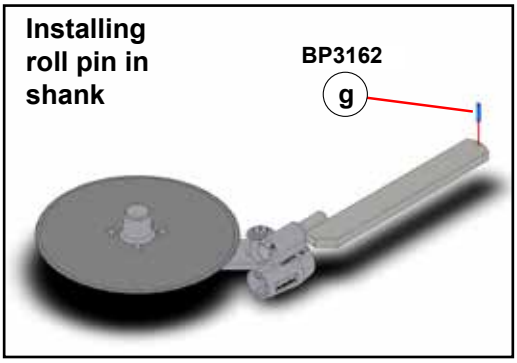

Assembly (Flatbacks)

AT7000	Task	Procedures	Illustrations
▶	**Mountig Flatbacks Wings**	**1. Level wings with center section and mark out row spacings from center.**	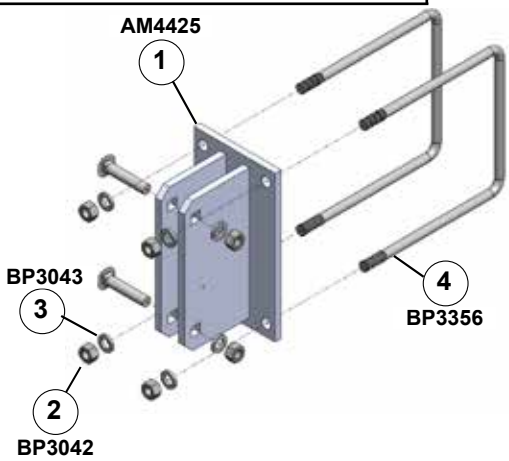
▶	**NOTE:** ***Consult row spacing pages for measurement***	**2. Install (1) (AM4425) 7" x 7" flatbacks on tractor side of tool bar wings with (4) (BP3356) 1/2" x 7" x 8/1/4" u-bolts. Secure with (3) (BP3043) 1/2" lock washers and (2) (BP3042) 1/2" hex nuts.** 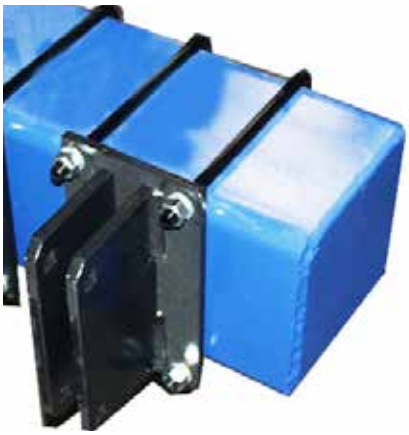	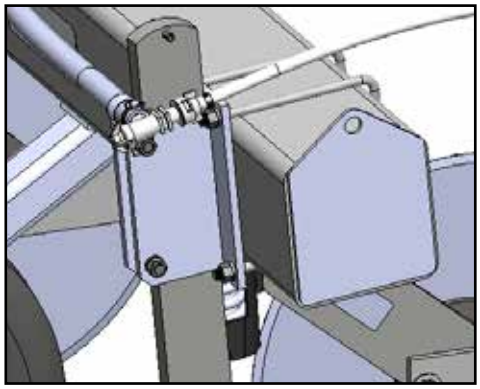
▶	**Mountig Flatbacks Center Section**	**3. Mount (1) (AM4425) 7" x 7" flat backs to center section with four (2) (BP3041) 1/2" x 2" hex cap screws, (4) (BP3043) 1/2" lock washers and (3) (BP3042) 1/2" hex nuts.** **4. Place (a) (AM3628) liquid trunk line mounting bracket over the inside top (2) (BP3041) 1/2" x 2" hex cap screws before inserting into flatback.** *The hinge area flatbacks only.*	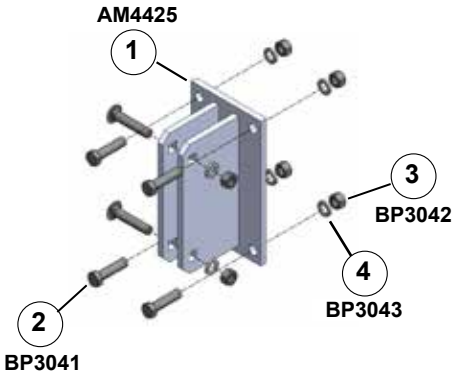

5. Place (a) (AM3628) liquid trunk line mounting bracket over the outside top (2) (BP3041) 1/2" x 2" hex cap screws before inserting into flatbacks.

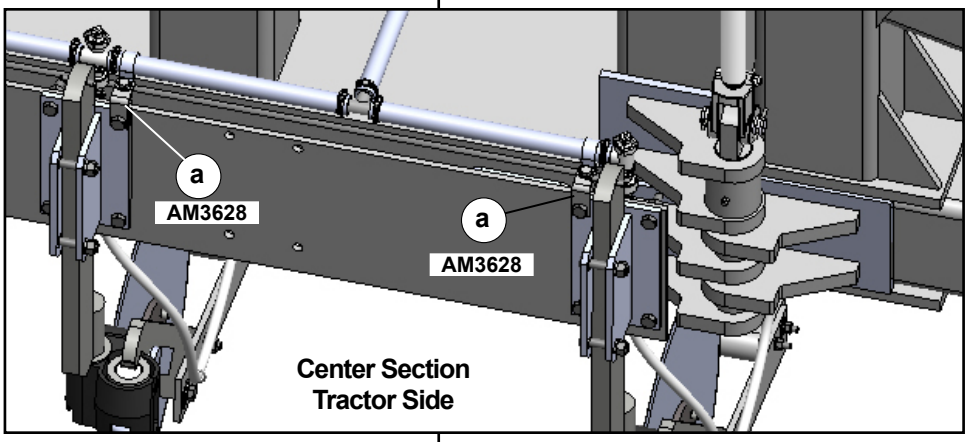

Assembly (Coulter Mounting)

AT7000	Task	Procedures	Illustrations
►	**Mountig flatbacks wings**	**1. Insert coulter shank into the mounting and allow assembly to rest on shank roll pin.**	

2. Insert the (a) (BP3229) 1/2"-13 x 2-1/2" carriage bolt into top hole of bracket. Push coulter shank assembly back into the bracket and insert the bottom carriage bolt. Place (b) (BP3043) 1/2" lock washer and (c) (BP3042) 1/2"-13 hex nut on each carriage bolt. Do not tighten at this point.

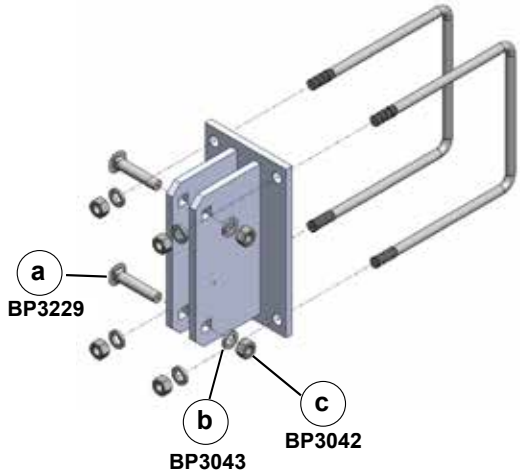

3. Raise coulter shank assembly in bracket and place a 3" spacer between the roll pin and the top of the bracket.

4. Tighten the 1/2" hex nuts. This height is a starting point.

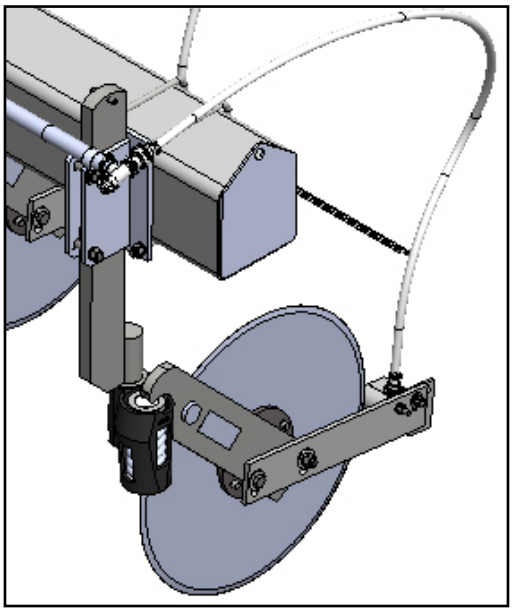

Assembly (Gauge Wheel Set Mounting)

AT7000	Task	Procedures	Illustrations
▶	Gauge wheel mounting	1. Place (a) (AM3626) gauge wheel mounting on rear side of third wing. Consult Row Spacing pages for proper position.	
▶	**NOTE:** Right-hand and left-hand as viewed from the rear Tire Pressure 35 lbs. P.S.I. Max.	2. Attach mounting with (b) (BP3356) 1/2" x 7"W x 8-1/4"L u-bolts, (c) (BP 3043) 1/2" lock washers and (d) (BP3042) 1/2" hex nuts. 3. Place (h) (AM3546) left-hand or (i) (AM3548) right-hand gauge wheel assembly against (a) (AM 3626) gauge wheel mounting. Insert (e) (BP3300) 5/8" x 2-1/2" x 4" u-bolts into mounting plate and place (f) (BP3039) 5/8" lock washers and (g) (BP3038) 5/8" hex nuts on u-bolts. Extend assembly up 10" and tighten 5/8" hex nuts. *Gauge wheels will require adjustment in the field.*	

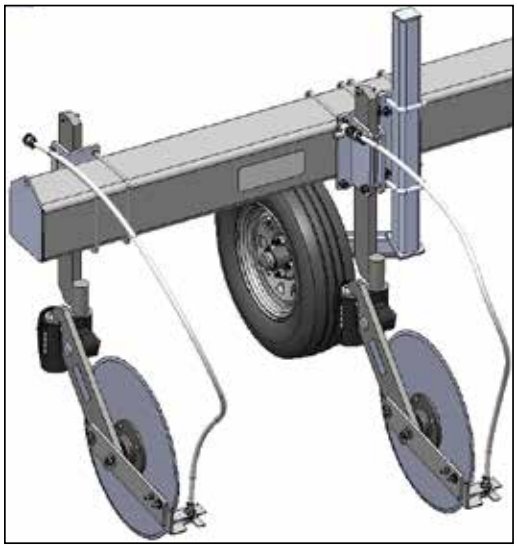

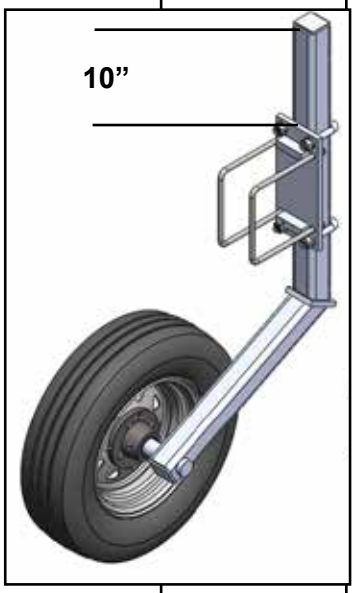

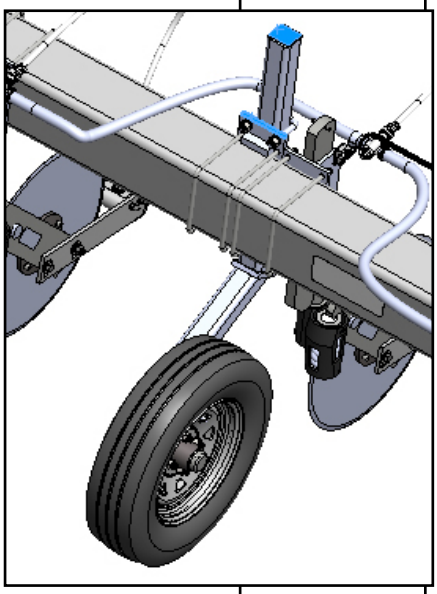

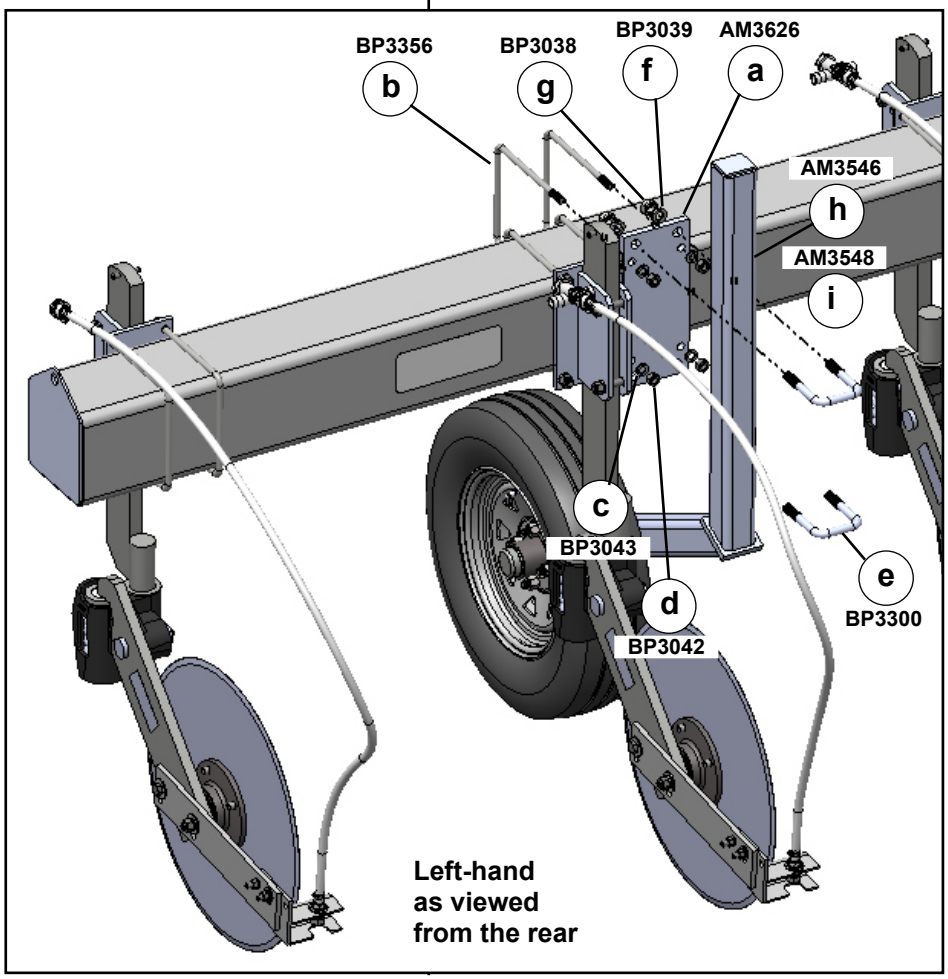

Vertical Pin Adjust Single Gauge Wheel

AT7000	Task	Procedures	Illustrations

► **Bundle Number: 40600103**

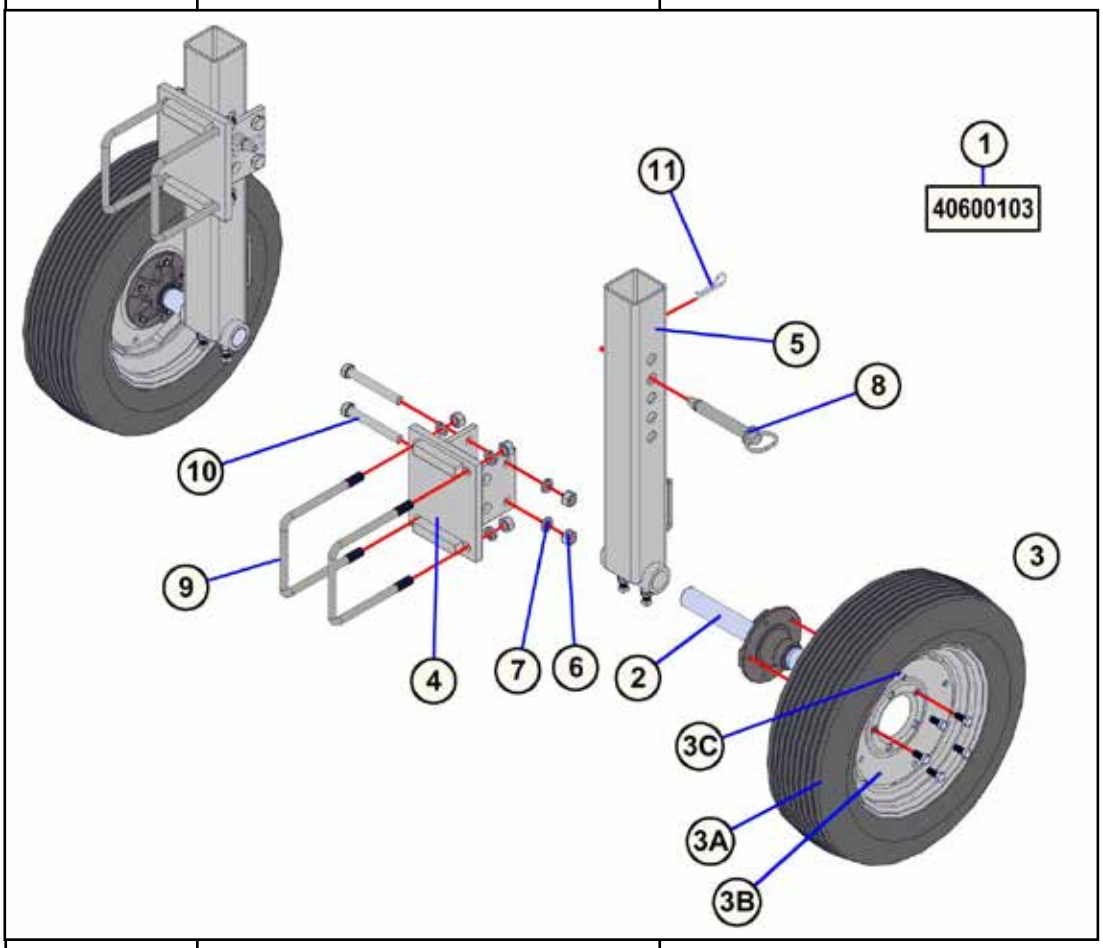

BOM ID	Qty	Item No	Description
1	1	40600103	VERTICAL PIN ADJUST GAUGE WHEEL
2	2	AAM2707	ASSEMBLY, HUB & SPINDLE, 511 HUB, 1-3/4” X 13” SPINDLE
3	2	AAM2758	WHEEL, 25 X 7.50-15, 4 PLY, 15 X 5 X 5, WHITE
3A	2	AP2017	TIRE, 25 X 7.50-15, 6 PLY, TERRA RIB
3B	2	AP2250	RIM, 15 X 5 X 5, WHITE
3C	2	AP2790	VALVE STEM, METAL
4	2	AM7519	BRACKET, GAUGE WHEEL MOUNT
5	2	AM7520	GAUGE WHEEL LEG
6	12	BP3034	NUT, HEX, 3/4”-10, GRADE 2, PLATED
7	12	BP3035	WASHER, LOCK, 3/4”, PLATED
8	2	BP3051	PIN, 1” X 6”, PLATED
9	4	BP3058	U-BOLT, 3/4”-10 X 7”W X 9”L
10	4	BP3146	HEX CAP SCREW, 3/4”-10 X 6”, GRADE 5, PLATED
11	2	BP3500	PIN, HAIR CLIP, 3/16”

Assembly (Vertical Pin Adjust Gauge Wheel Mounting)

AT7000	Task	Procedures	Illustrations

▶ **Gauge wheel mounting**

▶ **NOTE: Right-hand and left-hand as viewed from the rear**

▶ **NOTE: Consult Row Spacing page for proper position of gauge wheels**

Tire Pressure 32 lbs. P.S.I. Max.

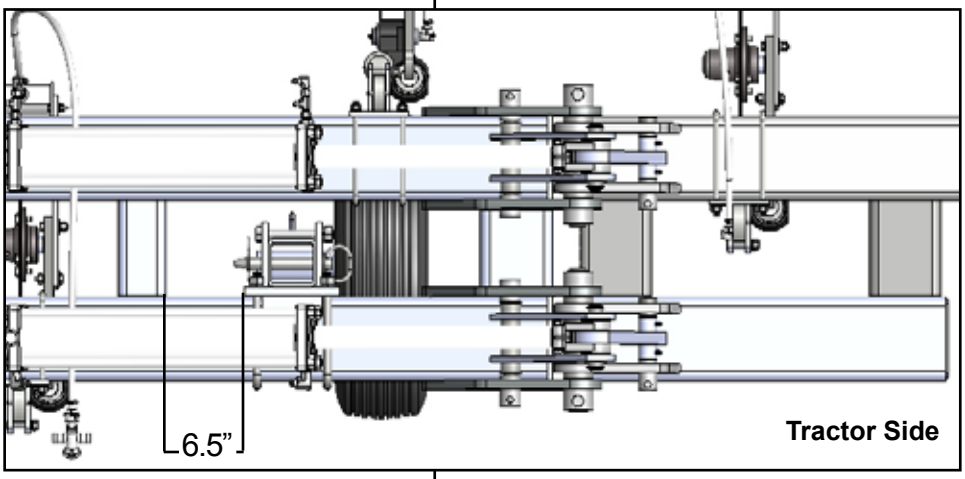

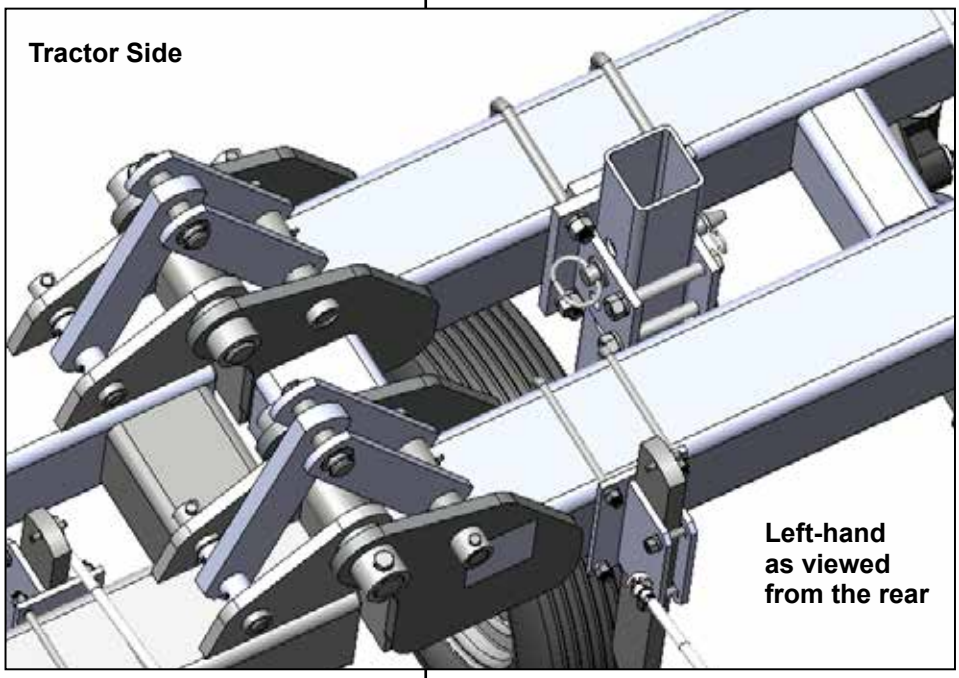

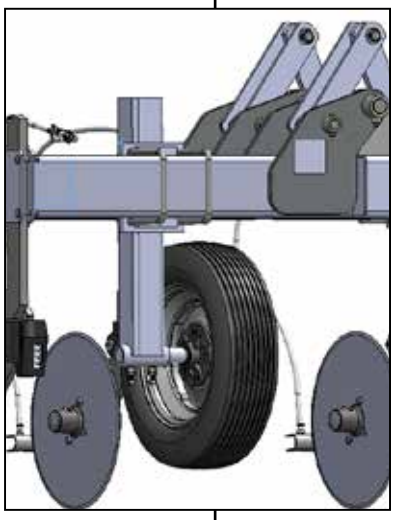

1. Place (4) (AM7519) gauge wheel bracket on front bar 6.5” from the cross member to the side of the plate. Wheel leg arm to the back. Secure with two (9) (BP3058) 3/4”-10 x 7”W x 9”L u-bolts, four (7) (BP3035) 3/4” lock washers and four (6) (BP3034) 3/4” hex nuts.

2. Loosen jam nuts and bolts and insert spindle into wheel leg arm. Spindle end is flush with the end of the tube. Tighten jam bolts and jam nuts.

3. Mount (3) (AAM2758) wheel on (2) (AAM2707) hub and spindle assembly.

4. Insert wheel leg assembly into (4) (AM7519) gauge wheel bracket.
Gauge wheels should run to the outside of the frame.

5. Install (10) (BP3146) two 3/4” x 6” hex cap screws through mounting bracket with two (7) (BP3035) 3/4” lock washers and two (6) (BP3034) 3/4” hex nuts.

6. Raise wheel leg assembly until one hole is exposed and insert (8) (BP3051) 1” x 6” hitch pin. Secure pin with (11) (BP3500) 3/16” hair pin clip.
This is a starting position.

7. After final depth adjustment is decided, tighten 3/4” hex nuts on mounting bracket.

► AAM3353 JETSTREAM LIQUID ASSEMBLY, TEE-JET CHECK, 1 ROW

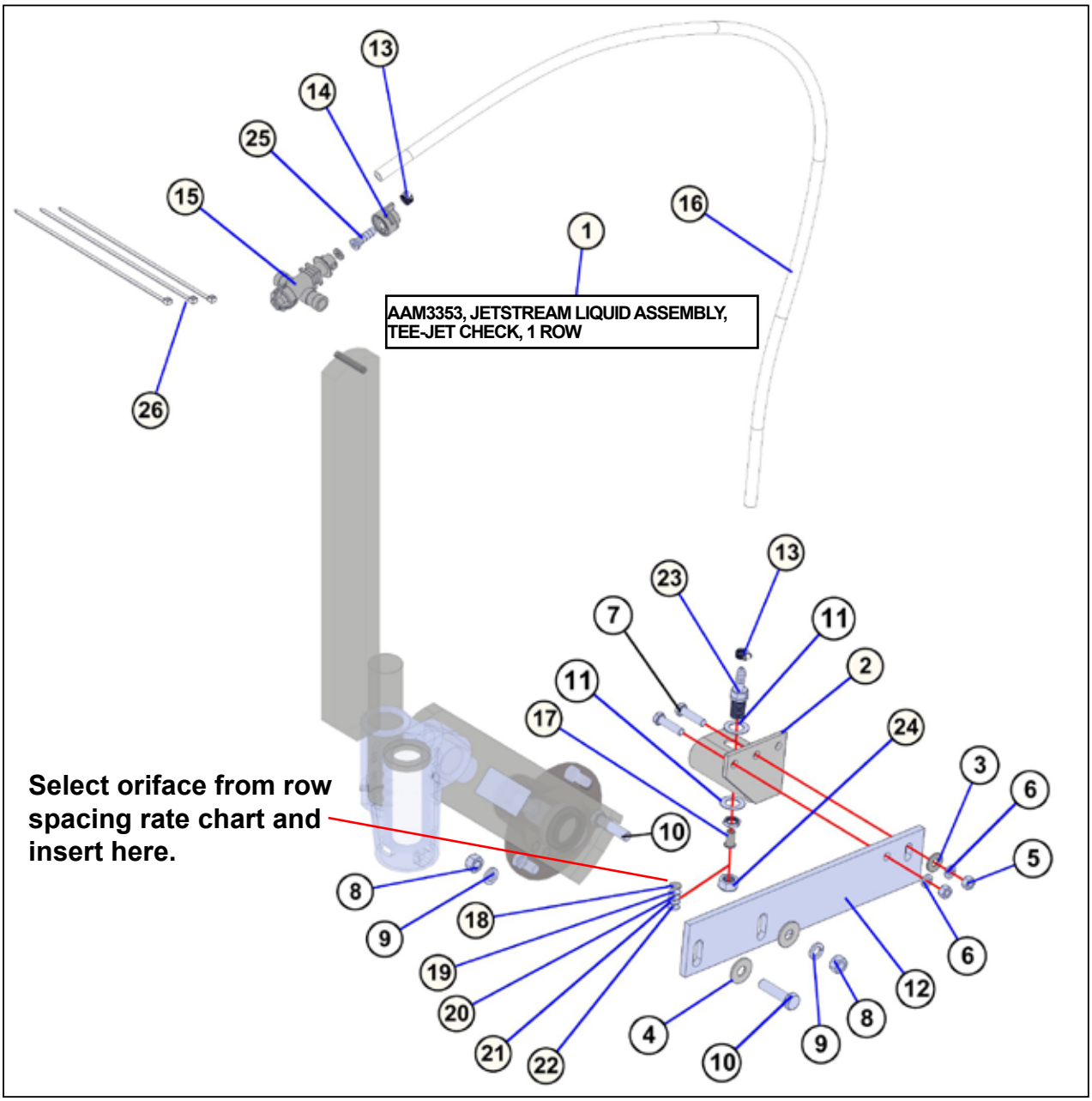

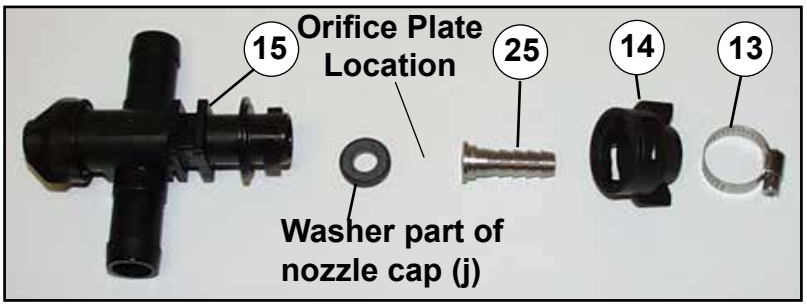

Assembly (Liquid Injection)

AT7000	Task	Procedures	Illustrations
▶	**Clear liquid injection parts**	**1. JetStream Clear Liquid injection (AAM3353)**	

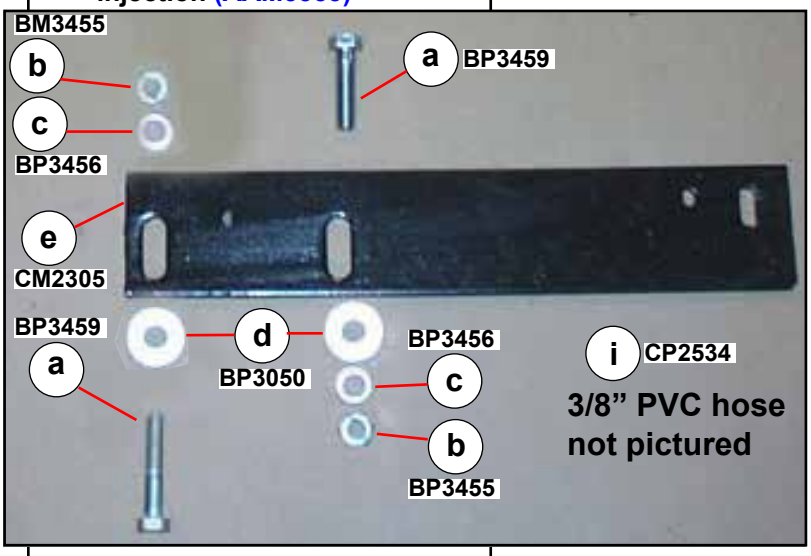

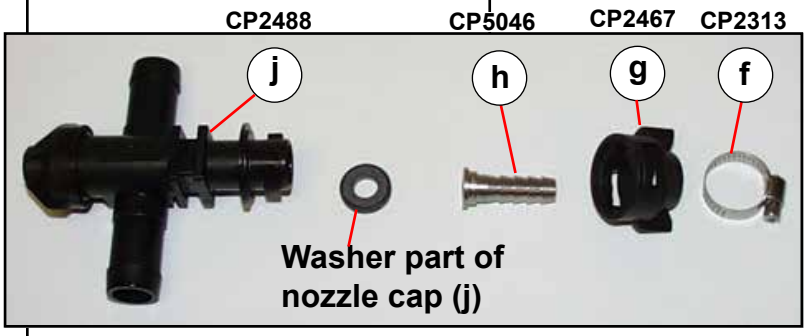

a.	BP3459	2	Hex cap screw, 1/2”-13, x 2”, F593 GR 1 CW
b.	BP3455	2	Nut, hex, 1/2”-13, F594 GR 1 CW
c.	BP3456	2	Washer, Lock, 1/2”, 18-8 SS
d.	BP3050	2	Washer, flat, 1/2”, Plated
e.	CM2305	1	Jet Stream mounting arm
f.	CP2313	2	Stainless steel hose clamp 5/8”-1”
g.	CP2467	1	Nozzle cap, 25608-1-NYR
h.	CP5046	1	Hose barb insert, 3/8” hose Stainless Steel
i.	CP2534	5	3/8” PVC 250# PSI hose Jet Stream
j.	CP2488	1	Diaphragm check valve, double shank 3/4” hose
k.	DP4086	3	Cable Tie 11-3/8” standard (Not pictured)

▶ **Attaching injection mounting brackets**

2. Place (e) (CM2305) Jet Stream mounting arm on coulter arm. Place (d) (BP3050) 1/2” flat washer on (a) (BP3459) 1/2” x 2” hex cap screw into coulter arm slotted hole through mounting arm. Place (c) (BP3456) 1/2” lock washer and (b) (BP3455) 1/2” hex nut on hex cap screw next to blade.

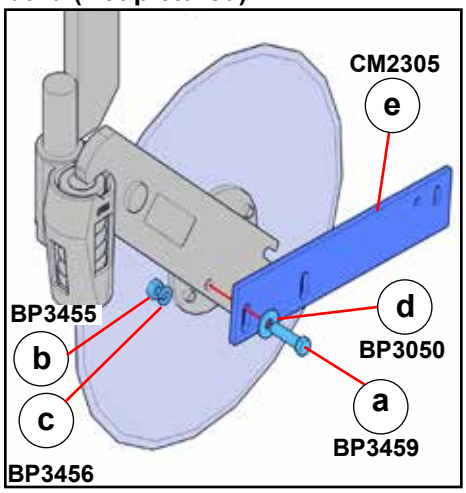

Toolbar Assembly (Liquid Injection)

AT7000	Task	Procedures	Illustrations
▶	**Attaching injection mounting brackets**	**1. Raise mounting arm and insert (a) (BP3459) 1/2" x 2" hex cap screw blade side into coulter arm slotted hole through mounting arm. Place (d) (BP3050) 1/2" flat washer, (c) (BP3456) 1/2" lock washer on hex cap screw. Raise mounting arm and secure with (b) (BP3455) 1/2" hex nut.**	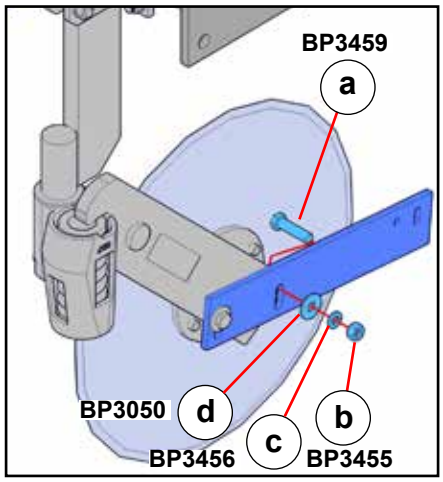
▶	**Nozzle assembly parts**	**2. Nozzle Assembly** **a. CP2313 1 Stainless steel hose clamp 5/8"-1"** **b. CP2578 1 Straight nozzle body with/nut, 3/8" hose, SS** **c. CP2537 1 Stream stabilizer -SS** **d. Orifice plate:** **CP2541 1 #4916-63** **CP2542 1 #4916-70** **CP2543 1 #4916-78** **CP2544 1 #4916-86** **CP2545 1 #4916-95** **f. CP2589 1 Nozzle cap, SS**	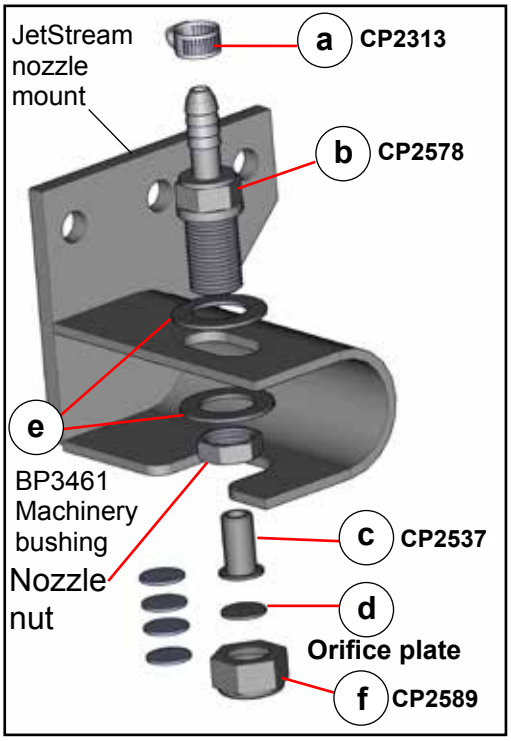
▶	**Nozzle body assembly**	**3. Place JetStream nozzle mount in vise. Insert (b) (CP2578) straight nozzle body into (e) (BP3461) 5/8", 1-1/2" OD, 0.78, 18-8 SS, flat washer. Insert into nozzle mount. Place second (e) (BP3461) 5/8", 1-1/2" OD, 0.78, 18-8 SS, flat washer over threads of nozzle assembly, center assembly on slotted hole and secure with nozzle nut.** ***Nozzle assembly should be aligned with blade after coulter assembly is complete.***	
▶	**NOTE:** ***Consult rate chart for orifice size***	**4. Place orifice plate (d) into (f) (CP2589) nozzle cap. Insert (c) (CP2537) stream stabilizer-SS into nozzle cap. Install assembly into nozzle body.**	

Tool Bar Assembly (Liquid Injection)

AT7000	Task	Procedures	Illustrations

Jet Stream mounting bracket parts

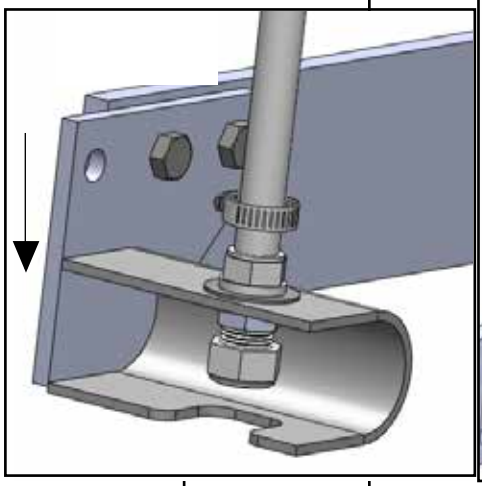

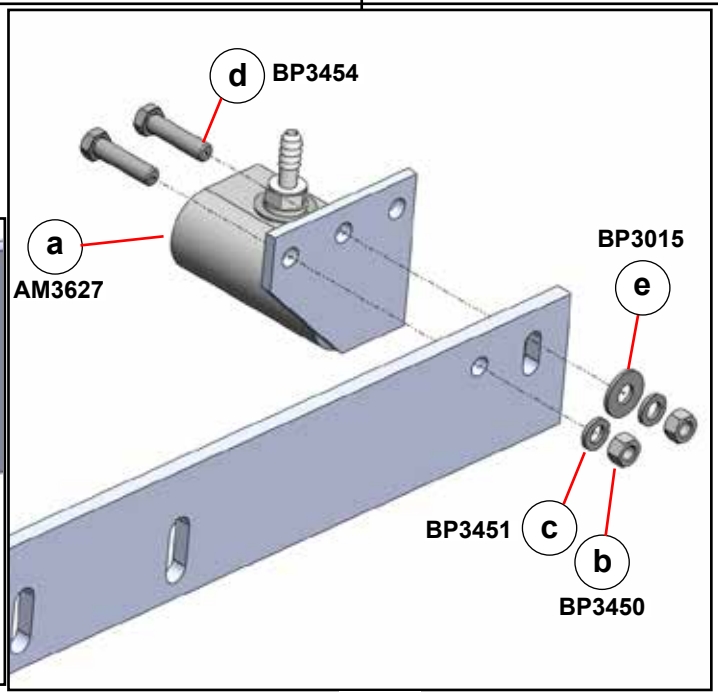

NOTE: *Rotate rear of nozzle mount down before securing*

1. | | | | |
|---|---|---|---|
| a. | AM3627 | 1 | Nozzle mount, JetStream |
| b. | BP3450 | 2 | Nut, Hex, 3/8”-16, F594 GR 1 CW |
| c. | BP3451 | 2 | Washer, Lock, 3/8”, 18-8 SS |
| d. | BP3454 | 2 | 3/8”-16 x 1-1/2” hex cap screw, F593 GR 1 CW |
| e. | BP3015 | 1 | Washer, flat, 3/8”, Plated |

2. Mount (a) (AM3627) JetStream nozzle mount to JetStream mounting arm with two (d) (BP3454) 3/8” x 1-1/2” hex cap screws, F594 GR 1 CW.
Secure each hex cap screws with (e) (BP3015) 3/8” flat washers, (c) (BP3451) 3/8” lock washers, 18-8 SS and (b) (BP3450)3/8” hex nuts, F594 GR 1 CW.

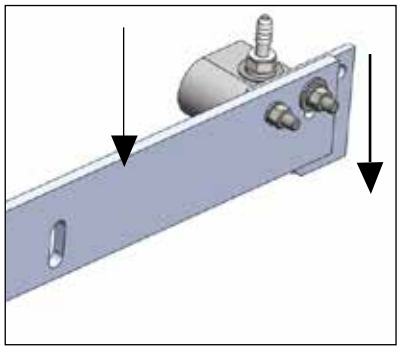

Attaching PVC hose to assembly

3. Push assembly down. Secure with (e) (BP3015) 3/8” flat washers, (c) (BP3451) 3/8” lock washers 18-8 SS and (b) (BP3450) 3/8”-16 hex nuts F594 GR 1 CW.

4. Cut lengths from bulk (CP2534) 3/8” PVC 250# psi hose <u>as needed</u>. Push hose over hose barb and secure with (CP2313)

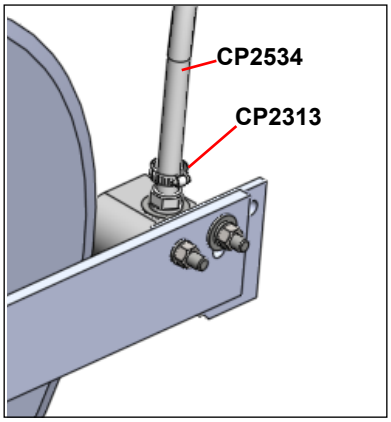

Assembly (JetStream Injection)

AT7000	Task	Procedures	Illustrations
►	**Attaching hose support clamps**	**1. Remove 1/2" hex nut and lock washer from top carriage bolt of each flatback. Install (a) (AM3628) liquid trunk line mounting bracket over carriage bolt. Replace 1/2" lock and hex nut.**	
►	**NOTE:** ***Hose clamps can be installed as 3/4" hose is installed***	**2. Attach (b) (AP3809) 1-1/4" hose support clamp to (a) with (c) (BP3453) 3/8" x 1" hex cap screw, (d) (BP3451) 3/8" lock washer and (e) (BP3450) 3/8" hex nut.** *Do not tighten until 3/4" suction hose is installed.*	

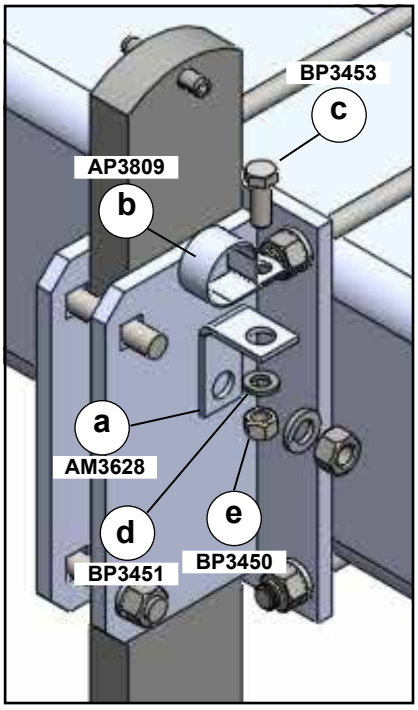

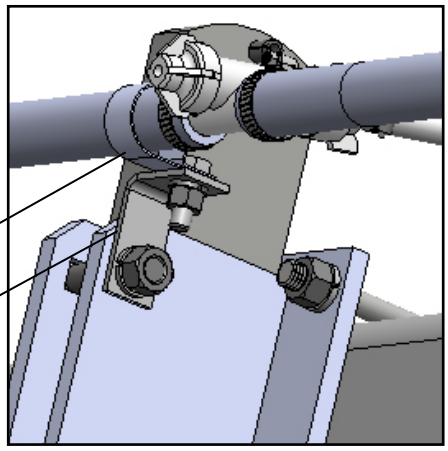

Wing liquid trunk line mounting bracket and hose support clamp.

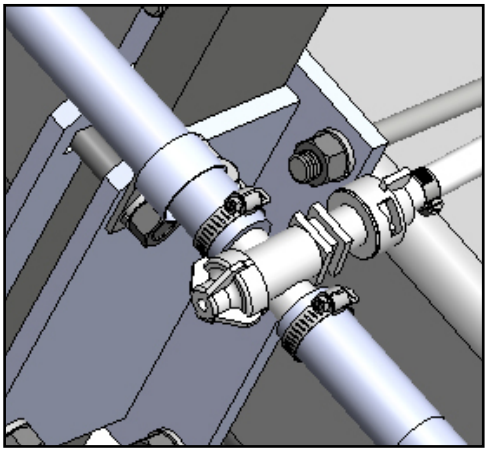

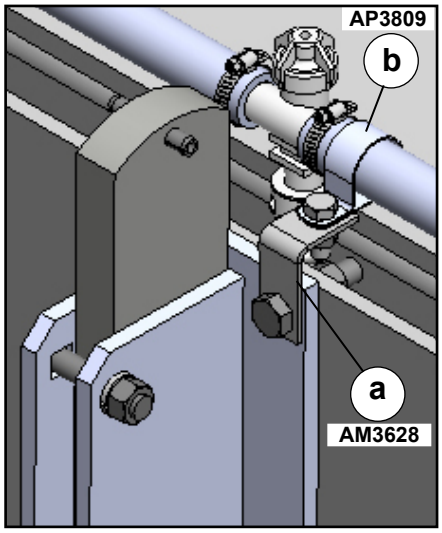

Center Section liquid trunk line mounting bracket and hose support clamp.

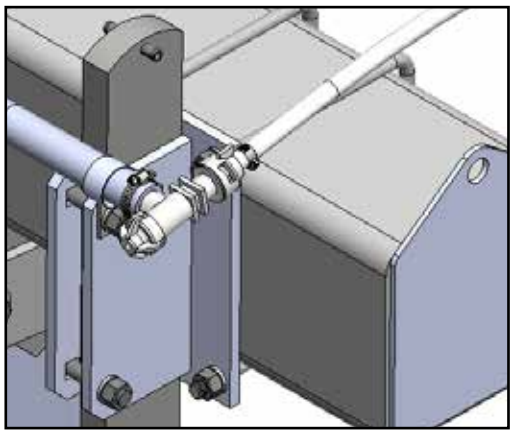

Single diaphragm check valve mounted. End of wing.

Assembly (JetStream Injection)

AT7000	Task	Procedures	Illustrations
►	**Diaphragm check valves**	**1. (c) (CP2488) diaphragm check valve, double shank 3/4" hose assembled.** **a. CP2313 1 Hose clamp, worm gear, 1/4" -5/8" tubing SS** **b. CP2314 2 Hose clamp, worm gear, 1/2" -1" tubing, SS**	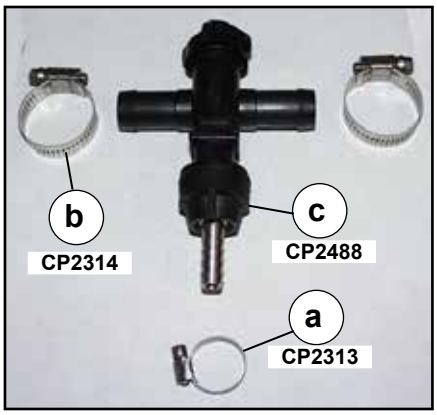
►	**Last row diaphragm check valves**	**2. Attach diaphragm check valves double to (d) (CP2534) 3/8" PVC 250# psi hose with (a) (CP2313) worm gear hose clamp 1/4"-5/8" on each row accept the the last row.**	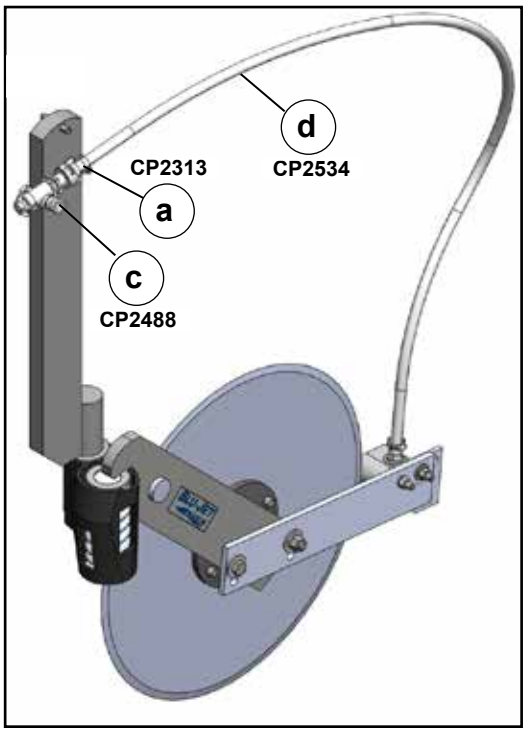
►	**NOTE:** *Center section rows*	**Center Section Rows Only** **3. Remove (e) (BP3041) 1/2" x 2" and place (f) (AM7230) spring hook under flat washer and secure 1/2" x 2" hex cap screw.** **4. Extend (d) through spring hook before installing the double and single diaphragms. on the center section row only.**	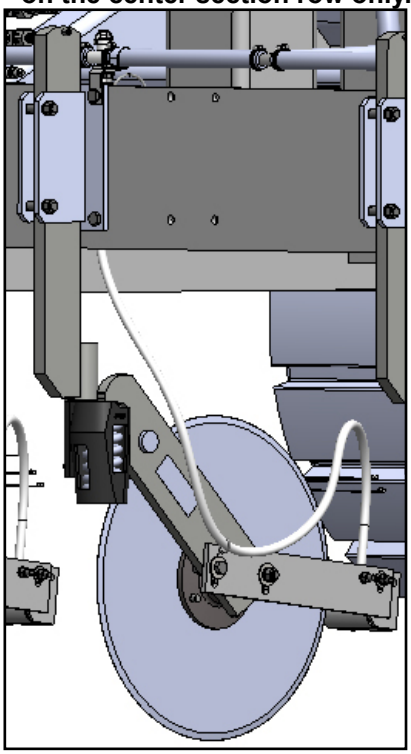 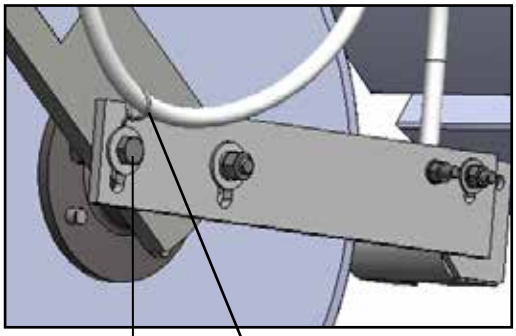

Assembly (JetStream Injection)

AT7000	Task	Procedures	Illustrations
►	**Last row diaphragm check valves**	**1. (d) (CP2487) diaphragm check valve, single shank 3/4" hose assembled.** **a. CP2313 1 Hose clamp, worm gear, 1/4" -5/8" tubing SS** **b. CP2314 1 Hose clamp, worm gear, 1/2" -1" tubing, SS**	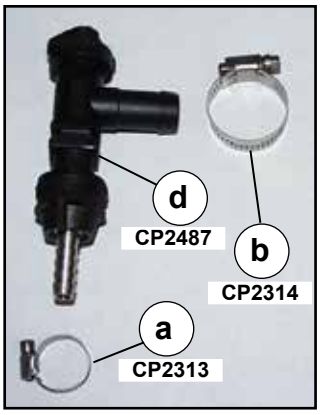

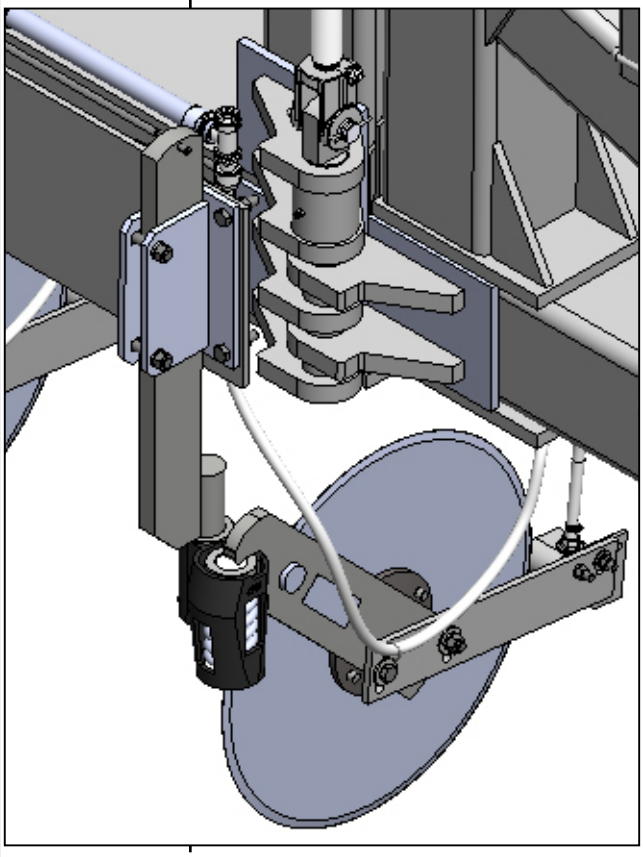

Single diaphragm check valve mounted. End of center section.

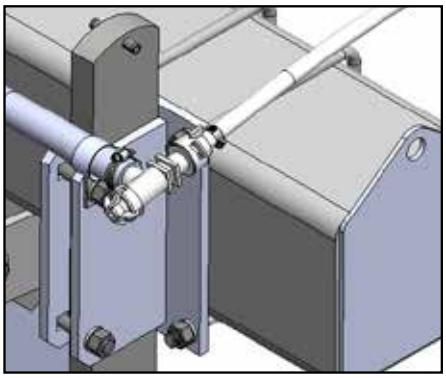

Single diaphragm check valve mounted. End of wing.

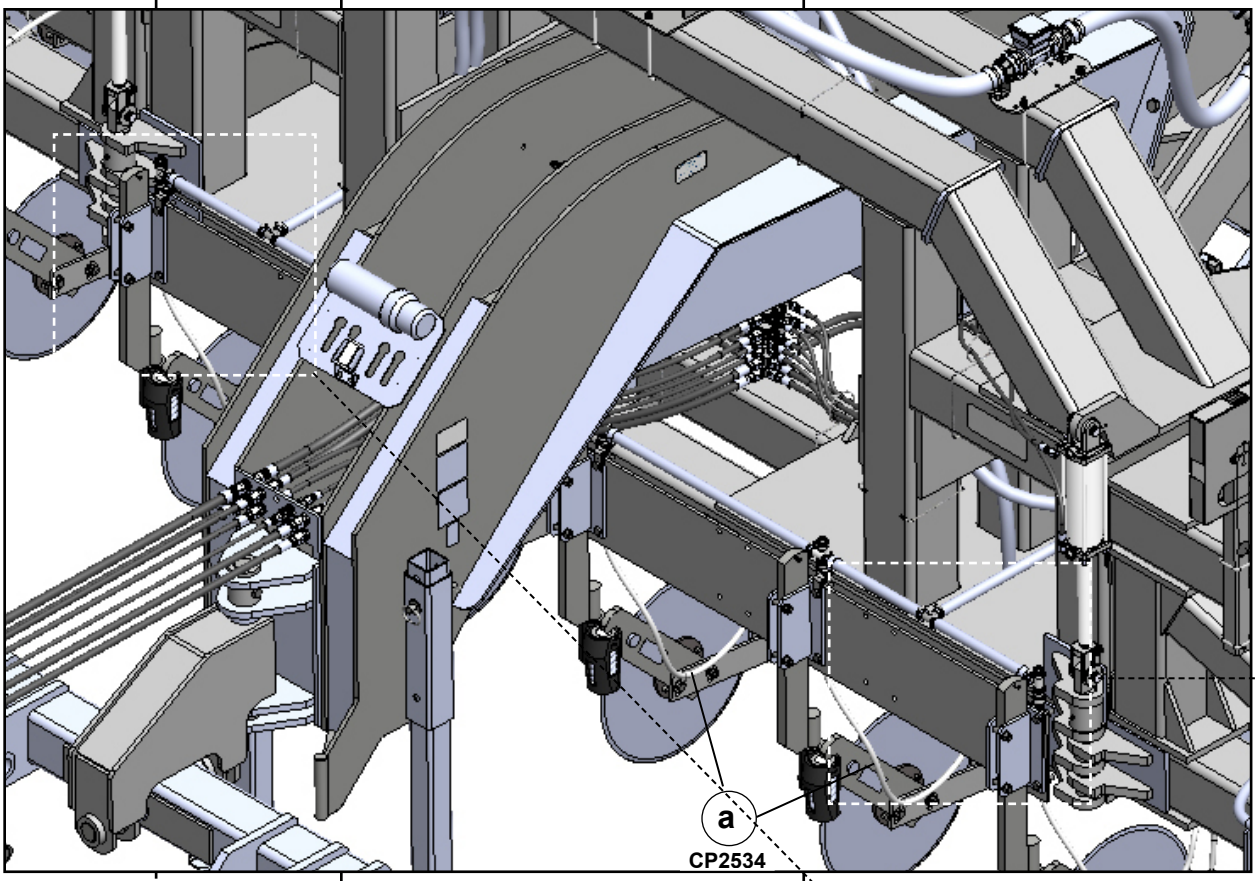

► **Installation 3/4" suction hose center section**

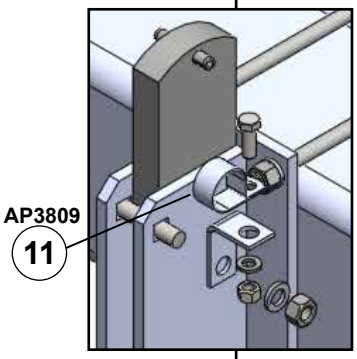

1. **Extend (a) (CP2534) 3/8" EVA hose between the front two plates.**
2. **Extend (62) (CP2472) 3/4" rubber suction hose to through (11) (AP3809) support clamp and place (56) (CP2314) 1/2" - 1" worm gear hose clamp over 3/4" suction hose. Push hose over (63) (CP2487) diaphragm check valve, single hose barb end. Tighten (56) (CP2314) 1/2" - 1" worm gear hose clamp.**
3. **Tighten support clamp to secure hose.**
4. **Pull (62) (CP2472) 3/4" rubber suction hose tight to next row.**
5. **Cut 3/4" suction hose. Place (56) (CP2314) 1/2" - 1" worm gear hose clamps over both ends of the 3/4" hose. Insert (d) (CP2488) diaphragm check valve, double shank 3/4" hose into each end of the 3/4" suction hose. Secure with (56) worm gear hose clamps.** *(d) Part of Jet Stream coulter assembly)*
6. **Install (11) (AP3809) support clamp over hose and secure.**
7. **Repeat step (4) for each single and double diaphragm rows.**

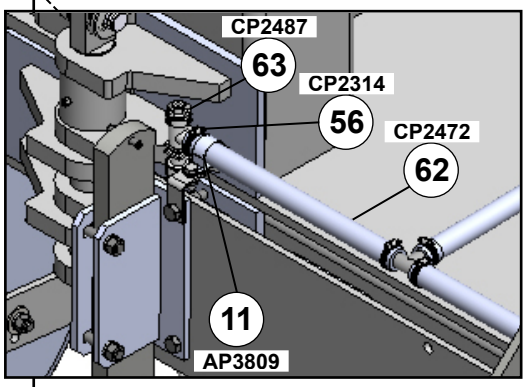

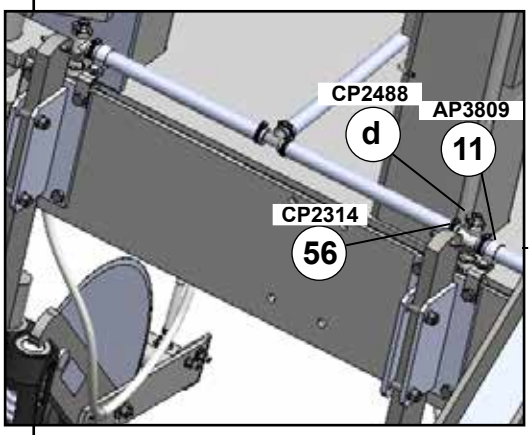

Assembly (Manifold and Suction Hoses Center Section)

AT7000	Task	Procedures	Illustrations

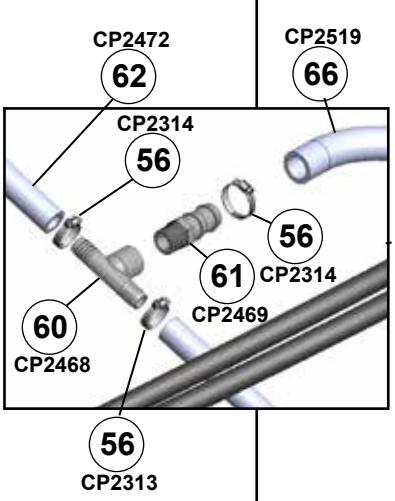

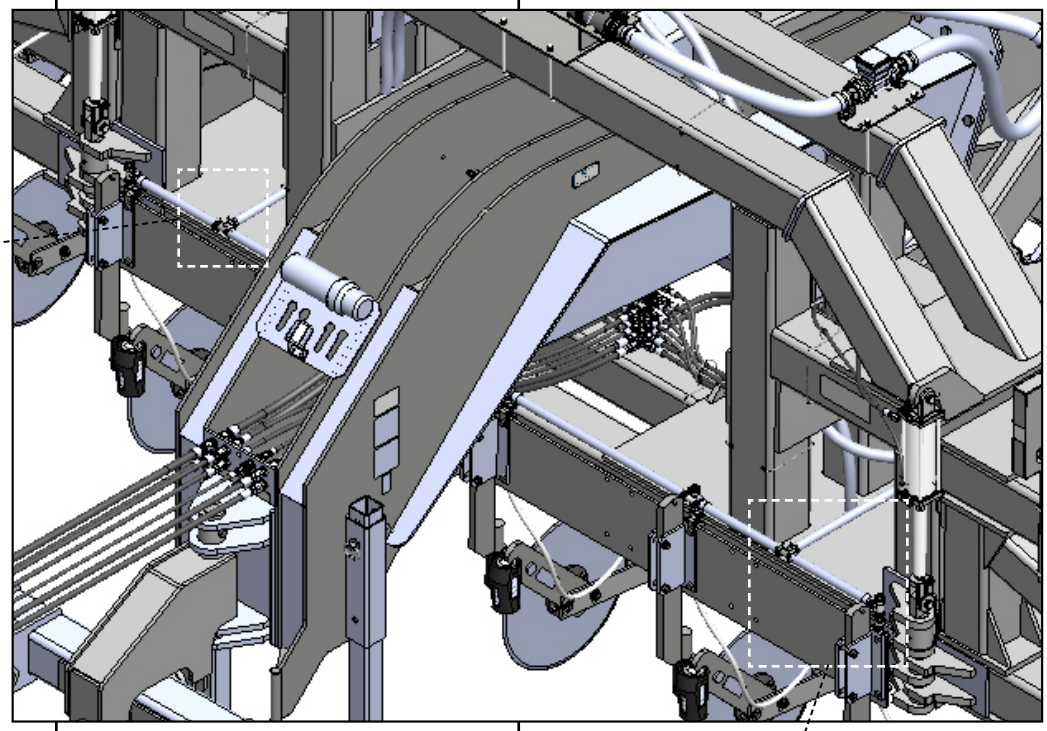

► **Installation 3/4" suction hose center section**

► **NOTE:** Right-hand and left-hand as viewed from the rear

1. Between the last two rows right-hand side from the rear, install (60) (CP2468) 3/4" FB-3/4"HB-3/4"HB ploy tee and secure with (56) (CP2314) 1/2" - 1" worm gear hose clamps.
2. Place sealant on thread end of (61) (CP2469) 3/4"MP x 1"HB hose barb, ploy and install in (60) (CP2468) 3/4"FB-3/4"HB-3/4"HB ploy tee.
3. Between the last two rows left-hand side from the rear, install (59) (CP2461) 3/4"HB -3/4"HB-3/4"HB ploy tee. Secure with (56) (CP2314) 1/2" - 1" worm gear hose clamps.
4. Secure 3/4" suction hose to rows (a) (AP3809) 1-1/4" hose support clamp with (81) (DP4086) 11-3/8" cable ties.

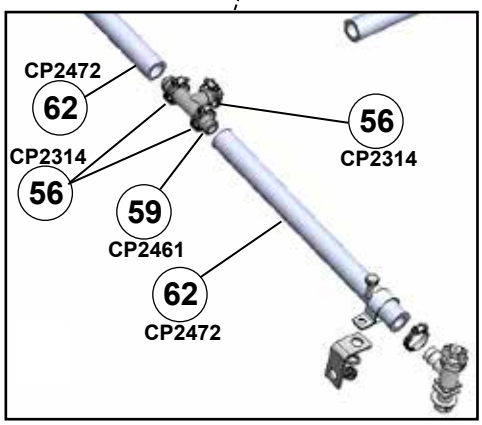

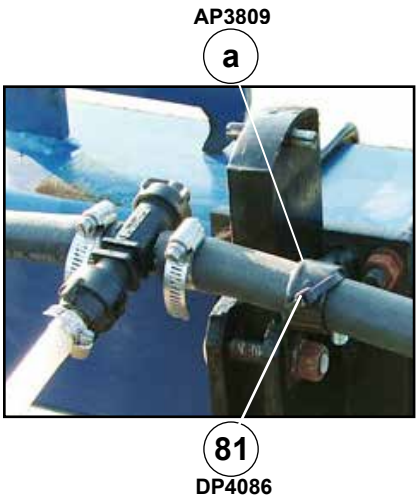

Assembly (Manifold and Suction Hoses Primary Wing)

AT7000	Task	Procedures	Illustrations

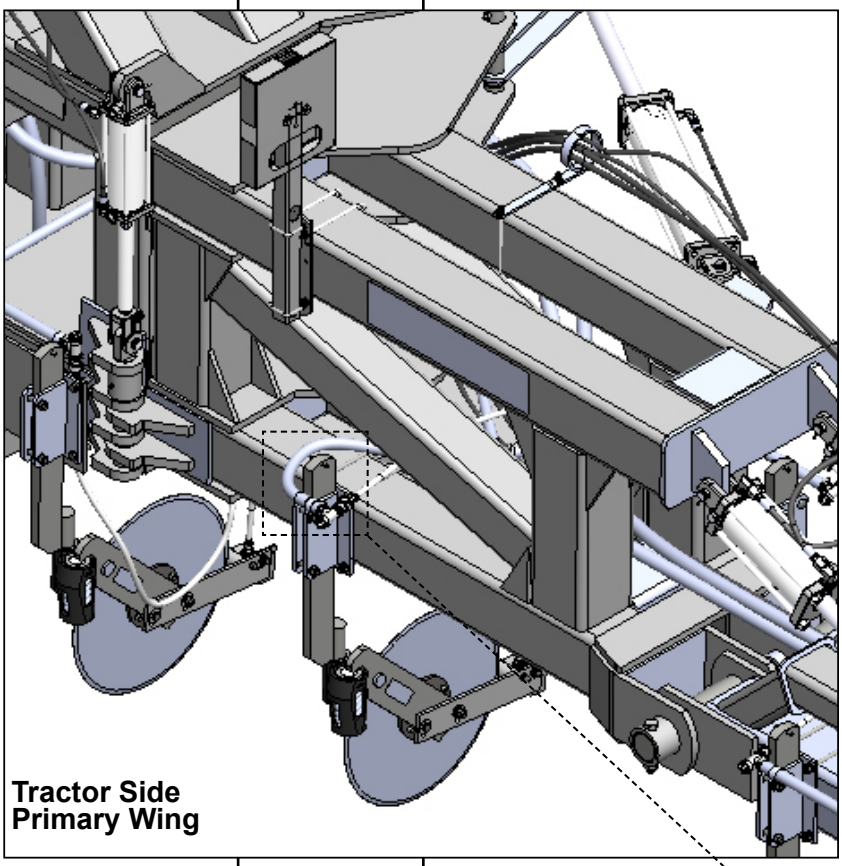

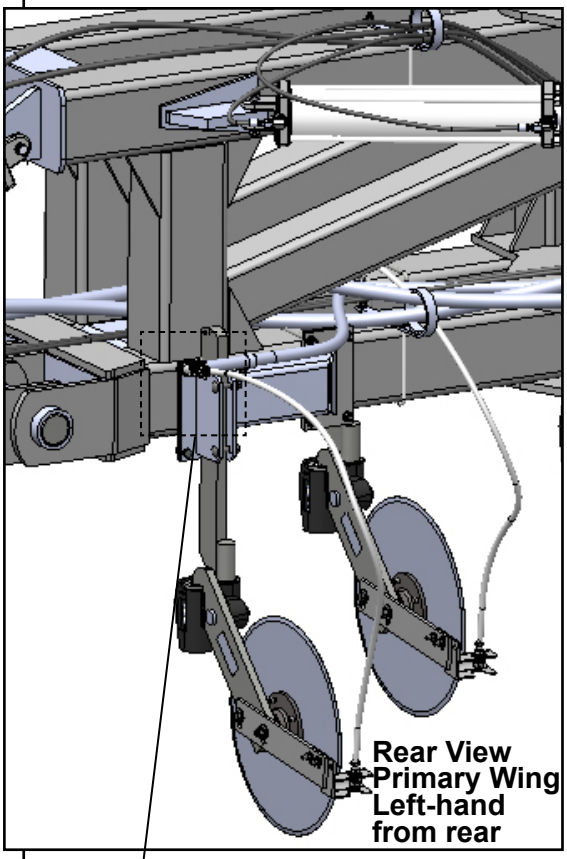

► **Installation 3/4” suction hose primary wing**

1. **Insert (62) (CP2472) 3/4” rubber suction hose to through (11) (AP3809) support clamp and place (56) (CP2314) 1/2” - 1” worm gear hose clamp over 3/4” suction hose. Push hose over (63) (CP2487) diaphragm check valve, single hose barb end.**
   Tighten (56) (CP2314) 1/2” - 1” worm gear hose clamp.

2. **Extend 3/4” suction hose to rear row. Place (56) (CP2314) 1/2” - 1” worm gear hose clamp over 3/4” suction hose Insert (62) (CP2472) 3/4” rubber suction hose to through (11) (AP3809) support clamp and. Push hose over (63) (CP2487) diaphragm check valve, single hose barb end.**
   Tighten (56) (CP2314) 1/2” - 1” worm gear hose clamp.

3. **Between the rows install (59) (CP2461) 3/4”HB-3/4”HB-3/4”HB ploy tee.**
   Secure with (56) (CP2314) 1/2” - 1” worm gear hose clamps.

4. **Repeat steps on right-hand side.**

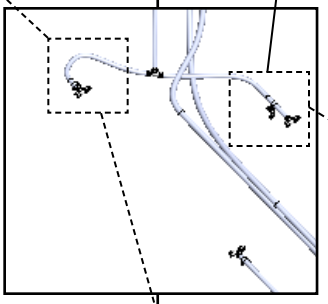

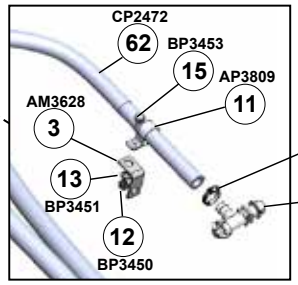

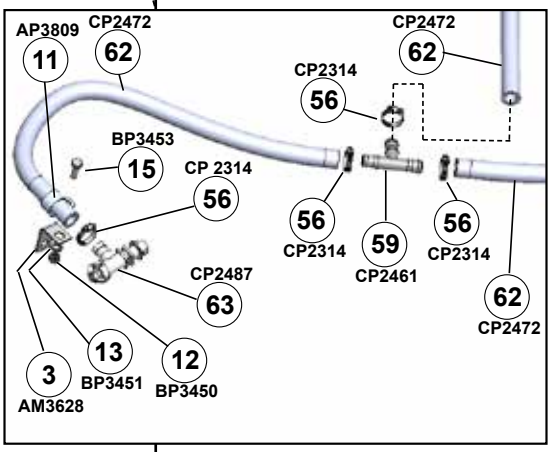

Assembly (Manifold and Suction Hoses Primary Wing)

AT7000	Task	Procedures	Illustrations

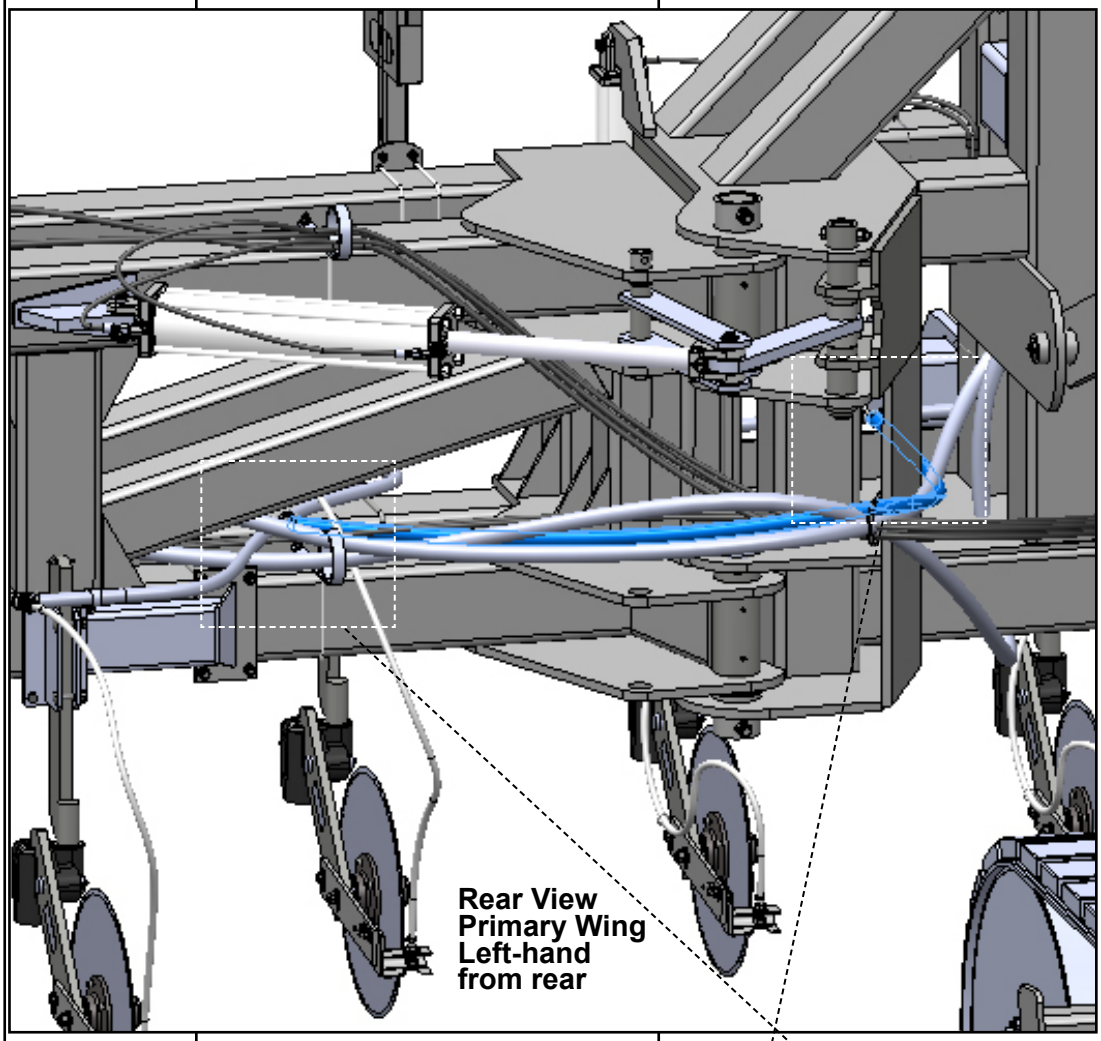

►	**Installation 3/4" suction hose primary wing**	1. Place (56) (CP2314) 1/2" - 1" worm gear hose clamp over (62) (CP2472) 3/4" suction hose. Install between (59) (CP2461) 3/4"HB-3/4"HB-3/4"HB ploy tees. Tighten (56) (CP2314) 1/2" - 1" worm gear hose clamps. 2. Repeat step one on right-hand side.

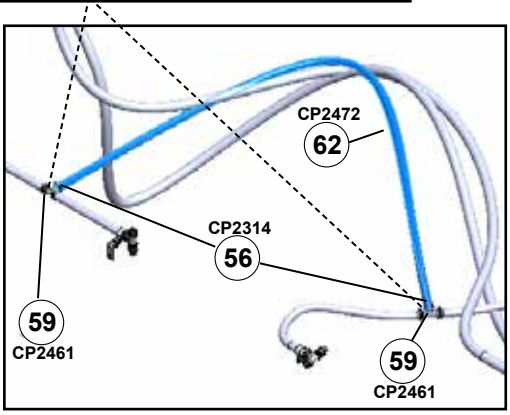

Assembly (Manifold and Suction Hose Secondary Wing)

AT7000	Task	Procedures	Illustrations

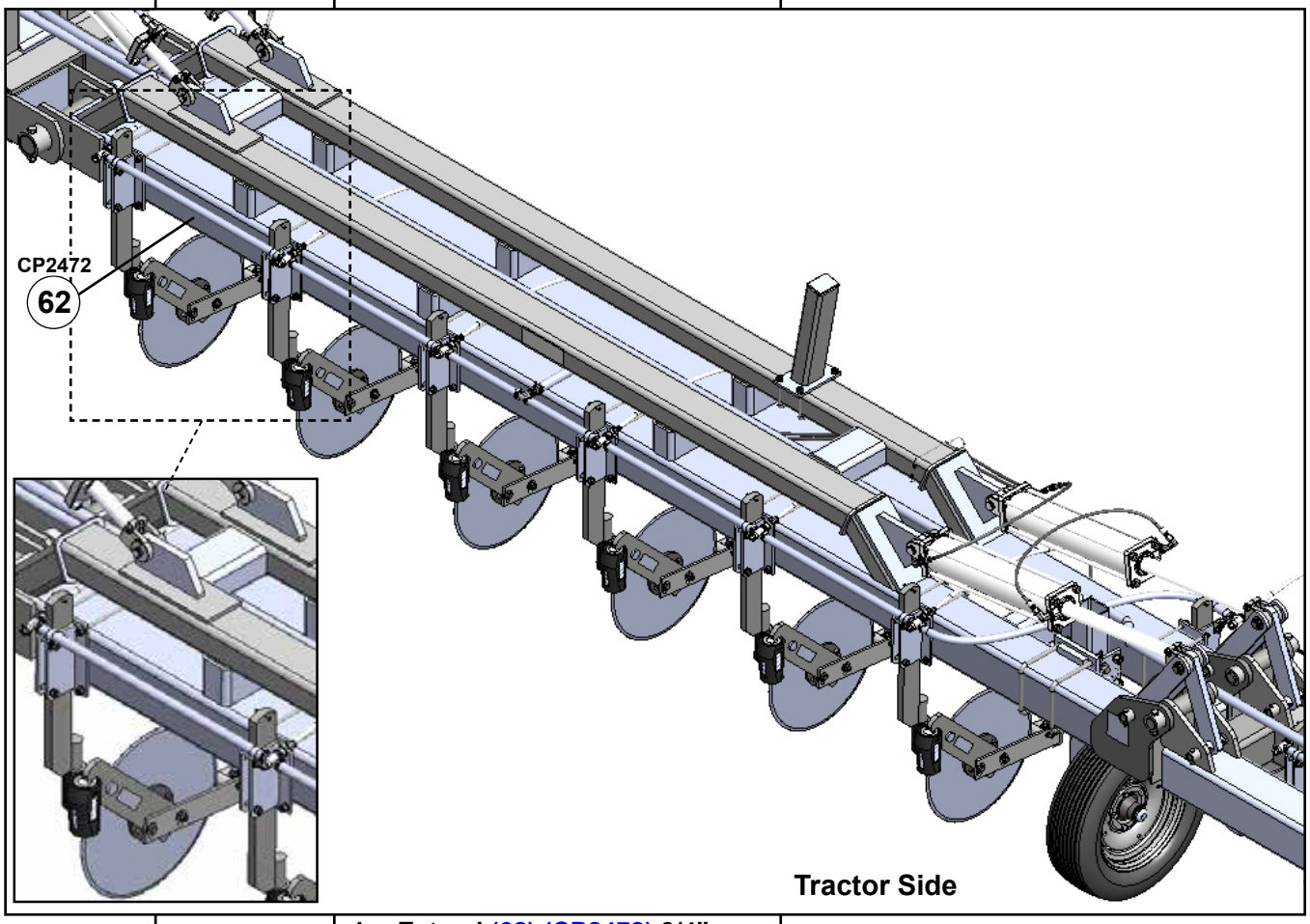

► Installation 3/4” suction hose secondary wing

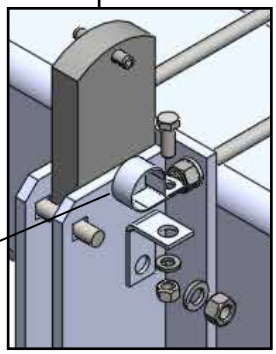

1. Extend (62) (CP2472) 3/4” rubber suction hose through (11) (AP3809) support clamp and place (56) (CP2314) 1/2” - 1” worm gear hose clamp over 3/4” suction hose. Push hose over (63) (CP2487) diaphragm check valve, single hose barb end.
   Tighten (56) (CP2314) 1/2” - 1” worm gear hose clamp.
2. Tighten support clamp to secure hose.
3. Pull (62) (CP2472) 3/4” rubber suction hose tight to next row.
4. Cut 3/4” suction hose. Place (56) (CP2314) 1/2” - 1” worm gear hose clamps over both ends of the 3/4” hose. Insert (d) (CP2488) diaphragm check valve, double shank 3/4” hose into each end of the 3/4” suction hose. Secure with (56) worm gear hose clamps.
   (d) Part of Jet Stream coulter assembly)
5. Install (11) (AP3809) support clamp over hose and secure.
6. Repeat step (4) for each single and double diaphragm rows.

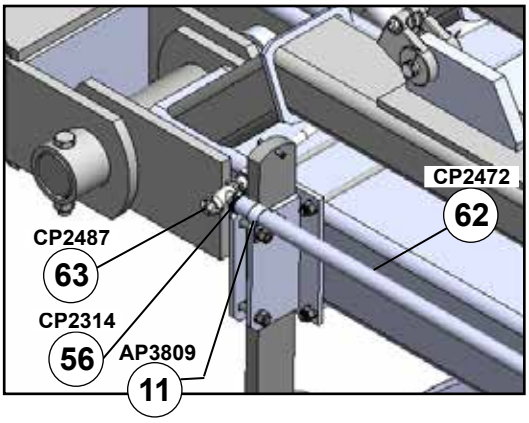

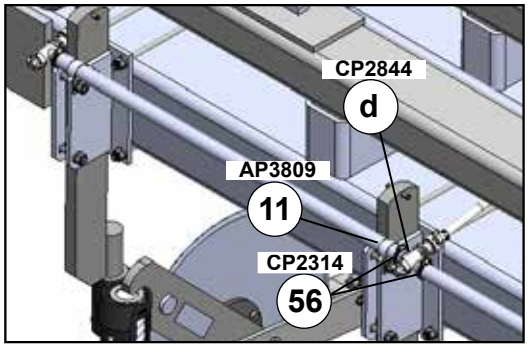

Assembly (Manifold and Suction Hose Secondary Wings)

AT7000	Task	Procedures	Illustrations

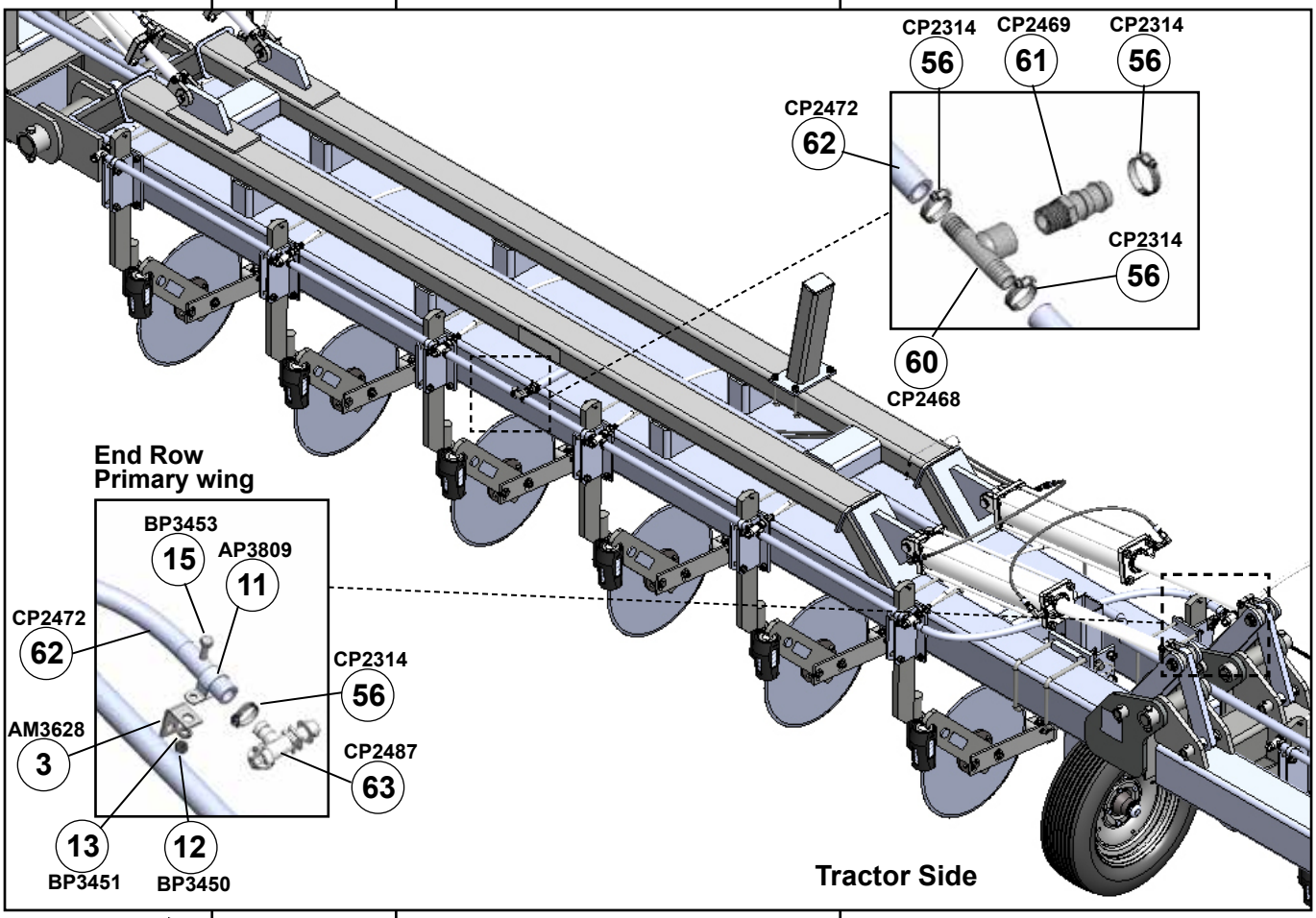

►	**Installation 3/4" suction hose secondary wing**	1. Between the third and fourth row install (60) (CP2468) 3/4" FB-3/4"HB-3/4"HB ploy tee and secure with (56) (CP2314) 1/2" - 1" worm gear hose clamps. 2. Place sealant on thread end of (61) (CP2469) 3/4"MP x 1"HB hose barb, ploy and install in (60) (CP2468) 3/4"FB-3/4"HB-3/4"HB ploy tee. 3. <u>The last row of the secondary wing.</u> Extend (62) (CP2472) 3/4" rubber suction hose through (11) (AP3809) support clamp and place (56) (CP2314) 1/2" - 1" worm gear hose clamp over 3/4" suction hose. Push hose over (63) (CP2487) diaphragm check valve, single hose barb end. Tighten (56) (CP2314) 1/2" - 1" worm gear hose clamp.	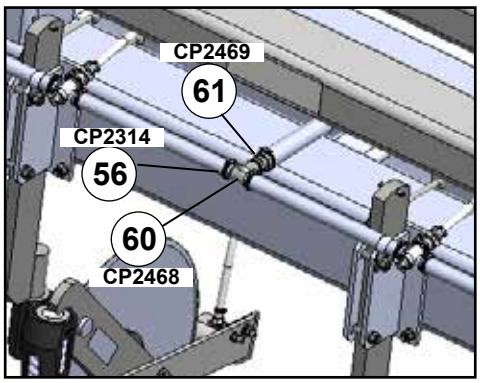 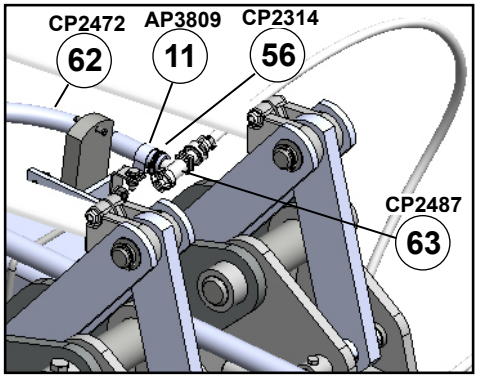 End Row Primary Wing

Assembly (Manifold and Suction Hose Third Wing)

AT7000	Task	Procedures	Illustrations

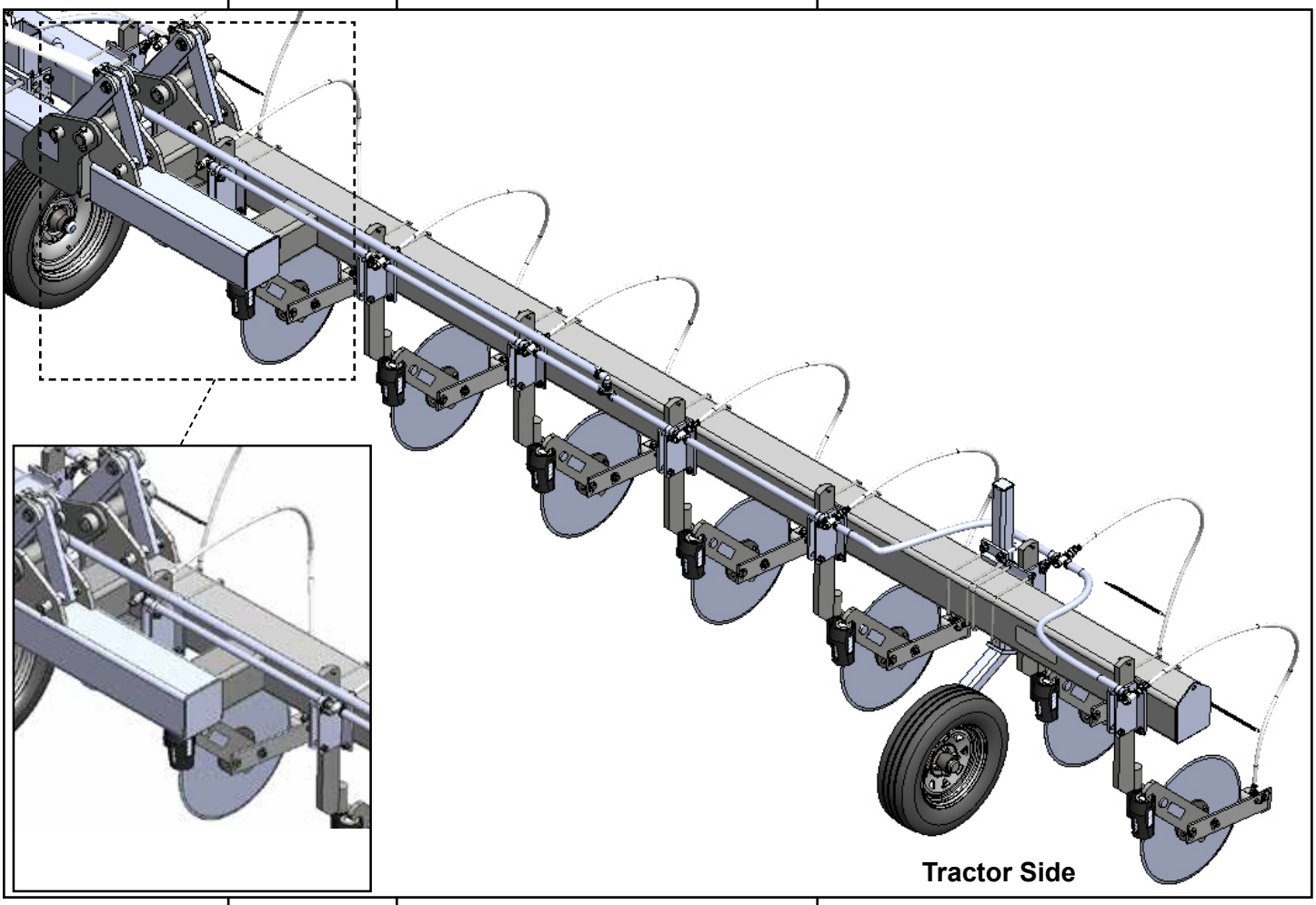

Installation 3/4" suction hose third wing

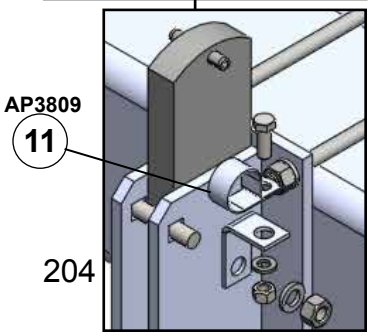

1. Extend (62) (CP2472) 3/4" rubber suction hose through (11) (AP3809) support clamp and place (56) (CP2314) 1/2" - 1" worm gear hose clamp over 3/4" suction hose. Push hose over (63) (CP2487) diaphragm check valve, single hose barb end. Tighten (56) (CP2314) 1/2" - 1" worm gear hose clamp.
2. Tighten support clamp to secure hose.
3. Pull (62) (CP2472) 3/4" rubber suction hose tight to next row.
4. Cut 3/4" suction hose. Place (56) (CP2314) 1/2" - 1" worm gear hose clamps over both ends of the 3/4" hose. Insert (d) (CP2488) diaphragm check valve, double shank 3/4" hose into each end of the 3/4" suction hose. Secure with (56) worm gear hose clamps. *(d) (Part of Jet Stream coulter assembly)*
5. Install (11) (AP3809) support clamp over hose and secure.
6. Repeat step (4) for each single and double diaphragm rows.

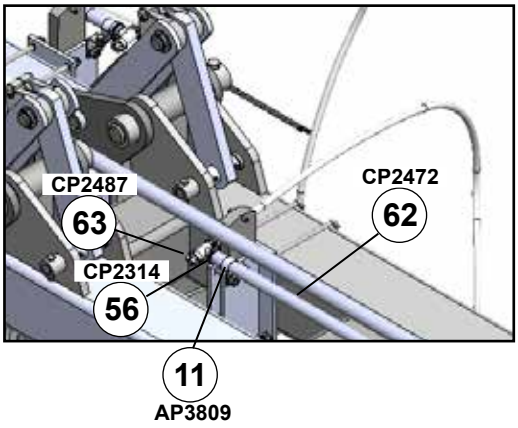

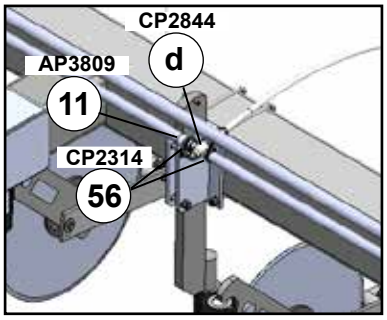

Assembly (Manifold and Suction Hose Third Wing)

AT7000	Task	Procedures	Illustrations

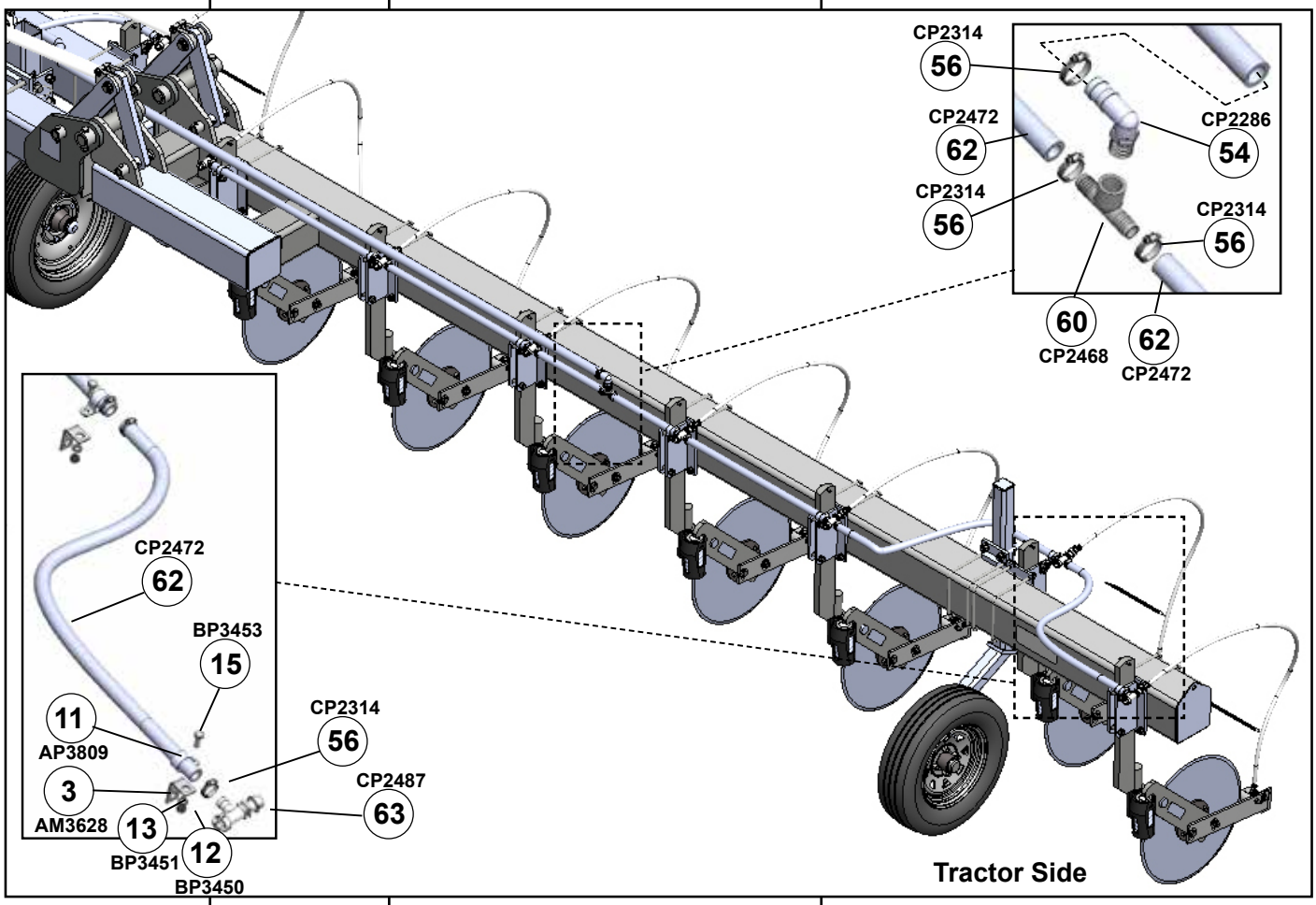

►	**Installation 3/4" suction hose third wing**	1. **Between the third and fourth row install (60) (CP2468) 3/4" FB-3/4"HB-3/4"HB ploy tee port up. and secure with (56) (CP2314) 1/2" - 1" worm gear hose clamps.** 2. **Place sealant of thread end of (54) (CP2286) 3/4"MP x 1"HB 90 degree elbow, ploy and install in (60) (CP2468) 3/4"FB-3/4"HB-3/4"HB ploy tee.** 3. **<u>The last row of the third wing.</u> Extend (62) (CP2472) 3/4" rubber suction hose through (11) (AP3809) support clamp and place (56) (CP2314) 1/2" - 1" worm gear hose clamp over 3/4" suction hose. Push hose over (63) (CP2487) diaphragm check valve, single hose barb end. Tighten (56) (CP2314) 1/2" - 1" worm gear hose clamp.**	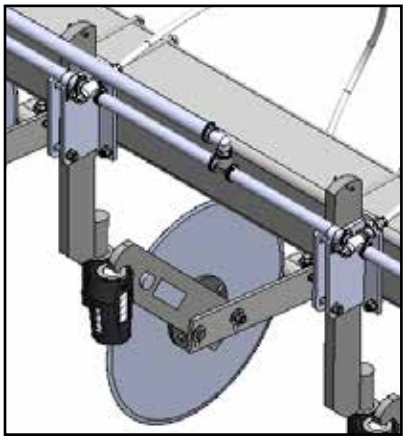 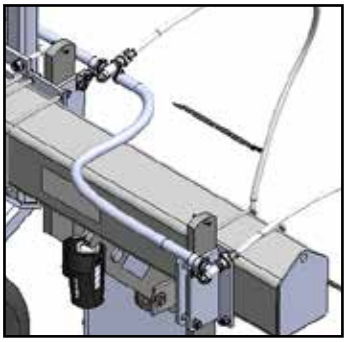

Assembly (Centrifugal Pump and Plumbing)

AT7000	Task	Procedures	Illustrations
▶	**Bottom Fill plumbing assembly**		

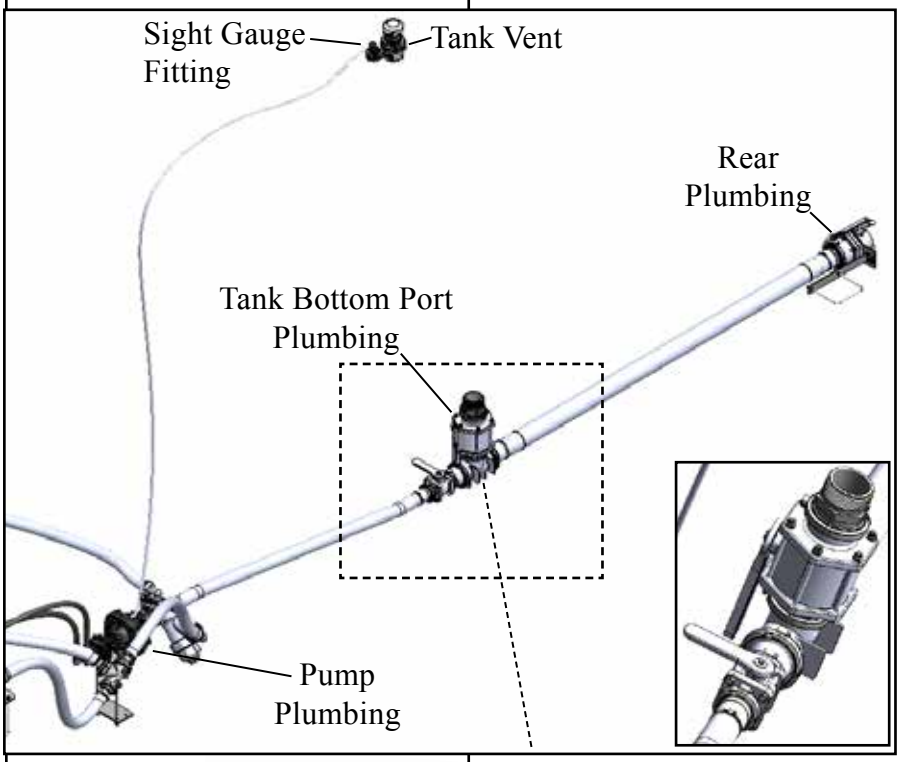

▶ ***NOTE:*** ***Place sealant on all threaded fittings.***

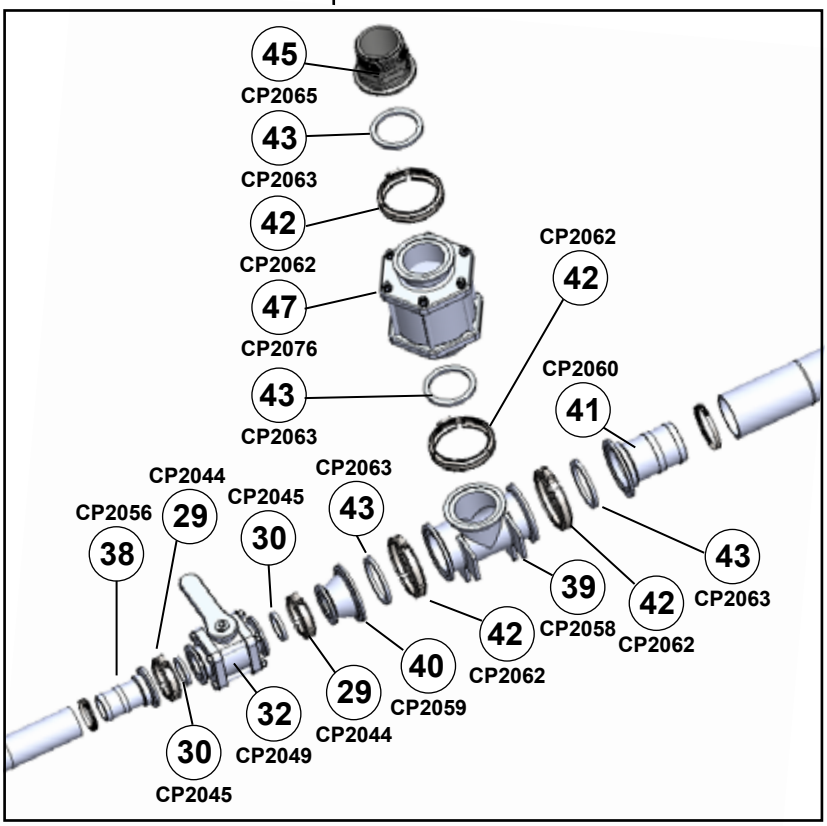

1. Place sealant on threads of (45) (CP2065) 3" MPT x 3" flange adapter and install in bottom port of tank.

2. Mount (47) (CP2076) 3" ball valve with handle down to 3" flange adapter with (43) (CP2063) 3" gasket and (42) (CP2062) 3" clamp worm screw clamp.

3. Attach (39) (CP2058) 3" tee flange to 3" valve with (43) (CP2063) 3" gasket and (42) (CP2062) 3" clamp worm screw clamp.

4. Place (41) (CP2060) 3" flange x 3" hose barb on (39) 3" tee with (43) (CP2063) 3" gasket and (42) (CP2062) 3" clamp worm screw clamp.

5. Mount (40) (CP2059) 3" x 2" flange reducer to (39) 3" tee with (43) (CP2063) 3" gasket and (42) (CP2062) 3" clamp worm screw clamp.

6. Attach (32) (CP2049) 2-1/2" port ball valve to (40) reducer with (30) (CP2045) 2" flange gasket and (29) (CP2044) 2" worm screw clamp

7. Attach (38) (CP2056) 2" flange x 2" hose barb to (32) 2-1/2" ball valve with (30) (CP2045) 2" flange gasket and (29) (CP2044) 2" worm screw clamp

Assembly (Centrifugal Pump and Plumbing)

AT7000	Task	Procedures	Illustrations
▶	**Rear Fill plumbing assembly**		

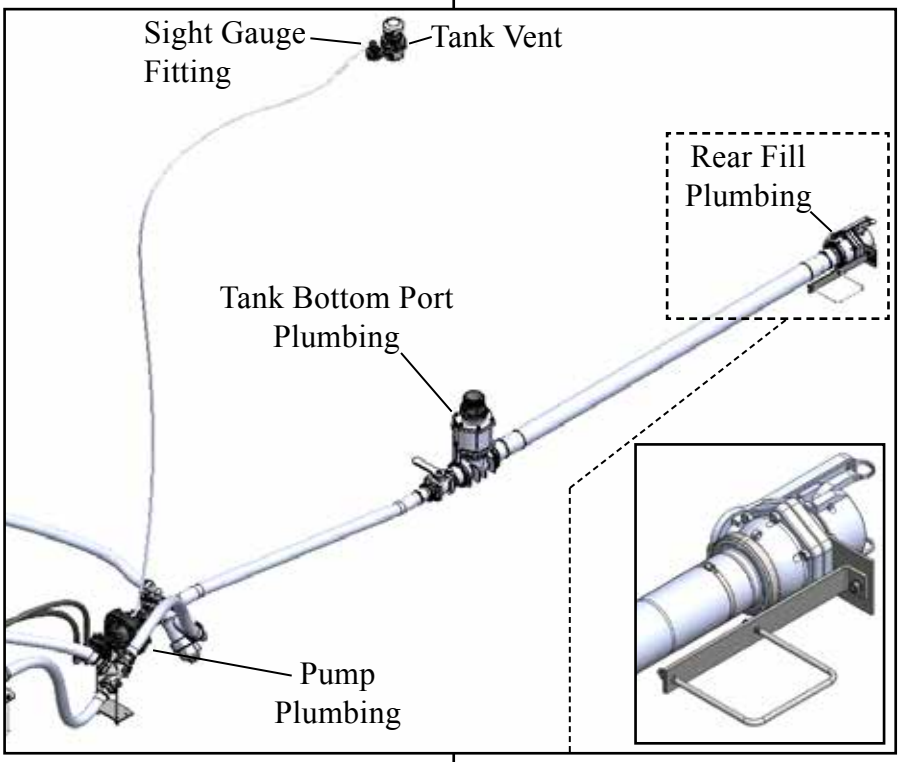

1. **Remove the two hex cap screws from (44) (CP2064) valve, ball, 3” flange - 3” male adapter. Install (5) (AM4827) fill valve vertical support plate (850) and replace hex cap screws.**

2. **Place (41) (CP2060) 3” flange x 3” hose barb on (44) (CP2064) 3” flange x 3” male adapter ball valve with (43) (CP2063) 3” gasket and (42) (CP2062) 3” clamp worm screw clamp.**

3. **Place (46) (CP2068) 3” cap on (44) (CP2064) 3” ball valve.**

4. **Attach (8) (AM7129) bottom fill bracket to (5) (AM4827) support plate with (15) (BP3453) 3/8” x 1” hex cap screw, (16) (BP3015) 3/8” flat washer, and (12) (BP3450) 3/8” hex nut.**

5. **Mount rear fill assembly to wing stop frame upright with (24) (BP3351) 3/8” x 6” x 7” u-bolt, (13) (BP3451) 3/8” lock washers and (12) (BP3450) 3/8” hex nuts.**

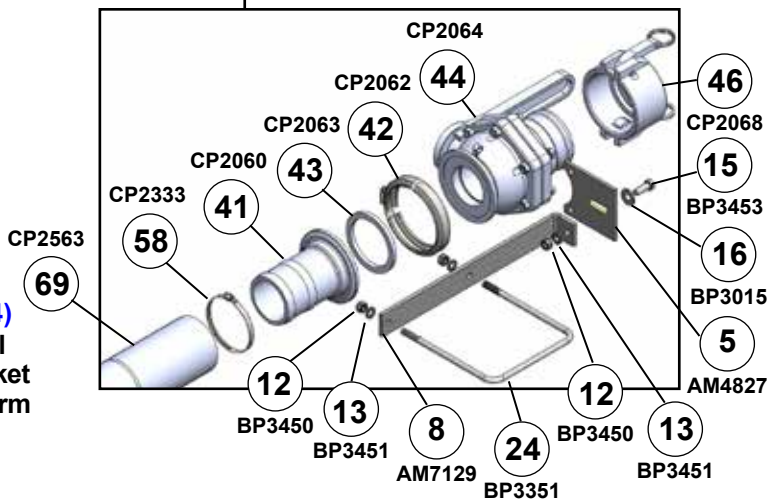

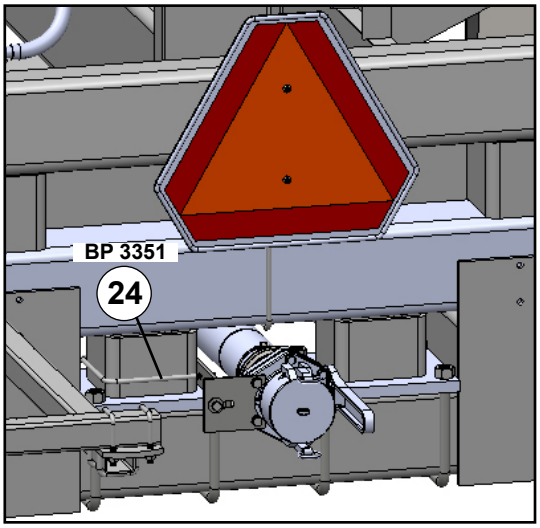

Assembly (Centrifugal Pump and Plumbing)

AT7000	Task	Procedures	Illustrations
►	**Tank Vent and sight gauge Assembly**	**1. Drill 3” hole at the top of tank, arms reach from tank opening front side.** **2. Install (28) (CP2043) hooded vent *without* screen into tank outlet fitting assembly Tighten hooded vent. The outlet fitting nut goes on the outside of the tank. Insert (68) (CP2550) tank outlet fitting 2” assembly into 3” hole from inside the tank. Tighten tank fitting hex nut.** **3. Install (27) (CP2042) hooded vent *with* screen to the outside of the tank.** **4. Drill 1-1/2” hole at the top of tank near end of sight gauge groove.** **5. Insert (26) (CP2040) tank outlet fitting 1/2” FPT fits 1-3/8” hole. Install (49) (CP2085) 1/2” MP x 1/4” hose barb 90 degree elbow.** **6. Attach (70) (CP2573) 1/4” EVA hose sight gauge hose to upper 90 degree 1/4” hose barb and secure with (55) (CP2313) 1/4”-5/8” stainless steel hose clamp.** **7. Extend sight gauge hose hose down front to pump.**	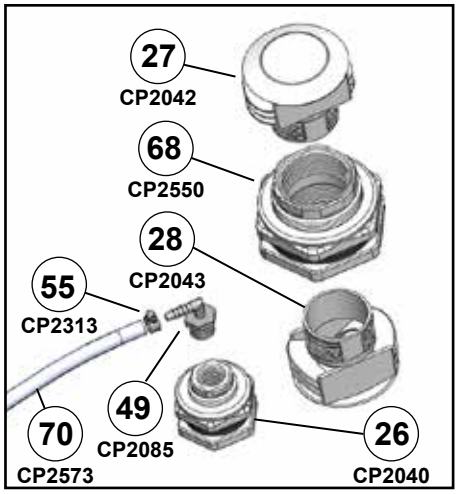 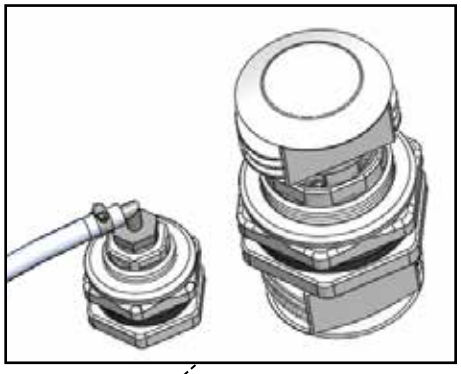 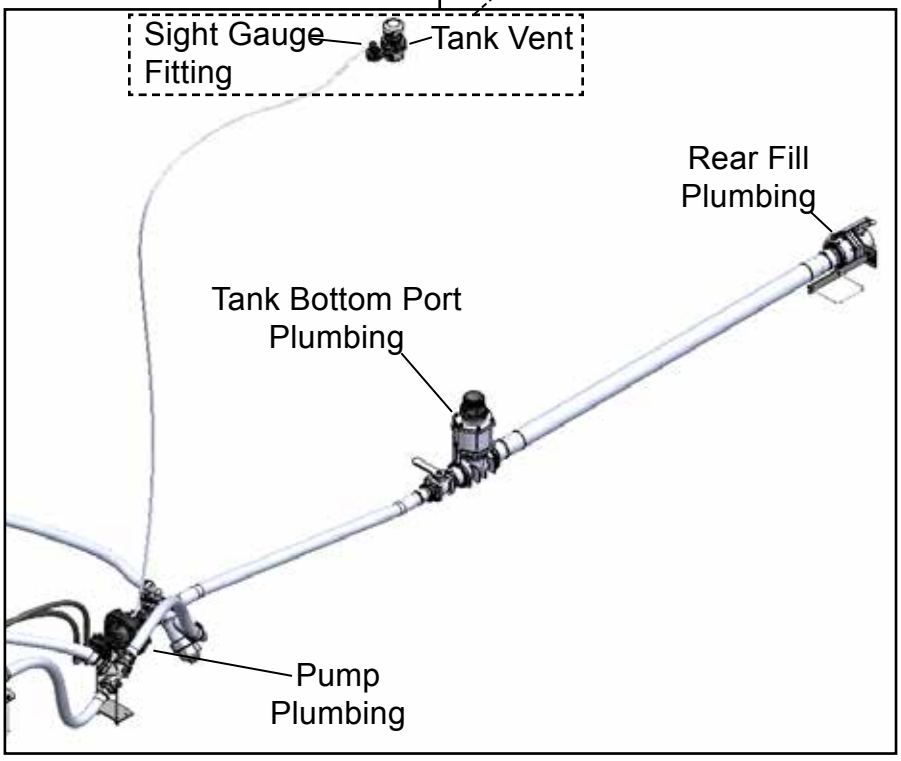

Assembly (Centrifugal Pump and Plumbing)

AT7000	Task	Procedures	Illustrations

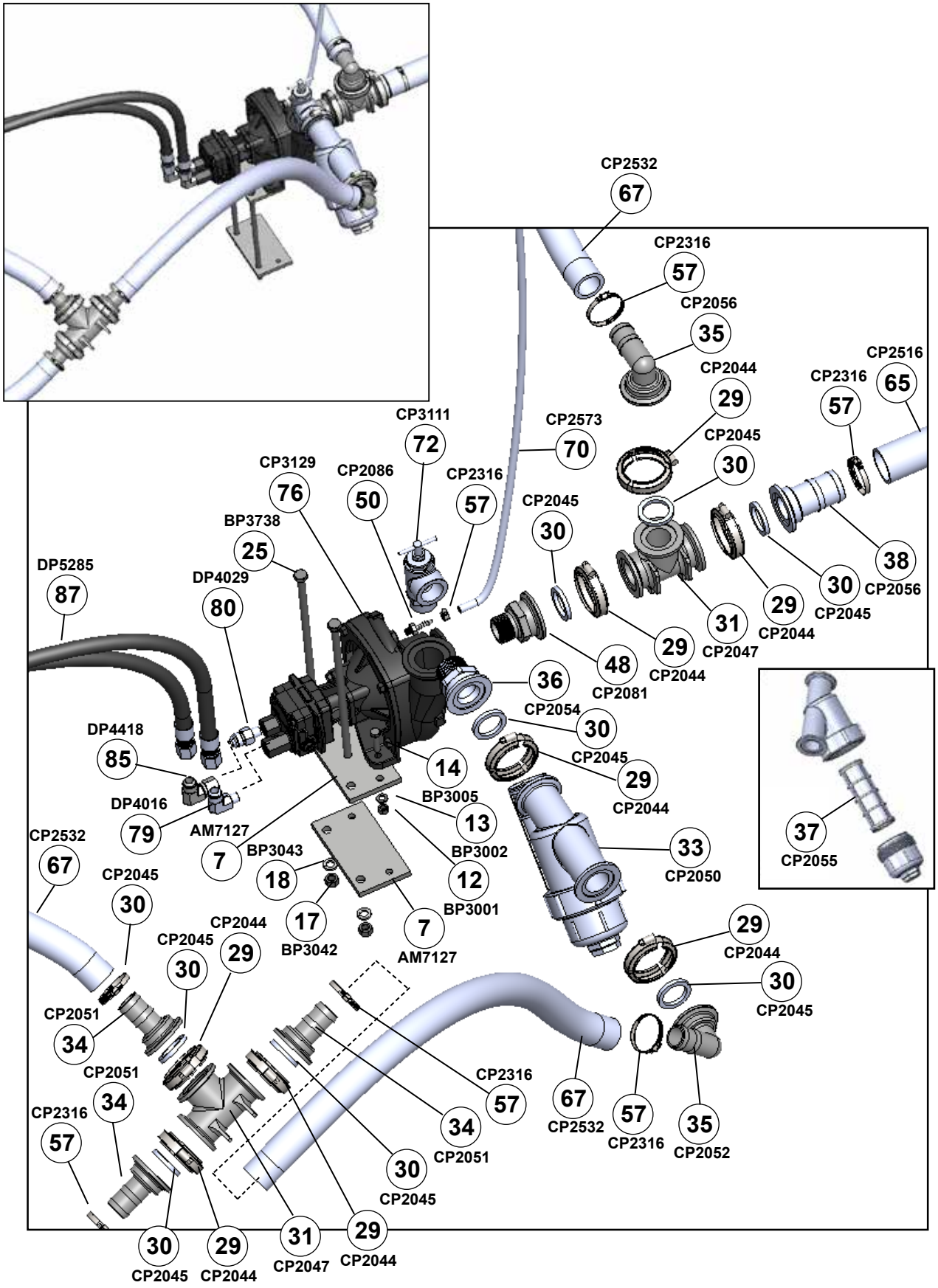

Assembly (Centrifugal Pump and Plumbing)

AT7000	Task	Procedures	Illustrations
▶	**Pump assembly**		
▶	***NOTE:*** ***Place sealant on all threaded fittings.***		

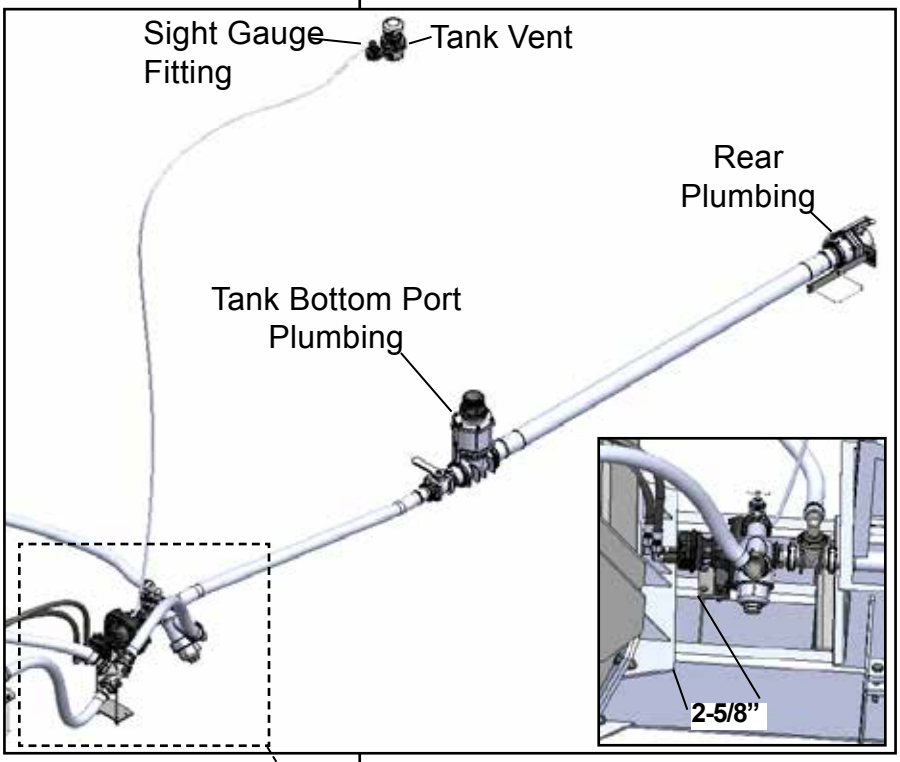

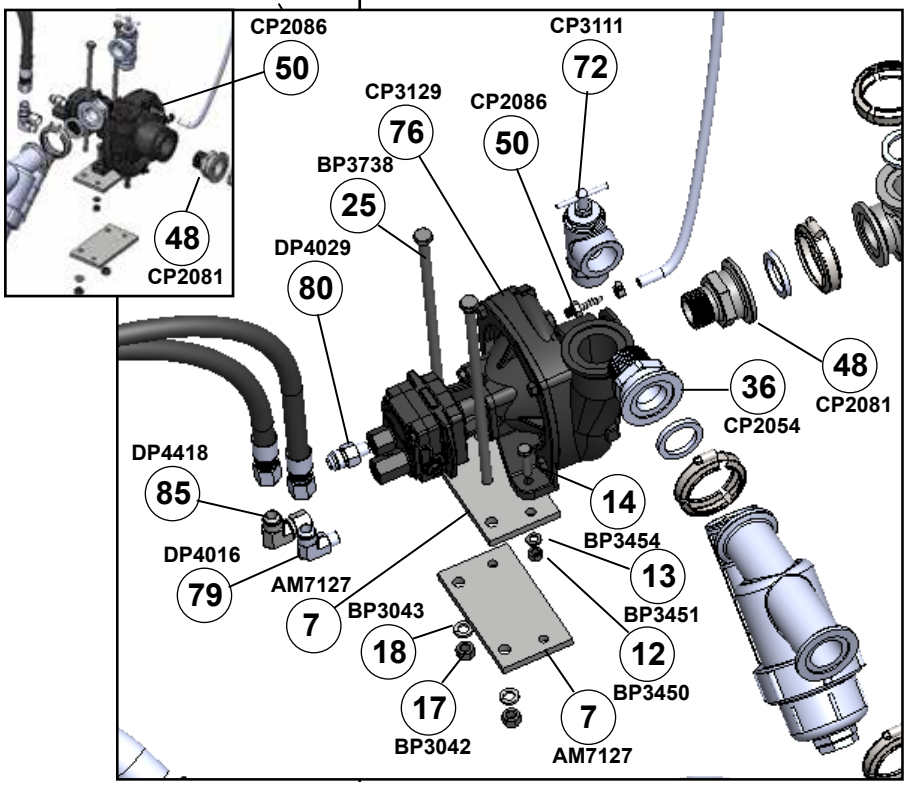

1. Before mounting the pump, install (80) (DP4029) 10MJ-8MP straight adapter in the right-hand pump port.

2. Install (79) (DP4016) 10MJ-8MP 90 degree male elbow adapter in the left-hand pump port.
   Install (85) (DP4418) 10MJIC -10FJX 90 degree elbow in the right-hand pump port.

3. Apply sealant to (48) (CP2081) 1-1/4" MPT x 2" flange adapter and install in the the tank side port of the pump.

4. Apply sealant to threads and install (72) (CP3111) 1-1/4" throttling valve into top port of pump.

5. Apply sealant to threads and install (50) (CP2086) 1/8" MP x 1/4" hose barb in the tank side port.

6. Place (7) (AM7127) mounting plate on the top of center frame beam. Insert two (25) (BP3738) 1/2" x 12" hex cap screws from the top through the mounting plate.

7. Place lower (7) (AM7127) mounting plate over (25) hex cap screws. Install (18) (BP3043) 1/2" lock washers and (17) BP3042) 1/2" hex nuts.

8. Position mounting plates 2-5/8" from side of mounting plate to front frame weldment. Secure 1/2" hex cap screws.

9. Mount pump to mounting top plate with (14) (BP3454) 3/8" 1-1/2" hex cap screws. Secure with (13) (BP3451) 3/8" lock washers and (12) (BP3450) 3/8" hex cap screws.

Assembly (Centrifugal Pump and Plumbing)

AT7000	Task	Procedures	Illustrations
►	**Pump assembly**		

1. Apply sealant to (36) (CP2054) 1-1/2” MPT x 2” flange and install in (72) (CP3111) 1-1/4” throttling valve.

2. Attach (33) (CP2050) strainer with 2” flange to (36) with (30) (CP2045) 2” gasket and (29) (CP2044) 2” worm screw clamp.

3. Secure (35) (CP2052) 1-1/2” MPT x 2” flange adapter to strainer with (30) (CP2045) 2” gasket and (29) (CP2044) 2” worm screw clamp.

4. Mount (31) (CP2047) 2” tee flange to (48) with (30) (CP2045) 2” gasket and (29) (CP2044) 2” worm screw clamp.

5. Attach (38) (CP2056) 2” flange x 2” hose barb to (31) with (30) (CP2045) 2” gasket and (29) (CP2044) 2” worm screw clamp.

6. Install (35) (CP2056) 2” flange x 1-1/2” hose barb 90 degree elbow to top port of (31) with (30) (CP2045) 2” gasket and (29) (CP2044) 2” worm screw clamp.

7. Attach (70) (CP2573) 1/4” EVA hose sight gauge hose to (50) (CP2086) 1/8” MP x 1/4” hose barb and secure with (55) (CP2313) 1/4”-5/8” stainless steel hose clamp.

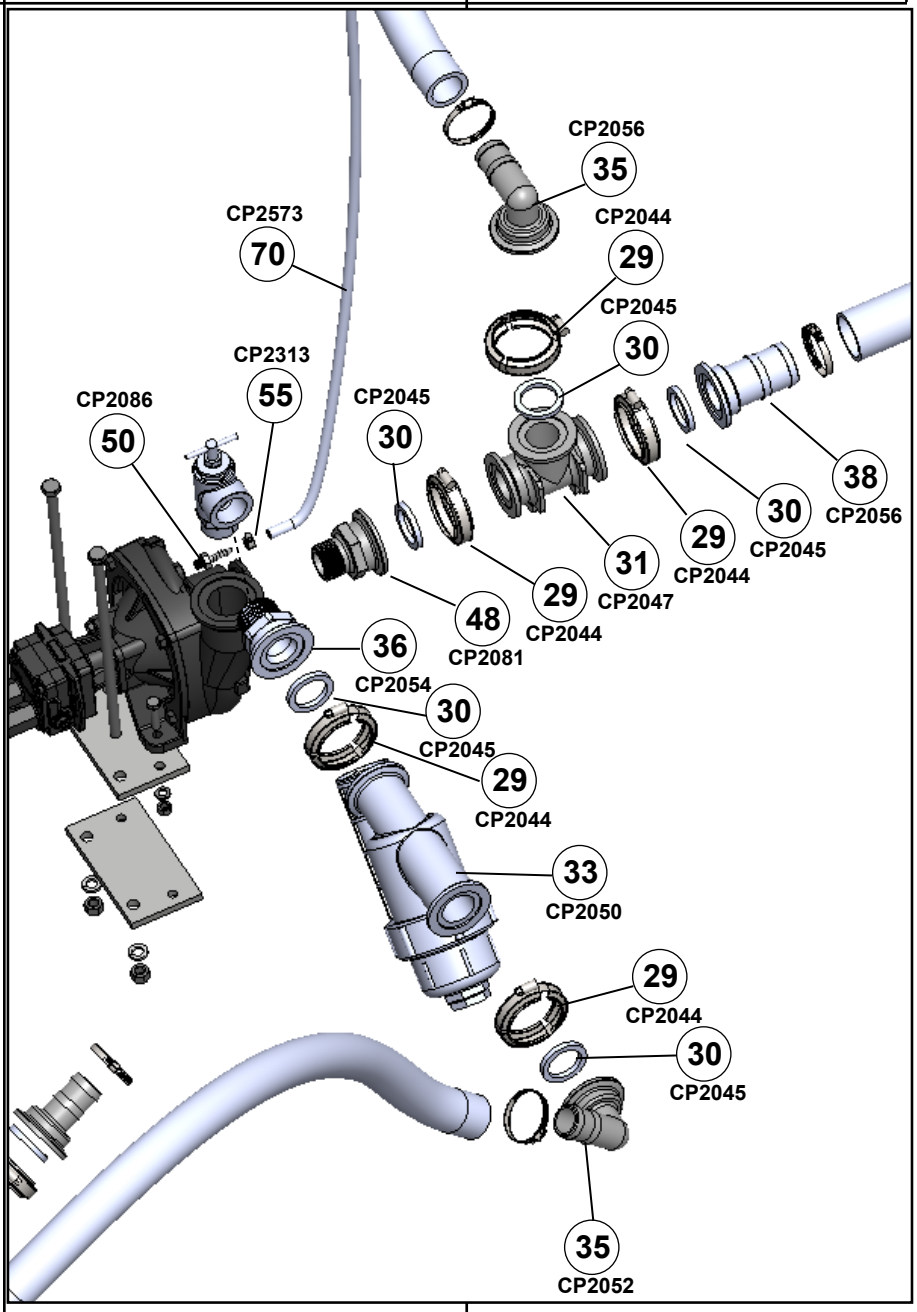

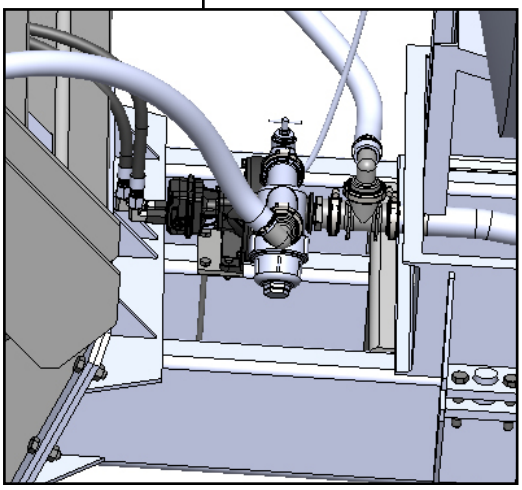

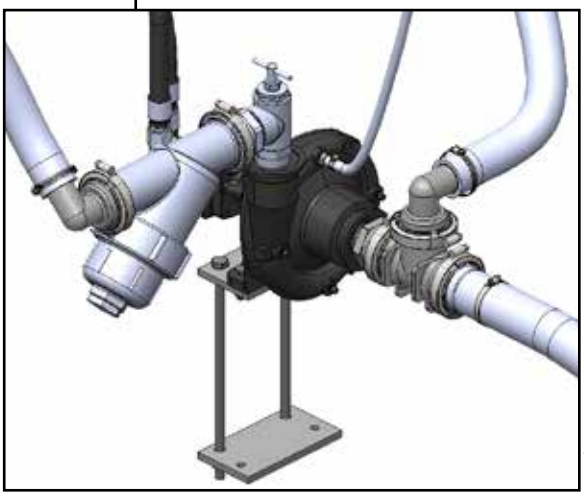

Assembly (Centrifugal Pump and Plumbing)

AT7000	Task	Procedures	Illustrations
►	**Rear Fill plumbing assembly**		

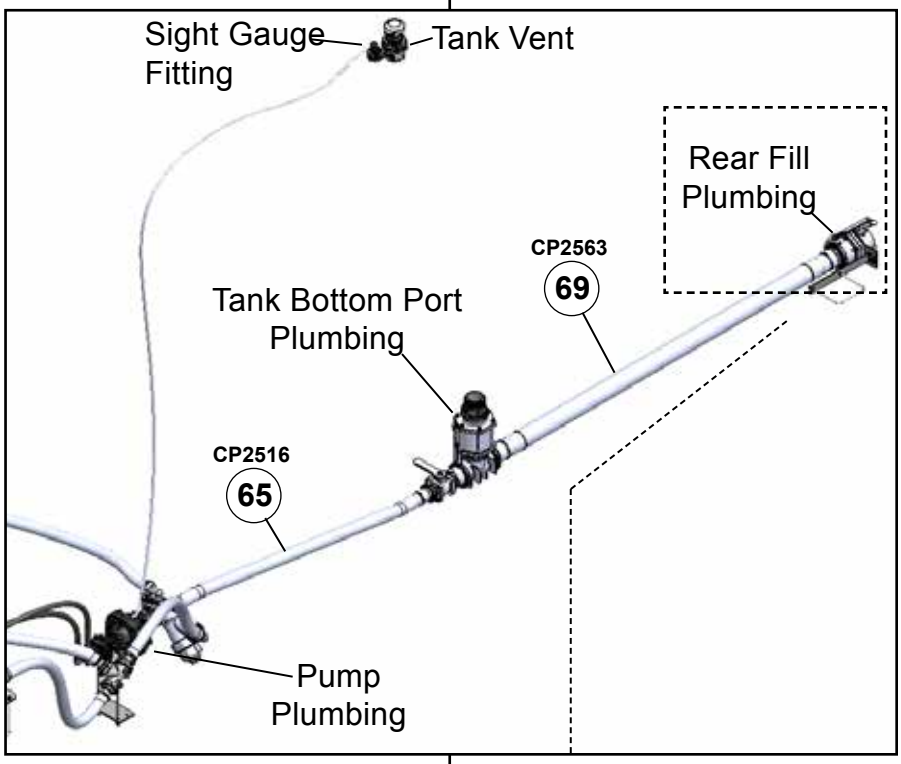

1. **Measure between hose barbs. Cut (69) (CP2563) 3" suction hose PVC. Place (58) (CP2333) 2-1/2"-3" worm gear hose clamps over suction hose and push on each hose barb. Secure (58) (CP2333) 2-1/2"-3" worm gear hose clamps on both ends.**

2. **Measure between hose barbs. Cut (65) (CP2516) 2" suction hose PVC. Place (57) (CP2316) 1-1/4"-2" worm gear hose clamps over suction hose and push on each hose barb. Secure (57) (CP2316) 1-1/4"-2" worm gear hose clamps on both ends.**

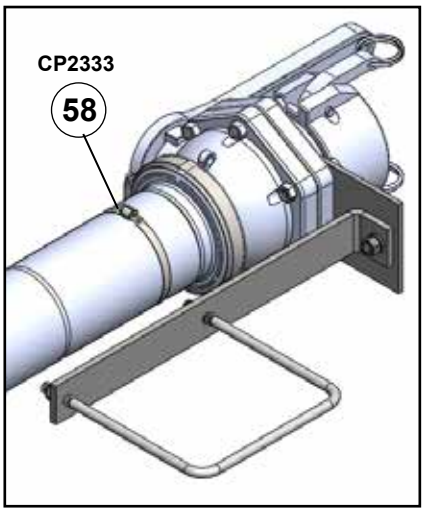

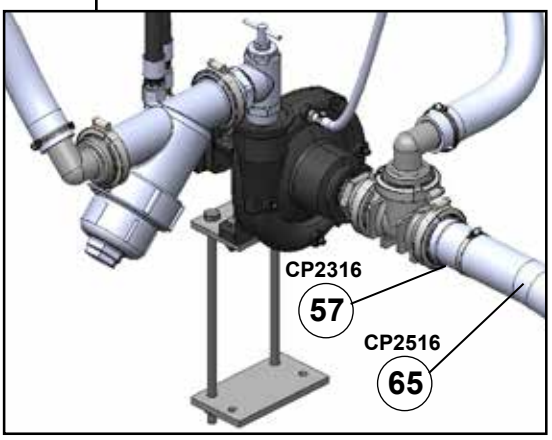

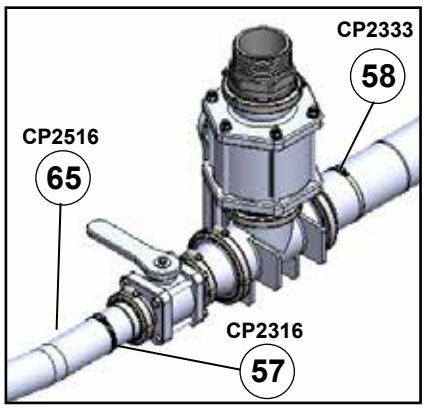

Task	Procedures	Illustrations
► **Pump assembly**		

1. **Assemble (31) (CP2047) 2" flange tee with three (34) (CP2051) 2" flange x 1-1/2" hose barb fittings. Secure with (30) (CP2045) 2" gaskets and (29) (CP2044) 2" worm screw clamps.**

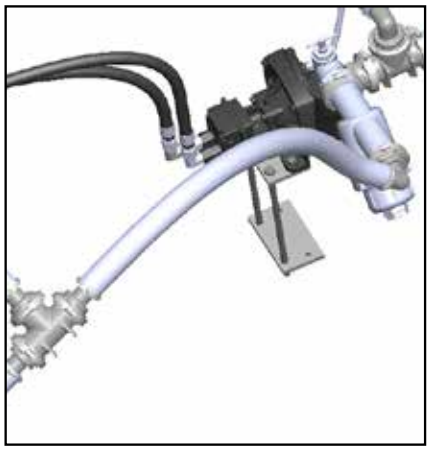

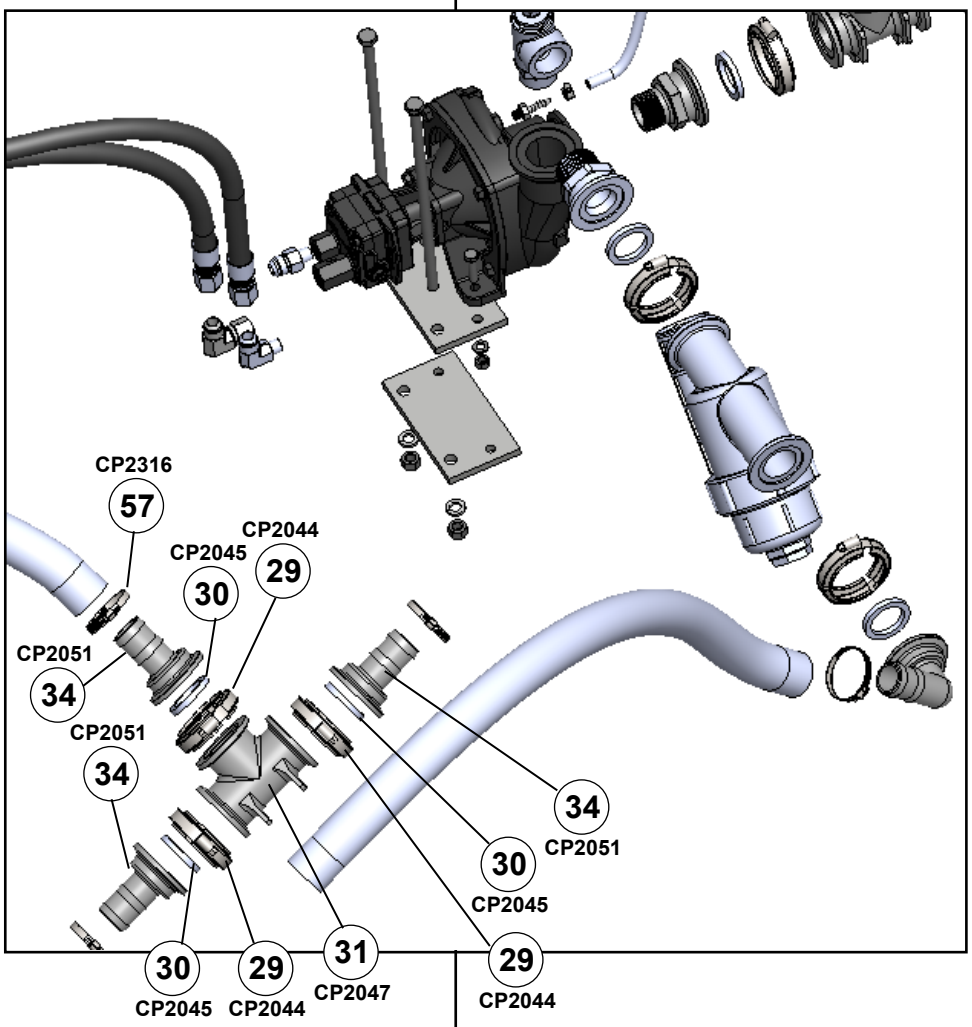

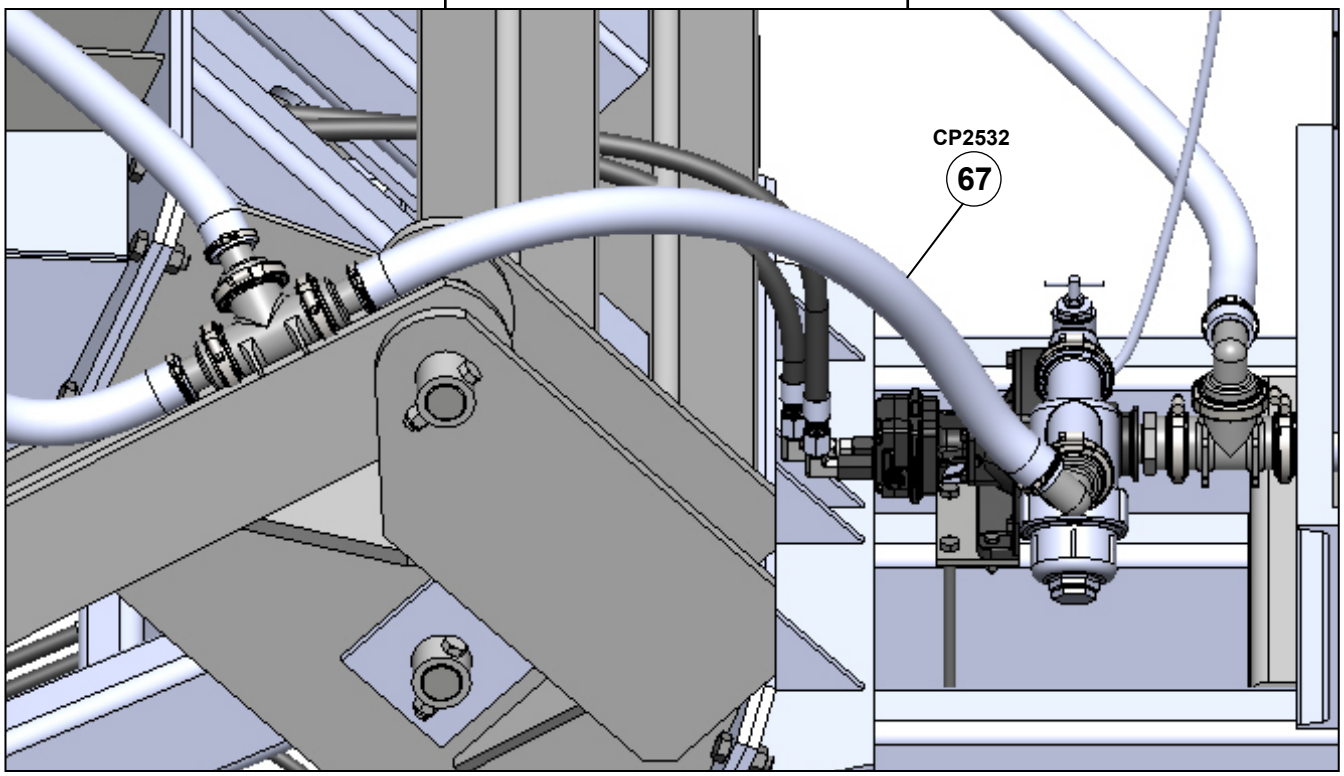

Assembly (Centrifugal Pump and Plumbing)

AT7000	Task	Procedures	Illustrations

TeeJet regulating valve mounting

NOTE: ***Left-hand and right-hand as viewed from the rear***

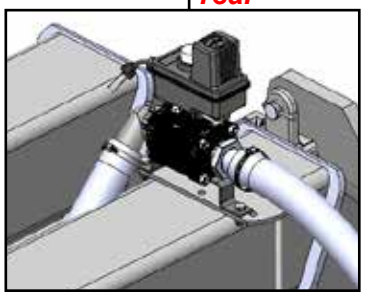

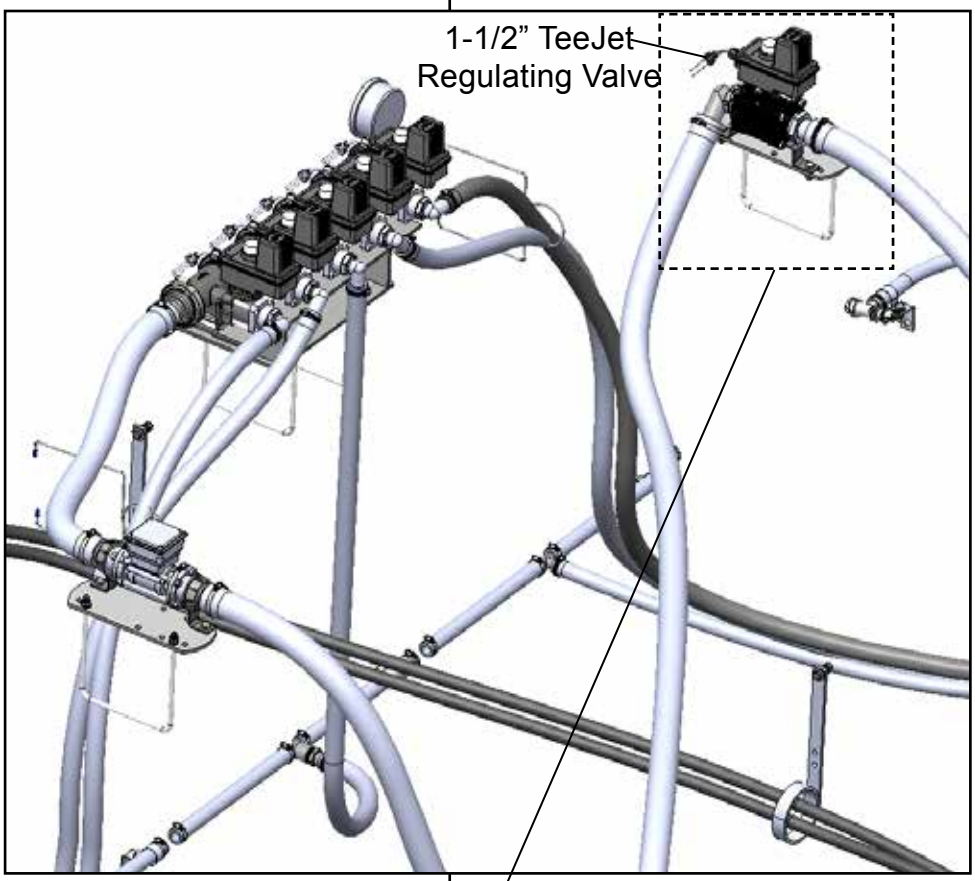

1. Place (1) (AM3408) 1/4" x 4" x 11-3/16" mounting plate on the rear, top tube of the center section. Insert (23) (BP3335) 3/8" x 7"W x 8"L u-bolt in the far right set of holes. Place (13) (BP3451) 3/8" lock washers and (12) (BP3450) 3/8" hex nuts on u-bolt. Slide assembly to center until the u-bolt contacts the upright.

2. Position (2) (AM3564) valves & flow meter mounting brackets in the second hole in from the outside edge. Secure with (15) (BP3453) 3/8" x 1" hex cap screws, (13) (BP3451) 3/8" lock washers and (12) (BP3450) 3/8" hex nuts.

3. Attach (75) (CP3123) 1-1/2" teejet regulating valve to brackets with (58) (CP2333) 2-1/2"-3" worm gear hose clamps.

4. Apply sealant to threads of (64) (CP2490) 1-1/2"MP x 1-1/2" HB 90 degree elbow and install in the tractor side port.

5. Apply sealant to threads of (53) (CP2267) 1-1/2"MP x 1-1/2" hose barb and install in the tank side port.

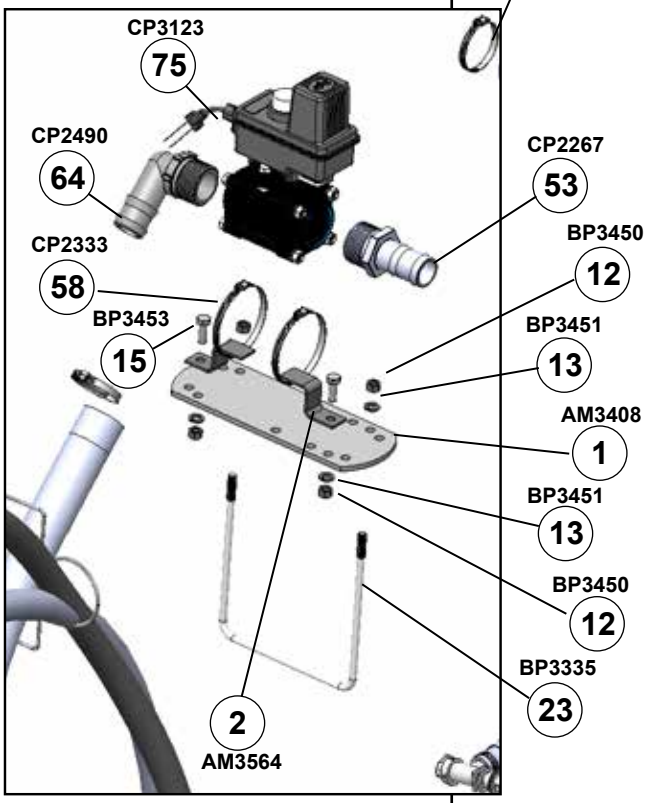

Manifold valve shutoff mounting

NOTE: *Left-hand and right-hand as viewed from the rear*

1. Center (6) (AM7126) sectional valve mounting bracket top shelf to the tank side. Place bracket on center section tractor side tube. Insert two (23) (BP3335) 3/8" x 7"W x 8"L u-bolts. Secure with (13) (BP3451) 3/8" lock washers and (12) (BP3450) 3/8" hex nuts.

2. Assemble five (73) (CP3121) manifold shutoff valves together with (30) (CP2045) 2" gaskets, (29) (CP2044) 2" worm gear flanges.

3. Position manifold shutoff assembly over slotted holes in mounting bracket and insert two (19) (BP3108) 5/16" x 1" hex cap screws through two valves. Secure with (22) (BP3159) 5/16" flat washers, (21) (BP3158) 5/16" lock washers, and (20) (BP3157) 5/16" hex nuts.

4. Attach (51) (CP2088) 2" flange plug with 1/4" gauge port on right-hand side from the rear manifold shutoff. Secure with (30) (CP2045) 2" gasket, (29) (CP2044) 2" worm gear flange.
   Apply sealant to (78) (DP4012) 4MP-4FP 90 degree street elbow and install in (51) gauge port. Apply sealant to (71) (CP2575) 0-160 psi gauge and install.

5. Attach (34) (CP2051) 2" flange x 1-1/2" hose barb fitting to left-hand from the rear manifold shutoff. Secure with (30) (CP2045) 2" gasket, (29) (CP2044) 2" worm gear flange.

6. Apply sealant and install five (52) (CP2190) 1"MP x 1" HB 90 degree elbows in tank side manifold shutoff ports.
   Consult diagram for final position of hose barb end of fitting.

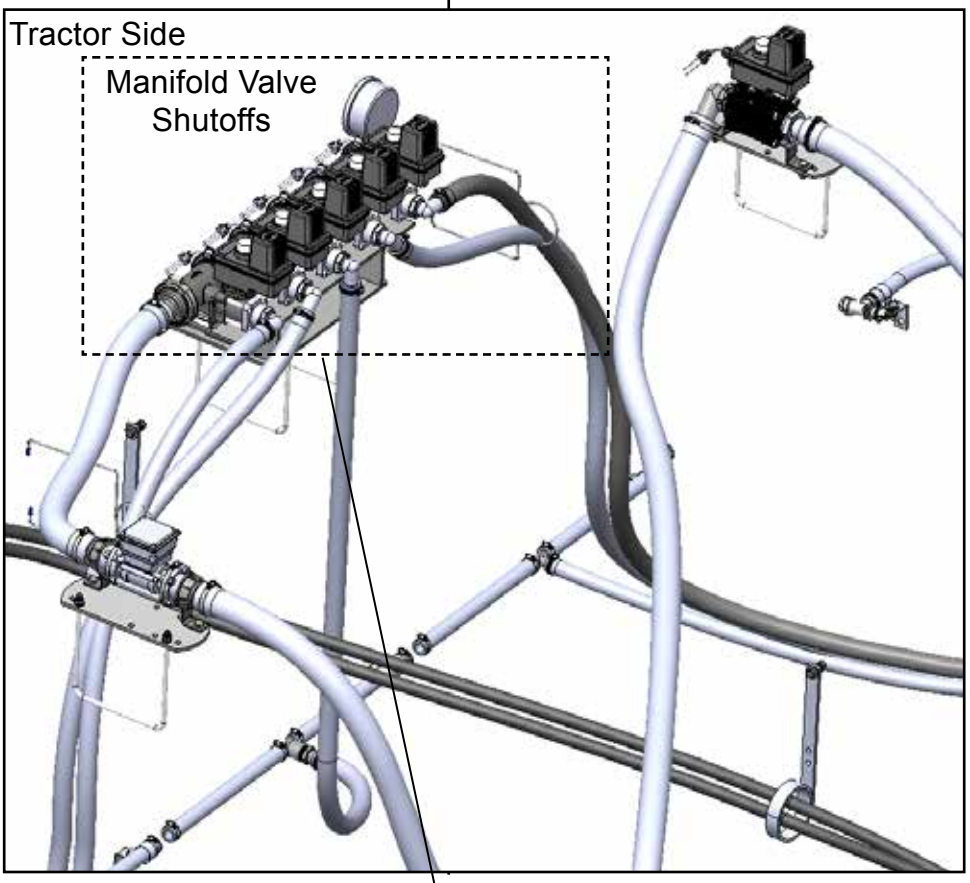

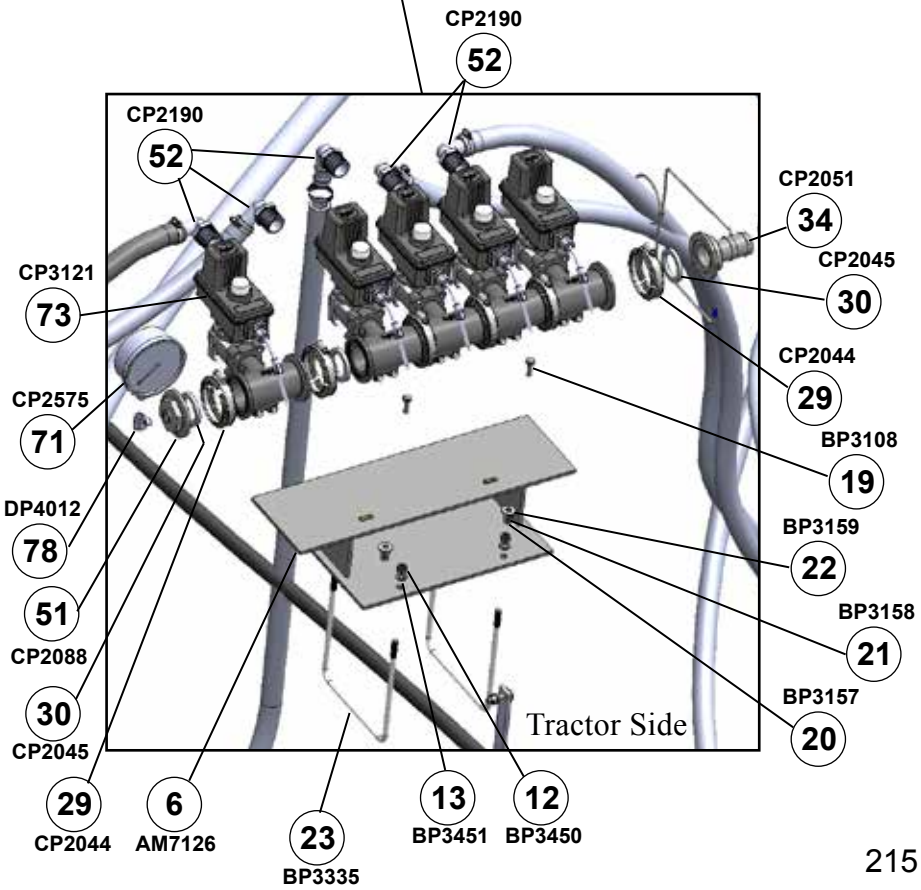

Assembly (Centrifugal Pump and Plumbing)

AT7000	Task	Procedures	Illustrations

Flow meter mounting

NOTE: *Left-hand and right-hand as viewed from the rear*

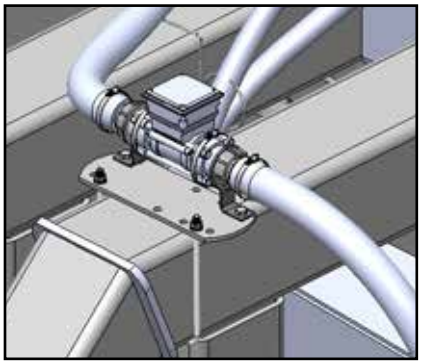

1. Place (1) (AM4308) 1/4" x 4" x 11-3/16" mounting plate on the rear, top tube of the center section, between vertical weldment and 45 angle weldment. Insert (23) (BP3335) 3/8" x 7"W x 8"L u-bolt in the far left-hand from the rear set of holes. Place (13) (BP3451) 3/8" lock washers and (12) (BP3450) 3/8" hex nuts on u-bolt. Center u-bolt in opening and tighten hex nuts.

2. Position (2) (AM3564) valves & flow meter mounting bracket in the second hole in from the outside edge. Secure with (15) (BP 3453) 3/8" x 1" hex cap screws, (13) (BP3451) 3/8" lock washers and (12) (BP3450) 3/8" hex nuts.

3. Attach (74) (CP3122) flow meter to brackets with (58) (CP2333) 2-1/2"-3" worm gear hose clamps.

4. Apply sealant to threads on (74), each end and install (77) (CP3130) 1-1/2" BSP -1-1/2" hose barb adapters.

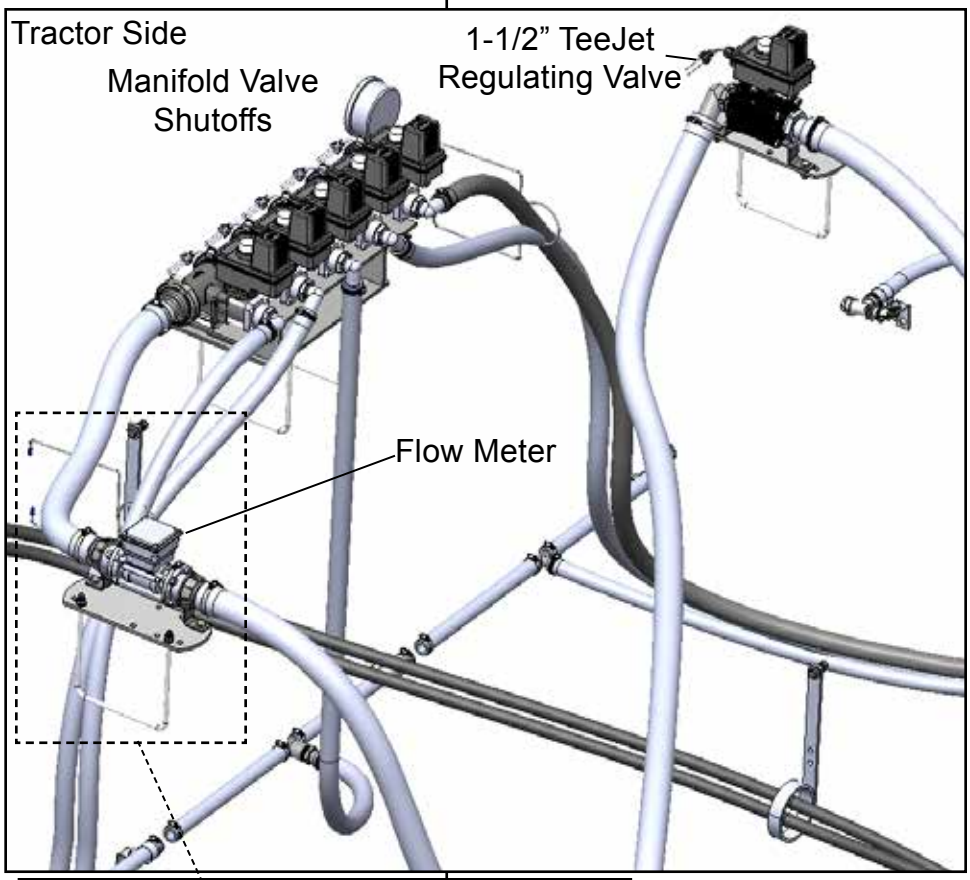

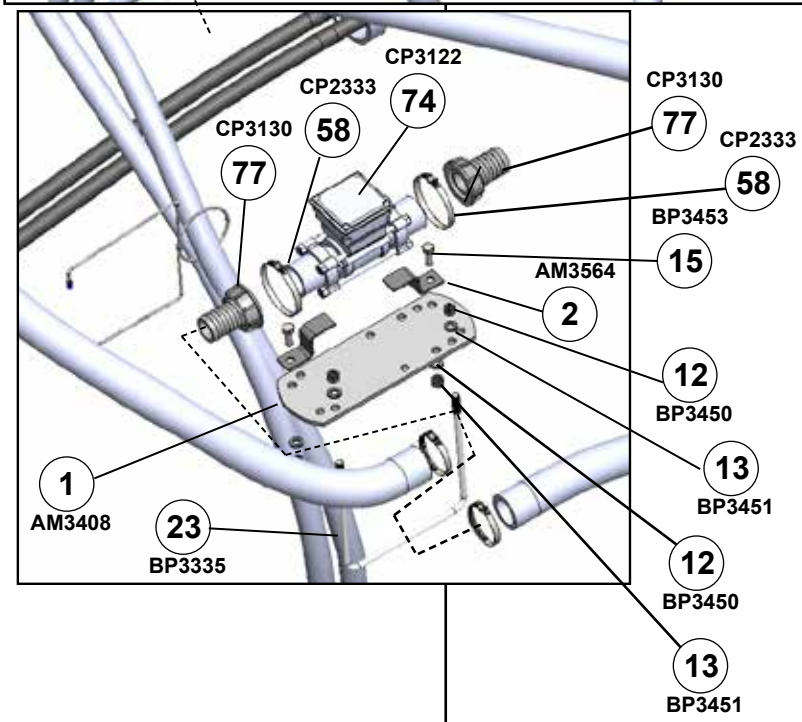

Task	Procedures	Illustrations

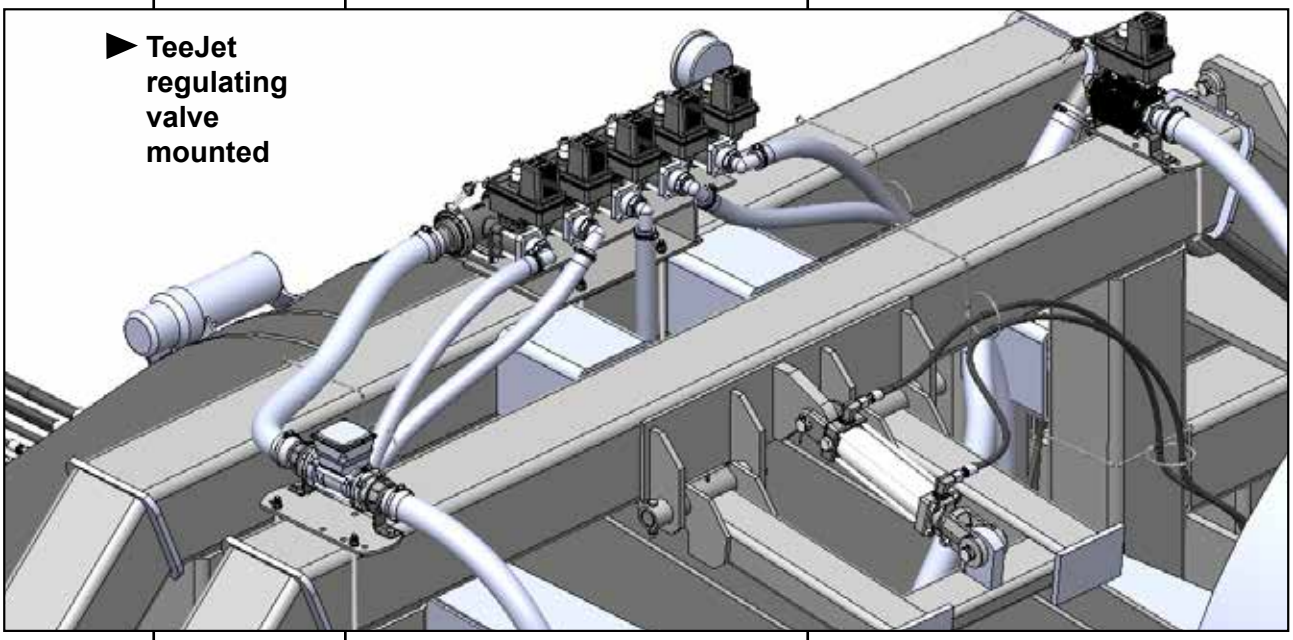

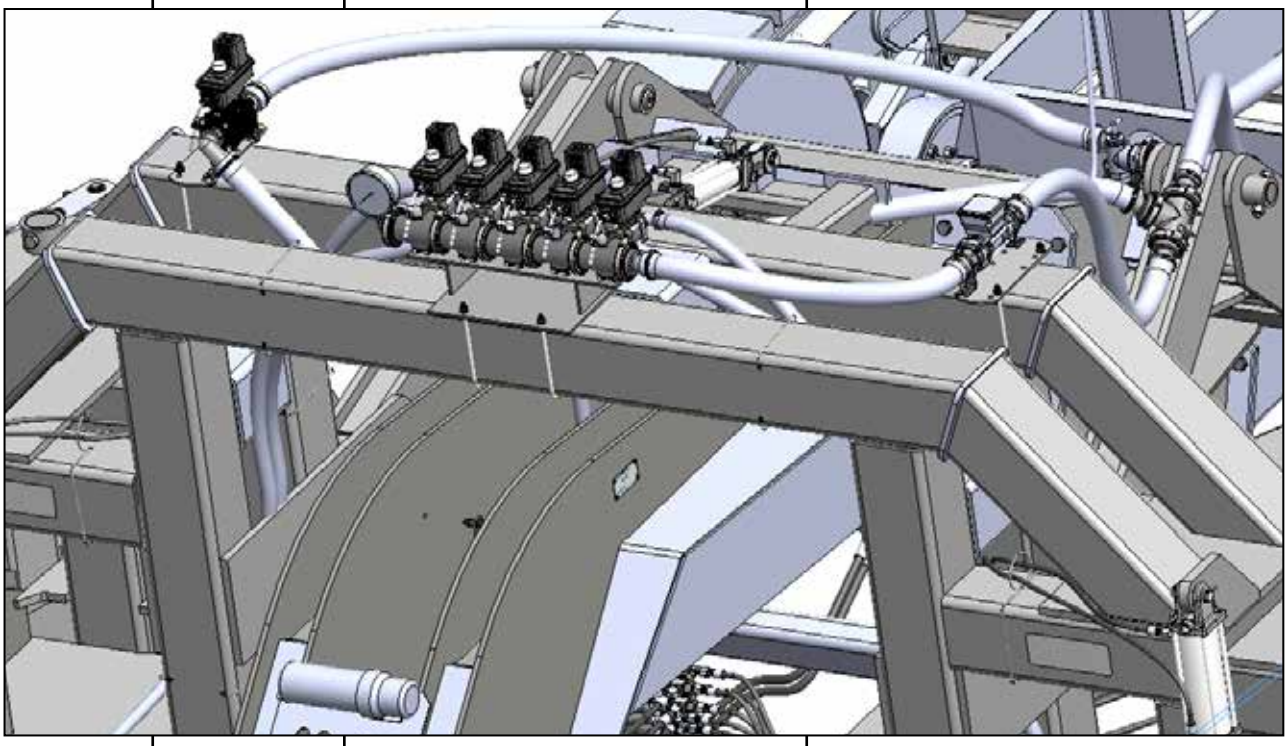

Task	Procedures	Illustrations

► **Installation of 1-1/2" hoses**

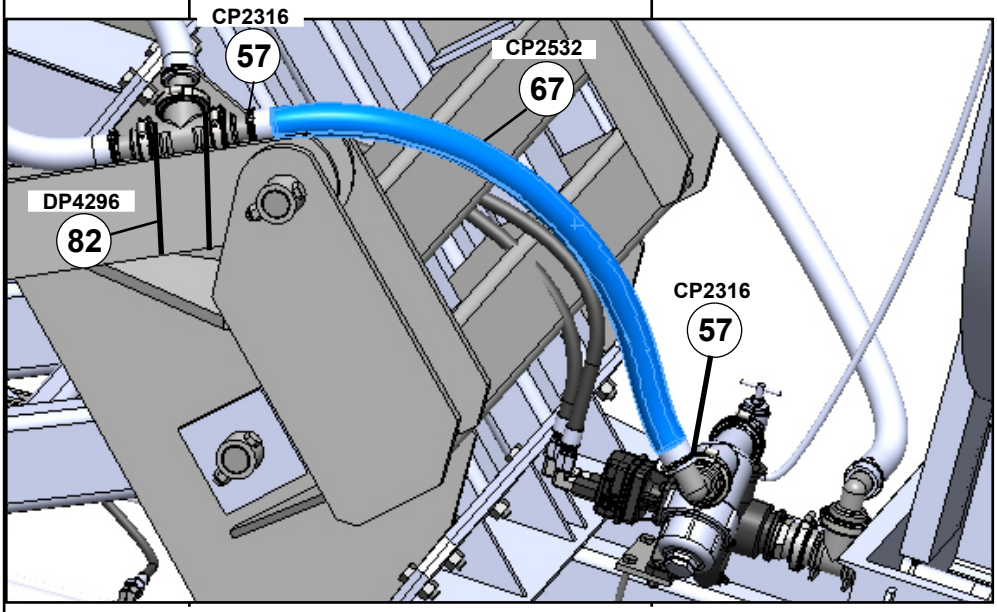

1. Measure between hose barbs. Cut (67) (CP2532) 1-1/2" EPDM hose. Place (57) (CP2316) 1-1/4"-2" worm gear hose clamps over hose and push on each hose barb. Secure (57) (CP2316) 1-1/4"-2" worm gear hose clamps on both ends.

2. Attach (31) (CP2047) 2" tee assembly to lift arm with two (82) (DP4296) 33" cable ties.

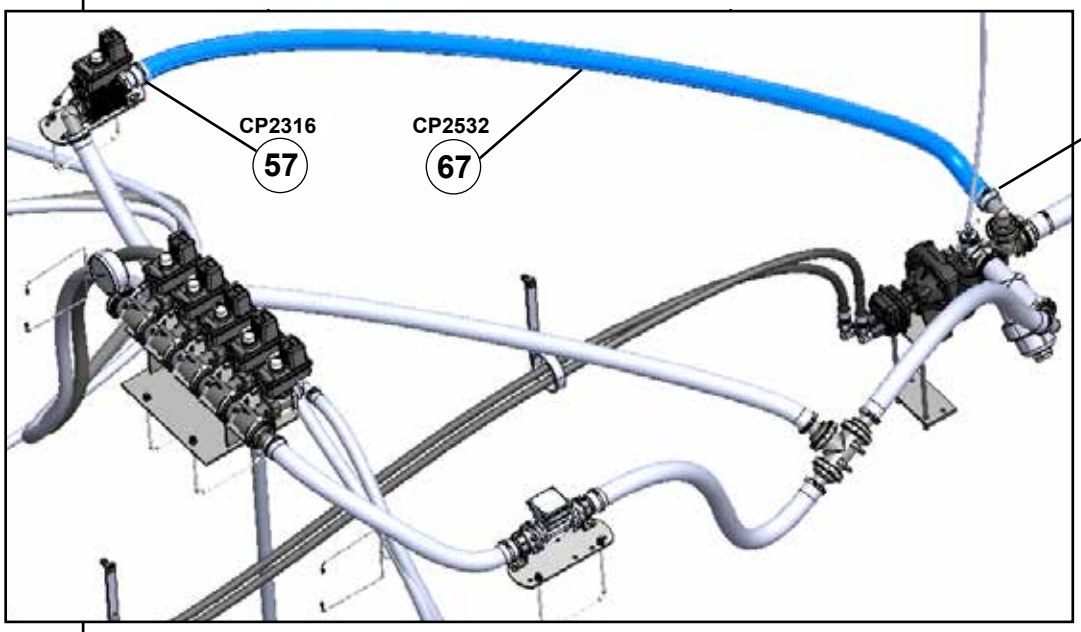

3. Measure between hose barbs. Cut (67) (CP2532) 1-1/2" EPDM hose. Place (57) (CP2316) 1-1/4"-2" worm gear hose clamps over hose and push on each hose barb. Secure (57) (CP2316) 1-1/4"-2" worm gear hose clamps on both ends.

► Installation of 1-1/2" hoses

1. Measure between hose barbs. Cut (67) (CP2532) 1-1/2" EPDM hose. Place (57) (CP2316) 1-1/4"-2" worm gear hose clamps over hose and push on each hose barb. Secure (57) (CP2316) 1-1/4" 2" worm gear hose clamps on both ends.

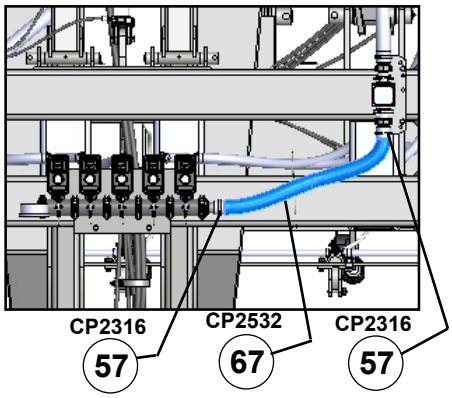

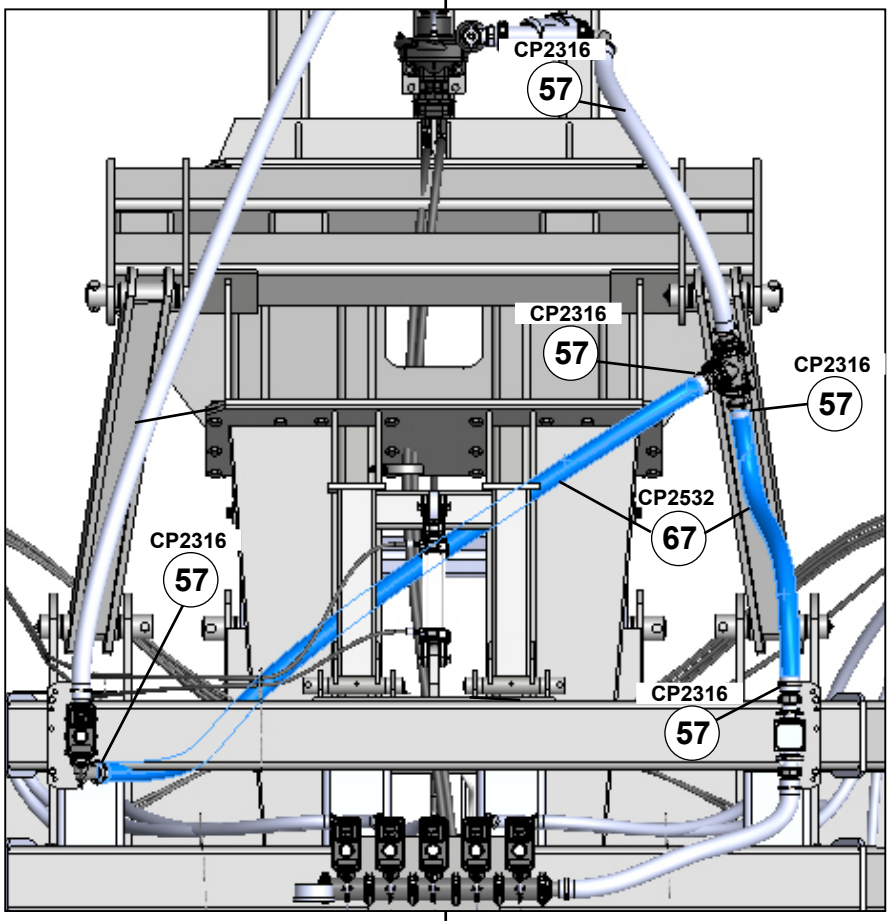

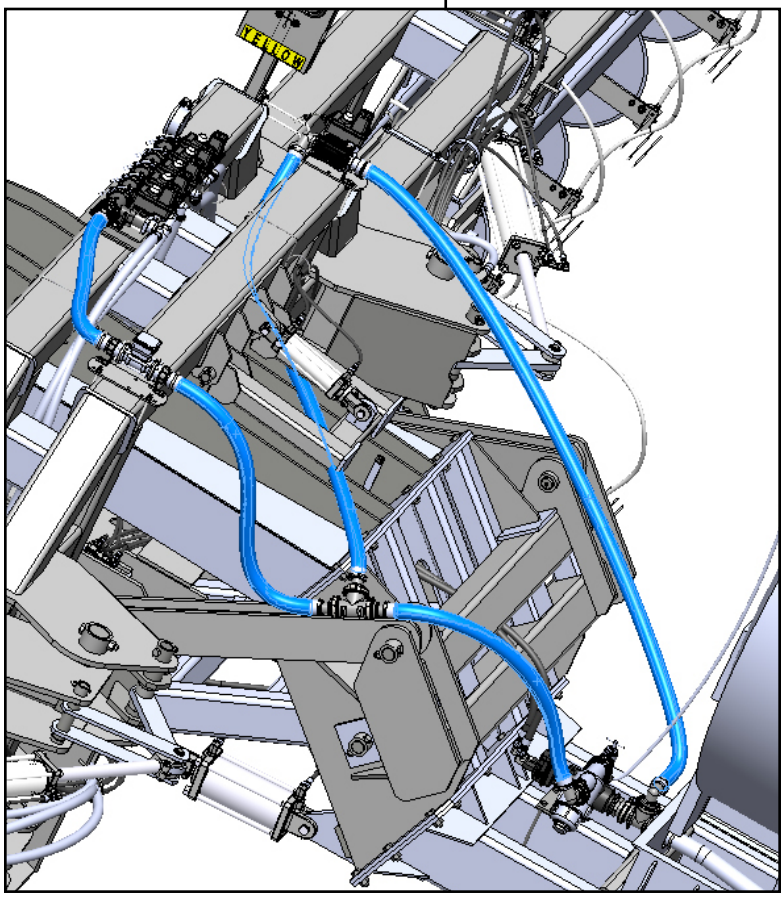

Assembly (1” Rubber Hose Third Wing)

AT7000	Task	Procedures	Illustrations

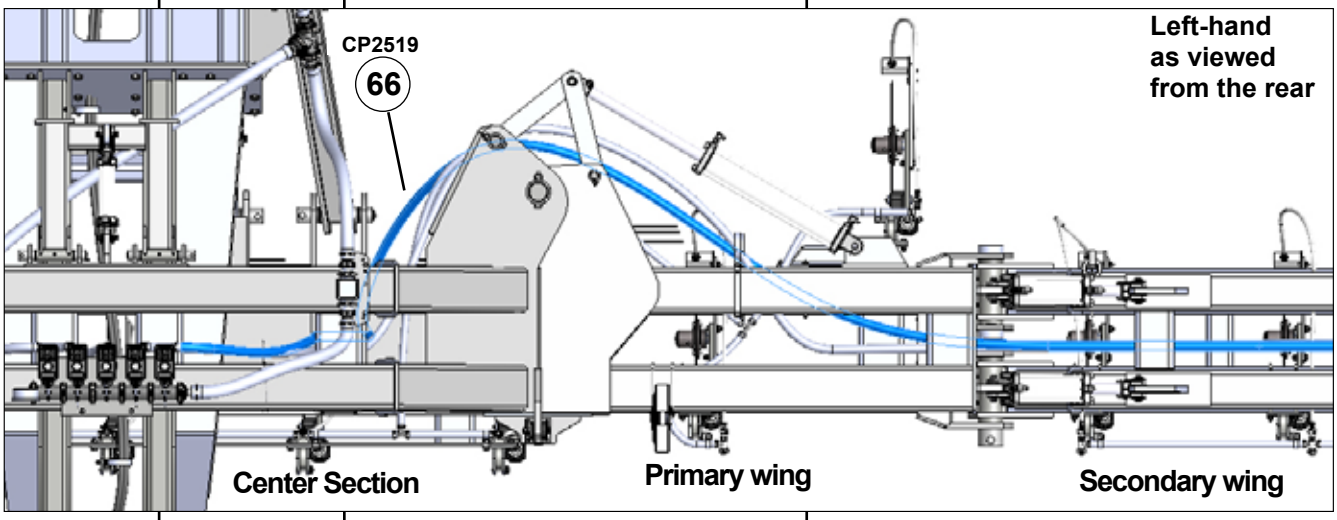

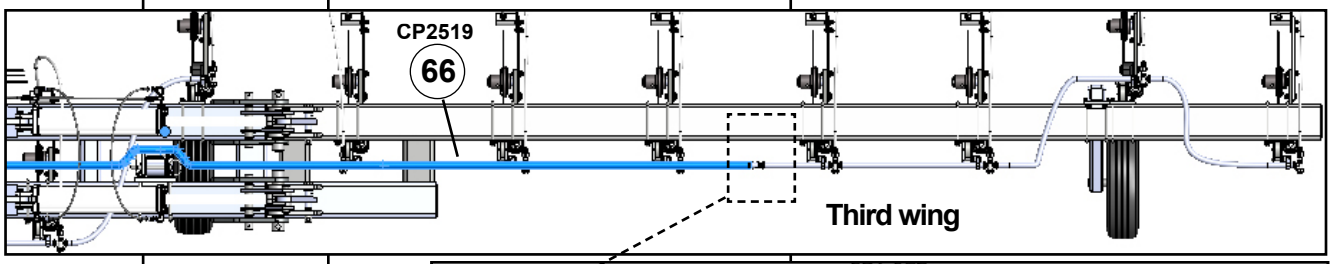

► Installation 1” rubber hose Third wing to valve manifold shutoff

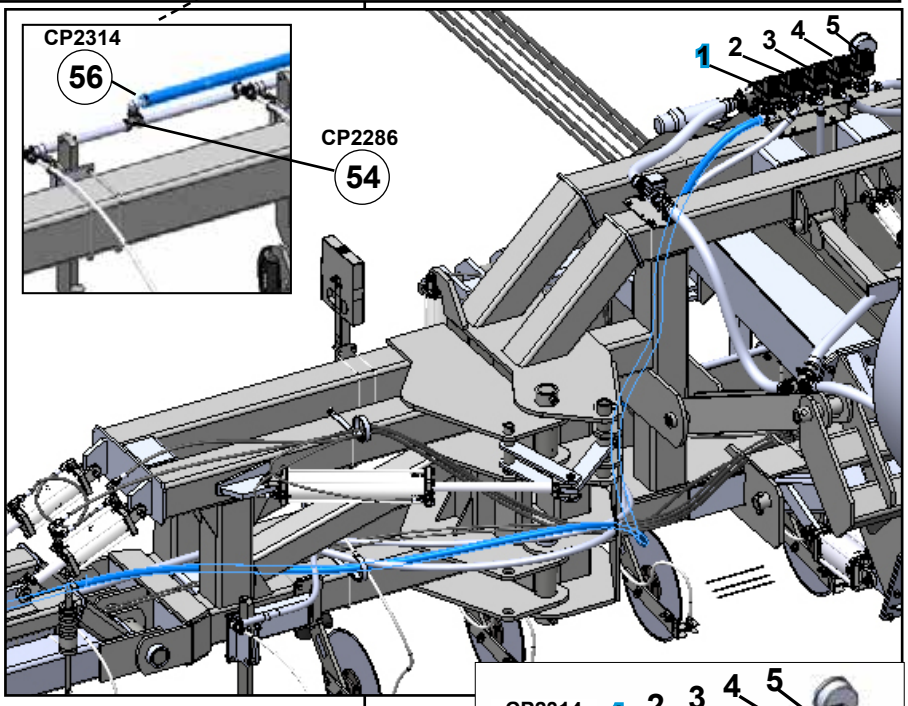

1. Place (56) (CP2314) 1/2-1” worm gear hose clamp over (66) (CP2519) 1” rubber hose and push over (52) (CP2190) 1” MP x 1” HB 90 degree elbow. Secure (56) (CP2314) 1/2-1” worm gear hose clamp.

2. Extend (66) (CP2519) 1” hose down through center, around primary wing hinge, through primary wing, through secondary and third wing frames to (54) (CP2286) 3/4”MP x 1”HB 90 degree elbow.

3. Cut hose and place (56) (CP2314) 1/2-1” worm gear hose clamp over (66) (CP2519) 1” rubber hose. Push over hose barb end of (54) (CP2286) 3/4”MP x 1”HB 90 degree elbow.
Secure (56) (CP2314) 1/2-1” worm gear hose clamp.

► **NOTE:** Right-hand and left-hand as viewed from the rear

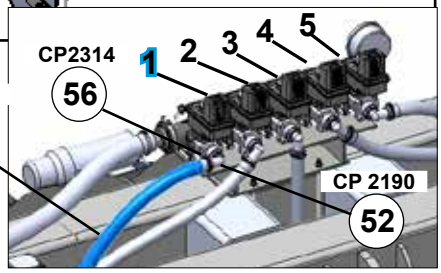

Assembly (1” Rubber Hose Secondary Wing)

AT7000	Task	Procedures	Illustrations

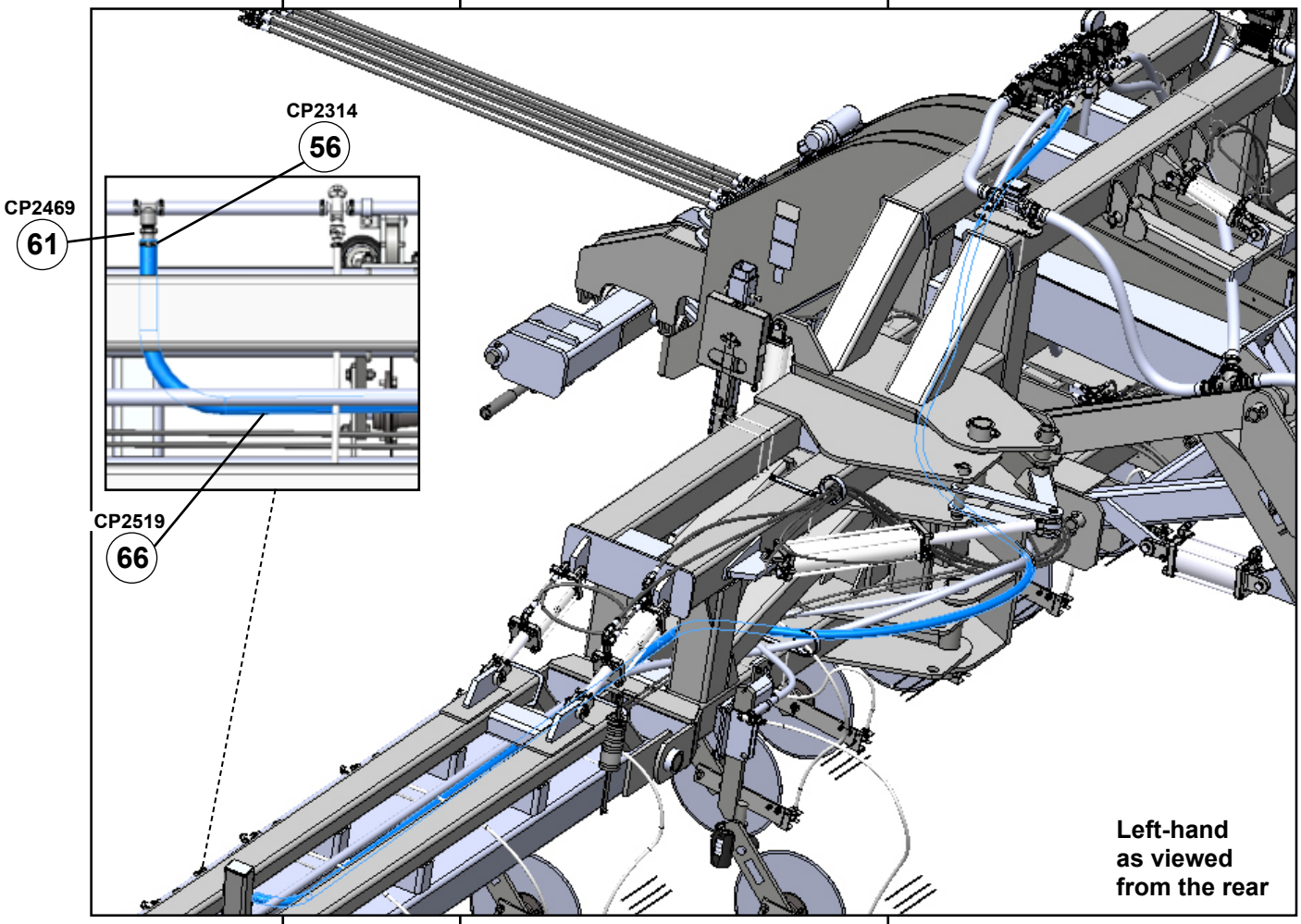

►	**Installation 1” rubber hose secondary wing to valve manifold**	1. Place (56) (CP2314) 1/2-1” worm gear hose clamp over (66) (CP2519) 1” rubber hose and push over (52) (CP2190) 1” MP x 1” HB 90 degree elbow. Secure (56) (CP2314) 1/2-1” worm gear hose clamp.
►	**NOTE:** Right-hand and left-hand as viewed from the rear	2. Extend (66) (CP2519) 1” hose down through center, around primary wing hinge, through primary and secondary wing frames to (61) (CP2469) 3/4”MP x 1”HB hose barb.
		3. Cut hose and place (56) (CP2314) 1/2-1” worm gear hose clamp over (66) (CP2519) 1” rubber hose, push on (61).
		4. Secure (56) (CP2314) 1/2-1” worm gear hose clamp.

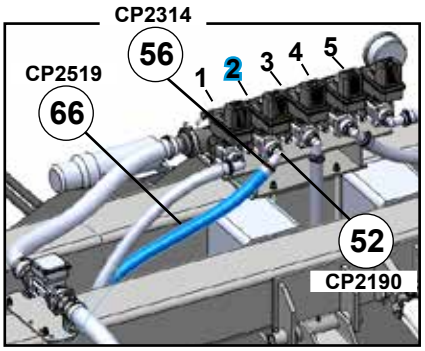

Assembly (1” Rubber Hose Center Section)

AT7000	Task	Procedures	Illustrations

► **Installation 1” rubber hose from center section to valve manifold**

► **NOTE: Right-hand and left-hand as viewed from the rear**

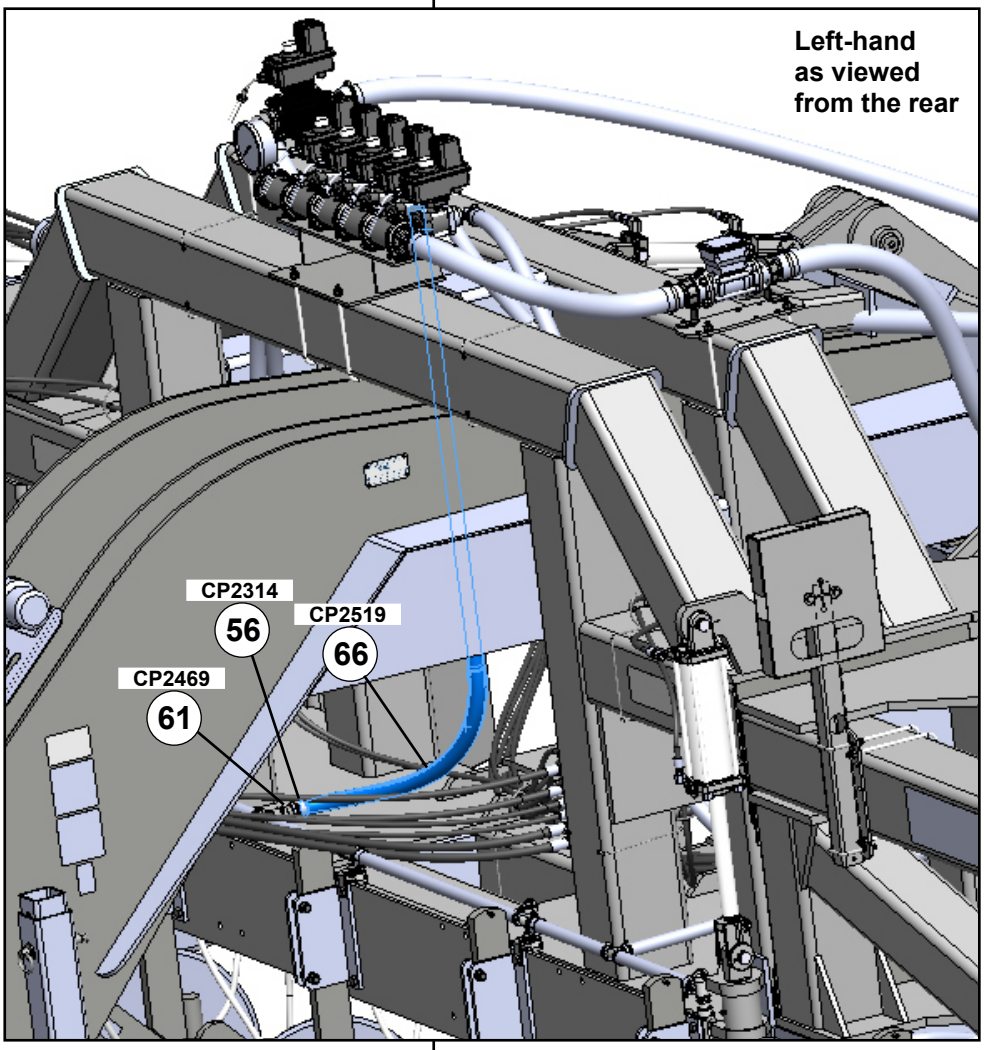

1. Place (56) (CP2314) 1/2-1” worm gear hose clamp over (66) (CP2519) 1” rubber hose and push over (52) (CP2190) 1” MP x 1” HB 90 degree elbow. Secure (56) (CP2314) 1/2-1” worm gear hose clamp.
2. Extend (66) (CP2519) 1” hose down through center to (61) (CP2469) 3/4”MP x 1”HB hose barb.
3. Cut hose and place (56) (CP2314) 1/2-1” worm gear hose clamp over (66) (CP2519) 1” rubber hose, push on (61).
4. Secure (56) (CP2314) 1/2-1” worm gear hose clamp.

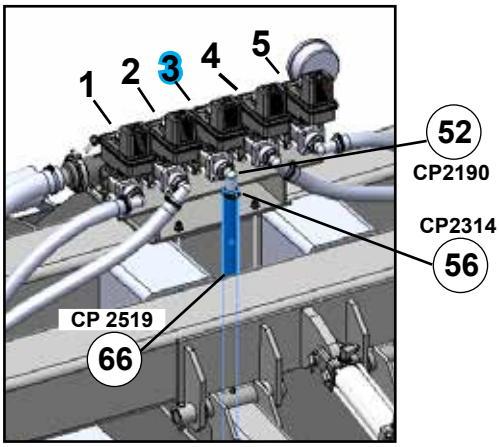

Assembly (1” Rubber Hose Secondary Wing)

AT7000	Task	Procedures	Illustrations

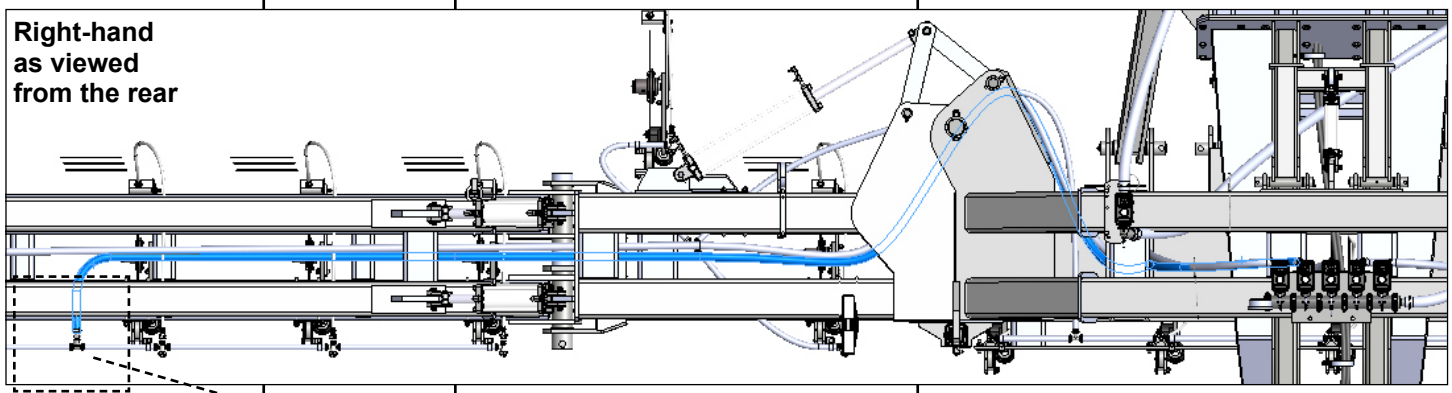

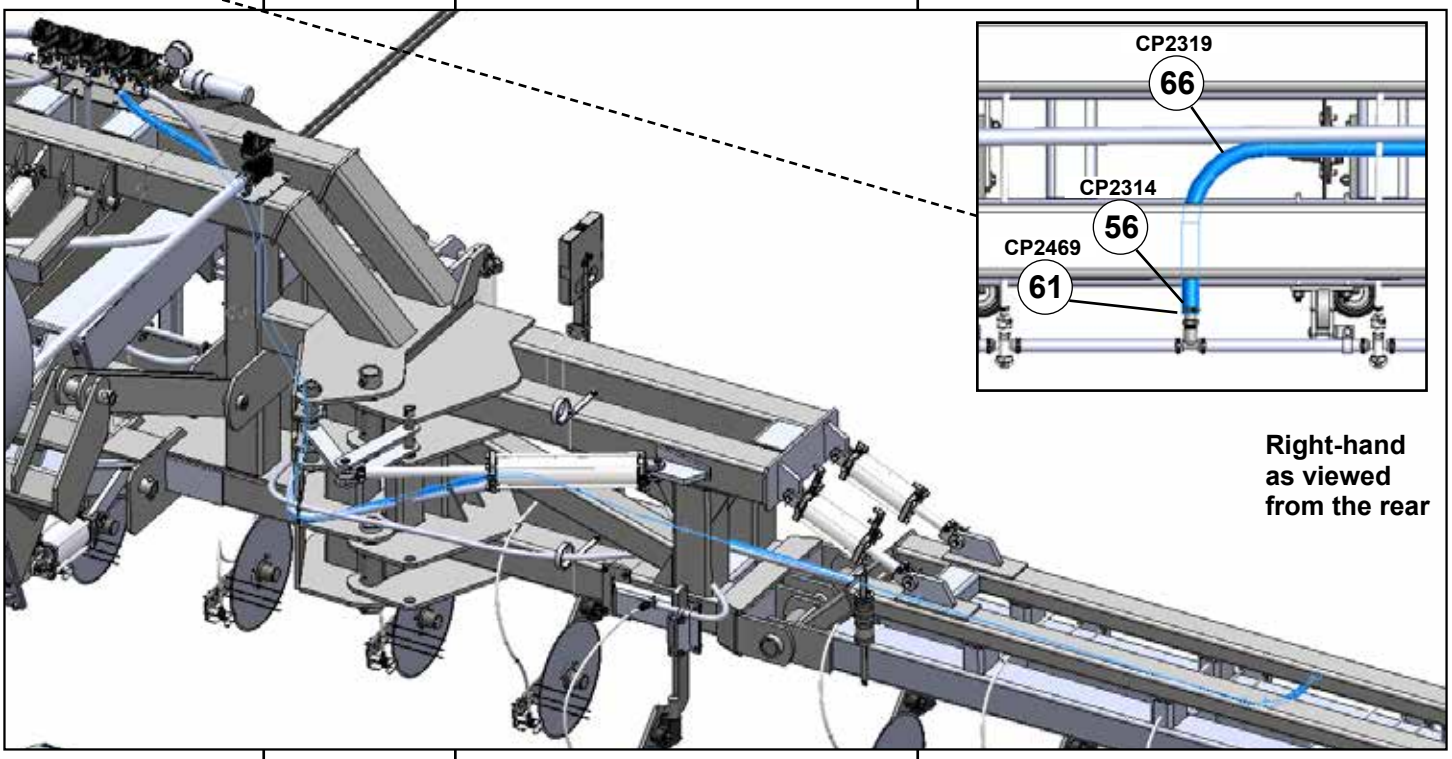

► **Installation 1” rubber hose from center section to valve manifold**

► **NOTE:** Right-hand and left-hand as viewed from the rear

1. Place (56) (CP2314) 1/2-1” worm gear hose clamp over (66) (CP2519) 1” rubber hose and push over (52) (CP2190) 1” MP x 1” HB 90 degree elbow. Secure (56) (CP2314) 1/2-1” worm gear hose clamp.
2. Extend (66) (CP2519) 1” hose down through center, around primary wing hinge, through primary and secondary wing frames to (61) (CP2469) 3/4”MP x 1”HB hose barb.
3. Cut hose and place (56) (CP2314) 1/2-1” worm gear hose clamp over (66) (CP2519) 1” rubber hose, push on (61).
4. Secure (56) (CP2314) 1/2-1” worm gear hose clamp.

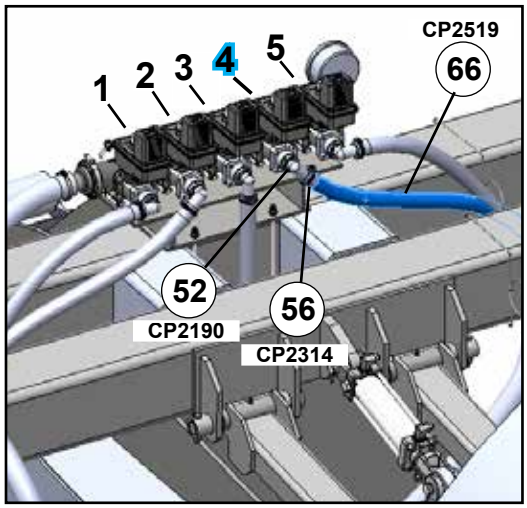

Assembly (1” Rubber Hose Third Wing)

AT7000	Task	Procedures	Illustrations

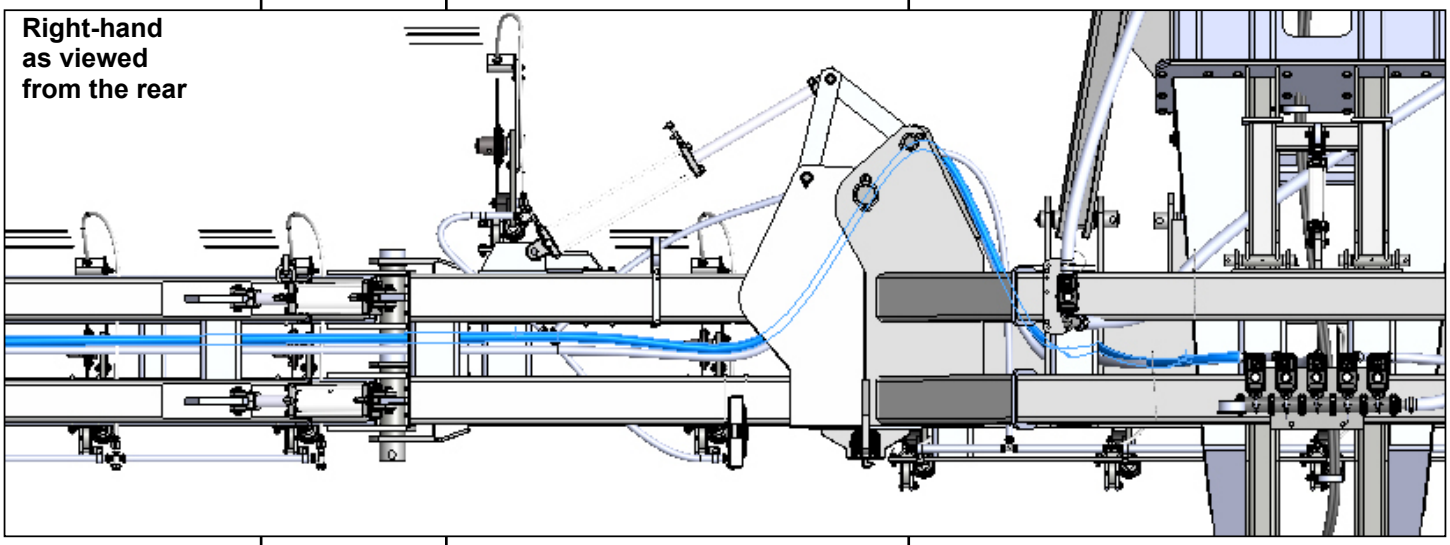

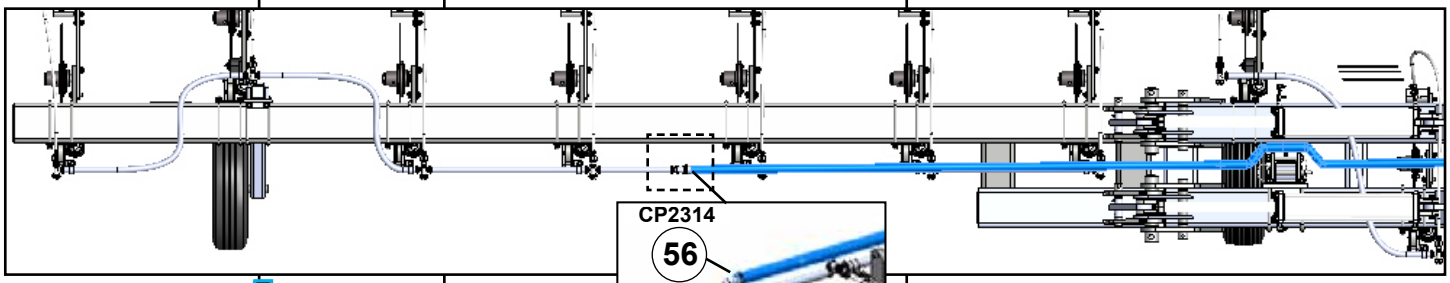

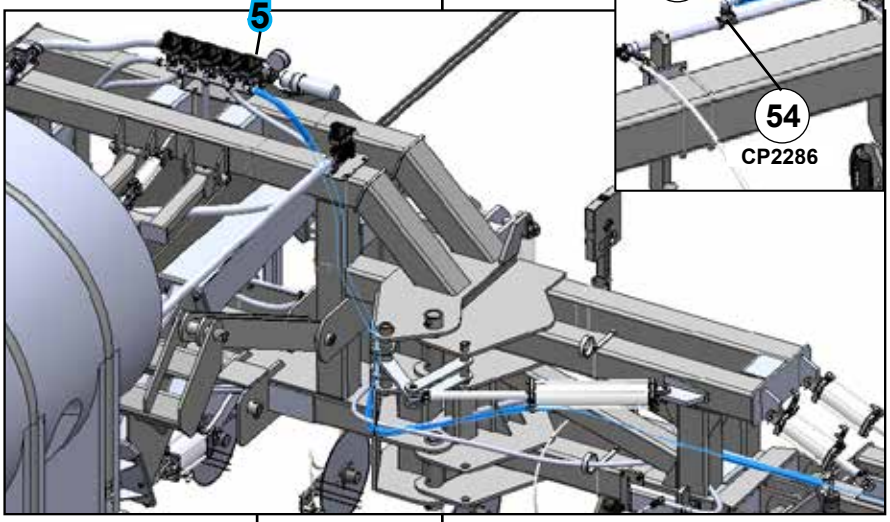

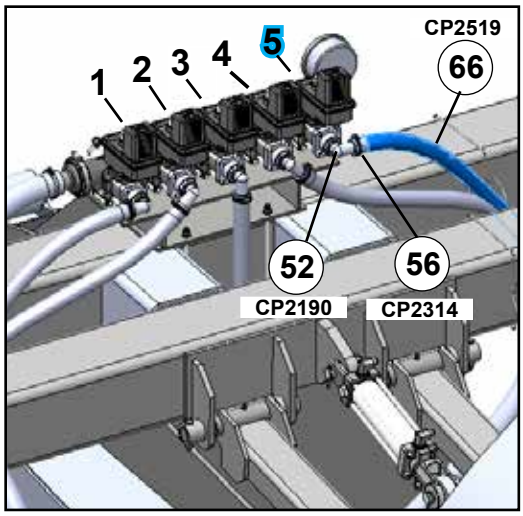

► Installation 1” rubber hose from center section to valve manifold

► **NOTE:** Right-hand and left-hand as viewed from the rear

1. Place (56) (CP2314) 1/2-1” worm gear hose clamp over (66) (CP2519) 1” rubber hose and push over (52) (CP2190) 1” MP x 1” HB 90 degree elbow. Secure (56) (CP2314) 1/2-1” worm gear hose clamp.

2. Extend (66) (CP2519) 1” hose down through center, around primary wing hinge, through primary wing, through secondary and third wing frames to (54) (CP2286) 3/4”MP x 1”HB 90 degree elbow.

3. Cut hose and place (56) (CP2314) 1/2-1” worm gear hose clamp over (66) (CP2519) 1” rubber hose. Push over hose barb end of (54) (CP2286) 3/4”MP x 1”HB 90 degree elbow.
Secure (56) (CP2314) 1/2-1” worm gear hose clamp.

Assembly (Centrifugal Pump Hydraulic Hoses)

AT7000	Task	Procedures	Illustrations

▶ **Centrifugal pump hydraulic hoses**

▶ **NOTE:** Right-hand and left-hand as viewed from the rear

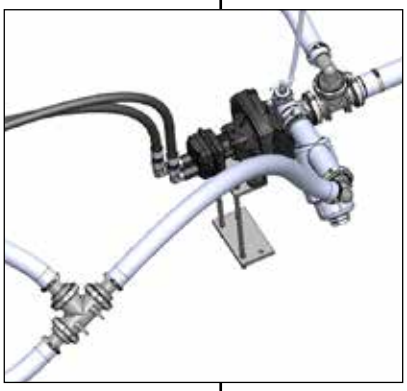

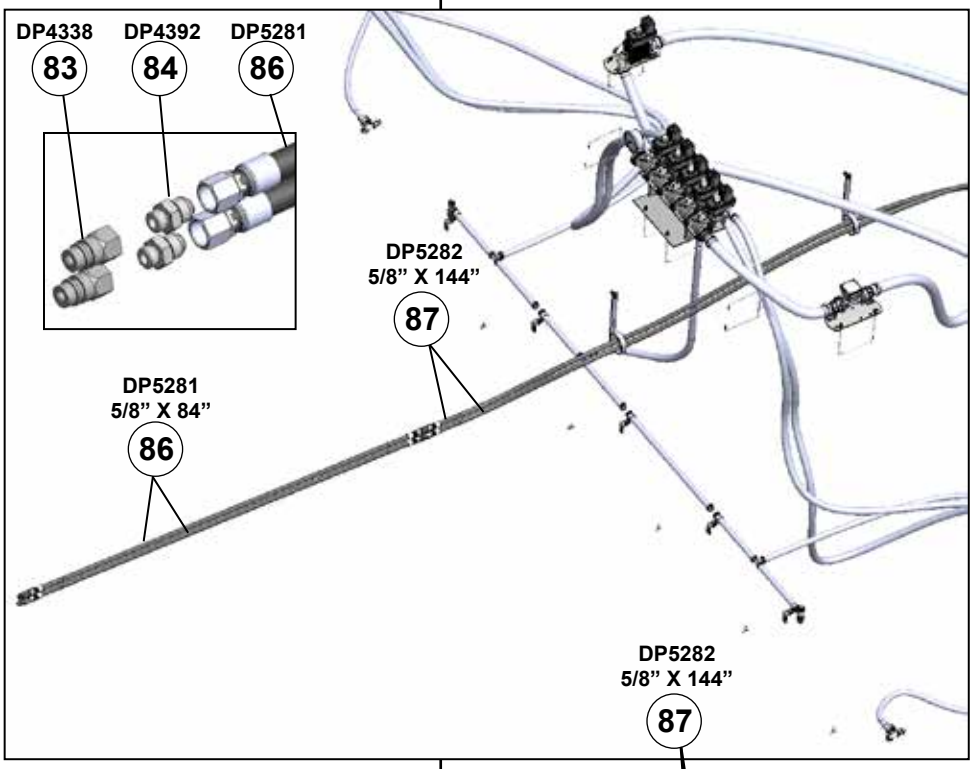

1. Attach (87) (DP5282) 5/8" x 144" (12') 10FJX-10FJX hydraulic hose to left-hand from the rear pump port. Extend hose through frame and hose holders to ***bottom*** (DP5220) 10MJ-10MJ bulkhead union and attach.
2. Attach (87) (DP5282) 5/8" x 144" (12') 10FJX-10FJX hydraulic hose to right-hand from the rear pump port. Extend hose through frame and hose holders to ***top*** (DP5220) 10MJ-10MJ bulkhead union and attach.
3. Attach (86) (DP5281) 5/8" x 84" (7') 10FJX-10FJX hydraulic hoses to (DP5220) 10MJ-10MJ bulkhead unions.
4. Install (84) (DP4392) 8MSAE-10MJIC straight adapters to each hose.
5. Install (83) (DP4338) 8FSAE pioneer nipples to (84) straight adapters.

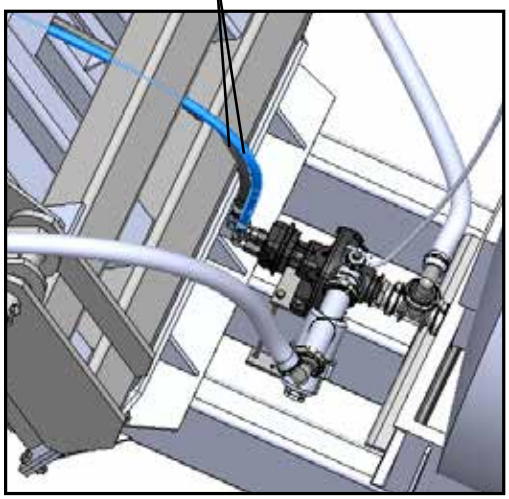

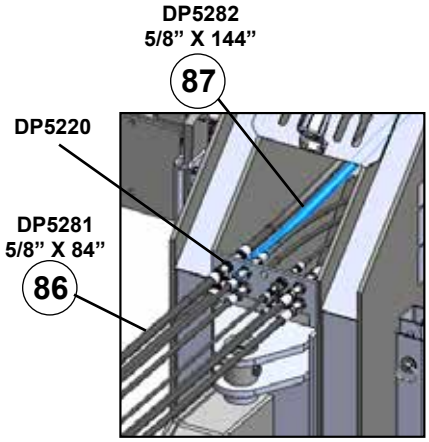

Storage

Task	Procedures	Illustrations

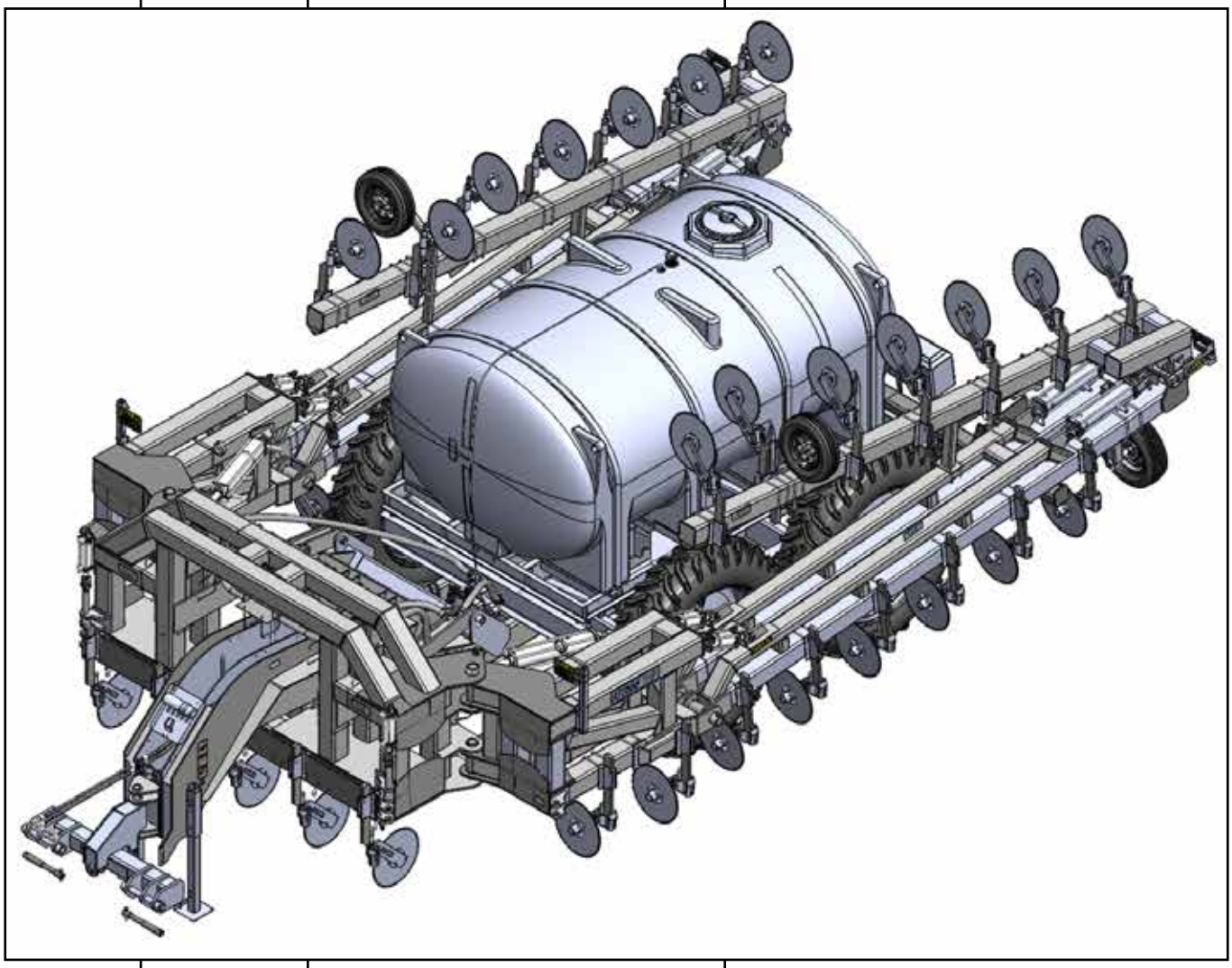

Task	Procedures
► **Preparing for storage**	**A. Store the machine in a dry place. If the storage building has a dirt floor, lower the park stands and support the stand with a board to prevent the stand from entering the ground.** **B. Scrape or brush off any dirt on the machine and remove all trash.** **C. Relieve pressure from hydraulic circuits. Heat from the sun can cause hydraulic systems to become over pressurized and cause hoses or components to burst.** **D. Before storing, apply grease to all hydraulic cylinder rods to prevent rust or store with cylinders retracted if possible.** **E. Place hydraulic hose ends in tongue hose holders.** **F. Paint any surface that can rust.** **G. Lubricate all grease fittings.** **H. Inspect the machine for worn or broken parts and replace the parts as needed.**
► **Removing from storage**	**A. Remove the protective grease from the hydraulic cylinder rods.** **B. Assemble any parts taken off for storage or reconditioning.** **C. Check the complete machine for loose bolts and cotter pins. Check for parts out of adjustment which could result in rapid wear, possible breaking and poor operation.** **D. Lubricate the complete machine.** **E. Check tires for correct air pressure.** **F. Check wheel bolt torque.** **G. Check tracks for proper operation.**